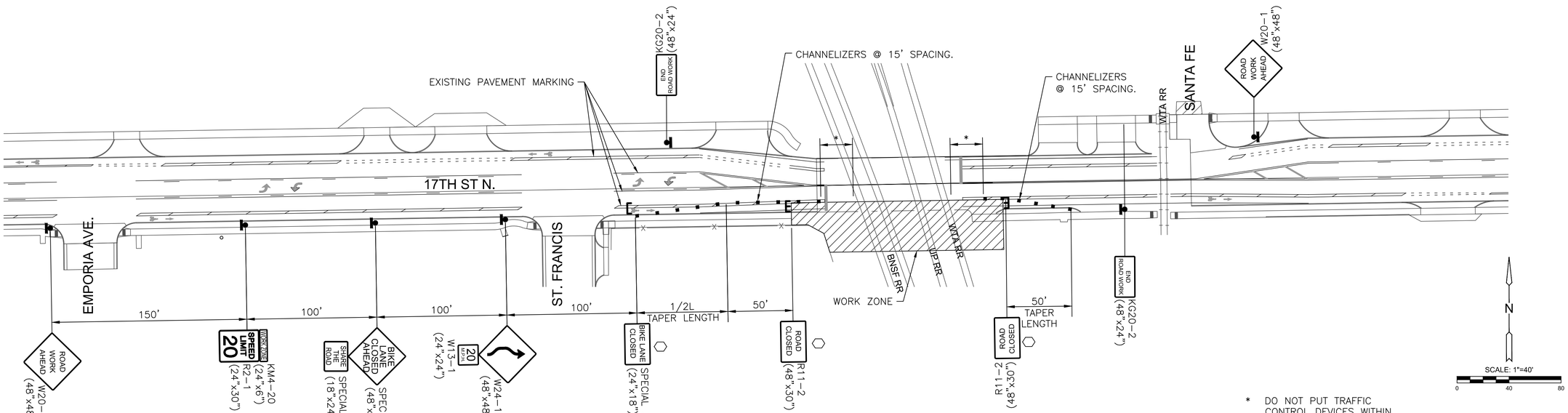

EASTBOUND TRAFFIC CONTROL PLAN

* DO NOT PUT TRAFFIC CONTROL DEVICES WITHIN 25' OF RAILROAD TRACKS.

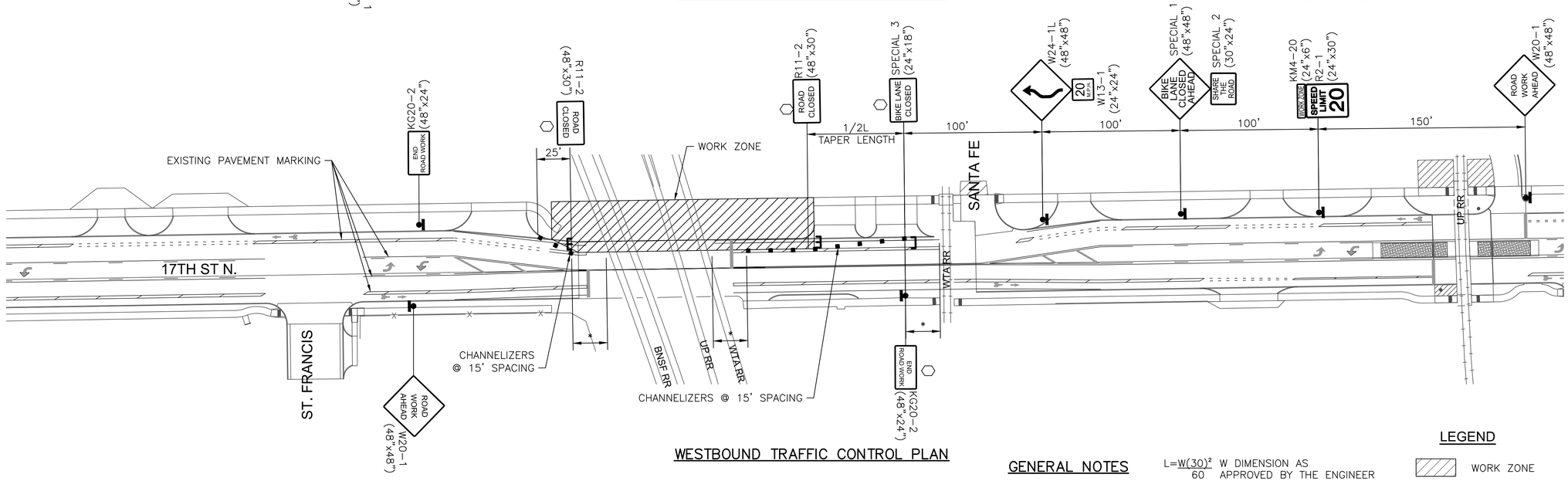

WESTBOUND TRAFFIC CONTROL PLAN

GENERAL NOTES

$L=\frac{W(30)^2}{60}$ W DIMENSION AS APPROVED BY THE ENGINEER

WORK ZONE AREA INCLUDING ENCROACHMENT INTO DRIVING LANE (W) TO BE APPROVED BY THE ENGINEER.

MAINTAIN A MINIMUM 10' WIDE DRIVING LANE AT ALL TIMES. IN NO INSTANCE MAY THE CENTERLINE BE SHIFTED.

GENERAL NOTES APPLY TO BOTH EAST BOUND AND WEST BOUND TRAFFIC CONTROL PLANS.

WORK ZONE SHALL BE LIMITED TO A SINGLE SIDE OF ROADWAY AT ANY ONE TIME.

TRAFFIC CONTROL SHALL BE INSTALLED DURING WORKING HOURS ONLY. REMOVE DURING NIGHT AND NON-CONSTRUCTION PERIODS.

UTILIZE TE720 WHEN WORK IS LIMITED TO OFF-STREET AREAS.

MAINTAIN ACCESS TO ALL PROPERTIES AT ALL TIMES.

LEGEND

- WORK ZONE
- TRAFFIC FLOW
- TYPE 3 BARRICADE
- TYPE 2 BARRICADE
- TYPE A LIGHT
- SIGN
- MOUNT ON BARRICADE

MKEC
Wichita, KS • 316.684.9600

PAVING PLANS FOR

17TH STREET SIDEWALK AT RR CROSSING 009266P

WICHITA, KANSAS

TRAFFIC CONTROL PLAN

PROJECT NO. 472-2025-086149

SCALE 1"=40'

DRAWN	DESIGNED	CHECKED
RAM	JRA	

NO.	REVISION	DATE

SHEET NO. 11 OF 16

© 2025 MKEC ENGINEERING, INC. ALL RIGHTS RESERVED WWW.MKEC.COM THESE DRAWINGS AND THEIR CONTENTS, INCLUDING, BUT NOT LIMITED TO, ALL CONCEPTS, DESIGNS & IDEAS ARE THE EXCLUSIVE PROPERTY OF MKEC ENGINEERING, INC. (MKEC), AND MAY NOT BE USED OR REPRODUCED IN ANY WAY WITHOUT THE EXPRESS CONSENT OF MKEC.

J:\PROJECTS\2022\2201016593_PH 5700_17TH SIDEWALK\00 220593 CAD\SHTS\05 CIVIL\TRAFFIC\220593_TRAFFIC CONTROL PLAN.DWG

PLOTTED: Friday, March 21, 2025 @ 8:03 PM