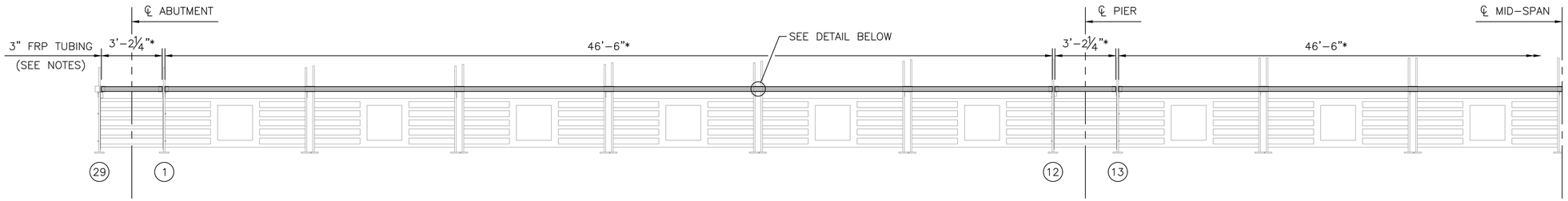

RUBRAIL PART ELEVATION
(LOOKING NORTH OR SOUTH AT FACE OF RAIL)

* ASSEMBLED FRP TUBING SECTION LENGTHS (SEE NOTE 1)

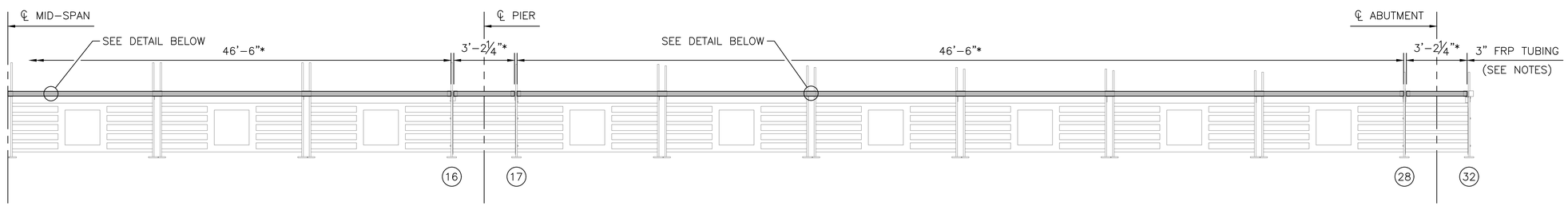

RUBRAIL PART ELEVATION
(LOOKING NORTH OR SOUTH AT FACE OF RAIL)

LEGEND

(#) POSTS

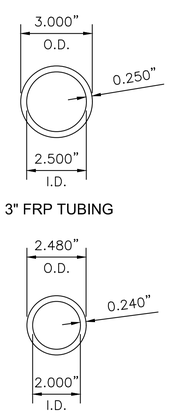

RUBRAIL TYPICAL SECTION

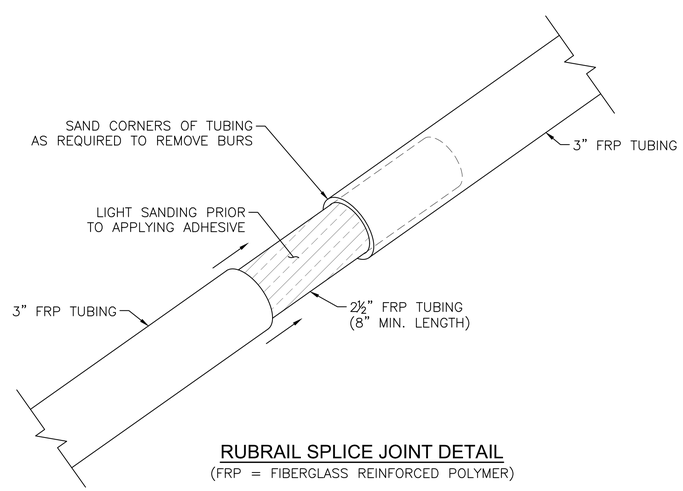

RUBRAIL SPLICE JOINT DETAIL
(FRP = FIBERGLASS REINFORCED POLYMER)

NOTES:

1. DIMENSIONS PROVIDED IN PART ELEVATIONS ARE FOR INFORMATION ONLY. ASSEMBLED PIECE LENGTHS REQUIRED WILL VARY DEPENDING ON CONSTRUCTION TOLERANCES IN FABRICATION, EMBEDDED RAIL ANCHORS, ETC.
2. FRP TUBING TO BE ORDERED IN LENGTHS AS REQUIRED TO LOCATE SPLICE JOINTS WITHIN THE LIMITS OF RUBRAIL SLEEVES. NO ASSEMBLED PIECE SHALL HAVE MORE THAN 2 SPLICES, NOR USE ANY SINGLE SECTION OF FRP LESS THAN 15'–6" IN LENGTH.
3. FRP ADHESIVE TO BE PLIOGRIP 7773 POLYURETHANE (OR APPROVED EQUAL)
4. ALL FRP TUBING TO BE PAINTED BLACK TO MATCH OTHER PAINTED SURFACES ON THE PROJECT WITH AN EPOXY–BASED OR POLYESTER–BASED COATING INTENDED FOR OUTDOOR USE. CONSULT WITH THE FRP MANUFACTURER FOR RECOMMENDATIONS. TUBING SHALL BE PAINTED PRIOR TO INSTALLATION.
5. INSTALLATION OF FRP RUBRAIL WILL NEED TO OCCUR SIMULTANEOUSLY WITH INSTALLATION OF RAILING SECTIONS.

MKEC
Wichita, KS • 316.684.9600

IMPROVEMENT PLANS FOR
15TH STREET BRIDGE OVER THE WICHITA DRAINAGE CANAL
WICHITA, KS

FRP TUBING DETAILS

PROJECT NO. 472-2023-085864
SCALE NTS

DRAWN	DESIGNED	CHECKED
RAM	DMU	JRA

NO.	REVISION	DATE
0	ISSUED FOR CONSTRUCTION	8-1-2025

SHEET NO.
71 OF 114

©2025 MKEC ENGINEERING, INC. ALL RIGHTS RESERVED WWW.MKEC.COM THESE DRAWINGS AND THEIR CONTENTS, INCLUDING, BUT NOT LIMITED TO, ALL CONCEPTS, DESIGNS, & IDEAS ARE THE EXCLUSIVE PROPERTY OF MKEC ENGINEERING, INC. (MKEC), AND MAY NOT BE USED OR REPRODUCED IN ANY WAY WITHOUT THE EXPRESS CONSENT OF MKEC.

J:\PROJECTS\2023\2010\1451_COW_WDC BRIDGE REPLACEMENT AT 15TH STREET\00 230431 CAD\SHTS\05 CIVIL\BRIDGE\BRIDGE RAIL\230431_RUBRAIL DETAILS.DWG

PLOTTED: Friday, August 01, 2025 @ 03:31PM