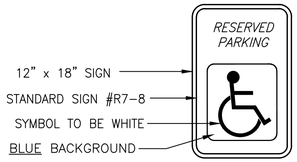

NOTES:
1. ALL SIGNS TO BE 0.080" THICK ALUMINUM
2. ALL SIGNS SHALL CONFORM WITH ALL CURRENT A.D.A., FEDERAL, STATE AND LOCAL CODES AND REGULATIONS.
3. ONE AT EACH HANDICAP STALL

HANDICAPPED PARKING SIGN

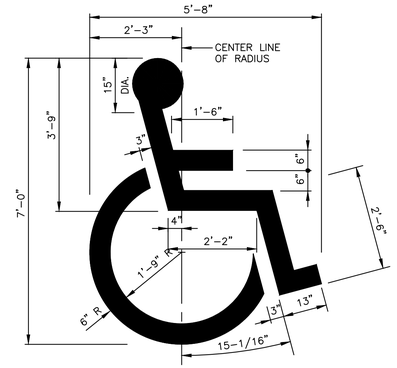

HANDICAP PAVEMENT MARKING

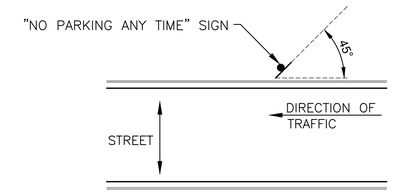

NO PARKING SIGN INSTALLATION

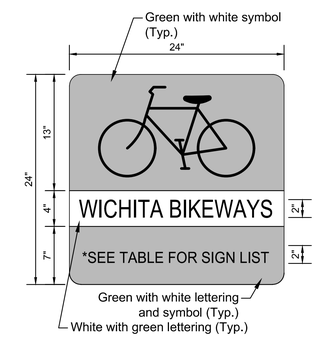

SIGN W - WAYFINDING SIGN

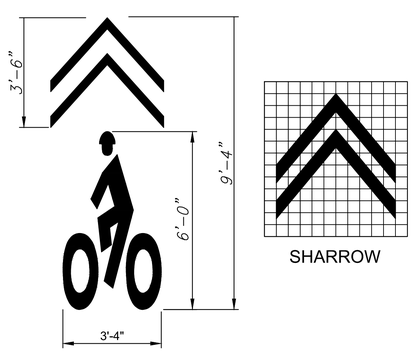

SHARED LANE MARKING

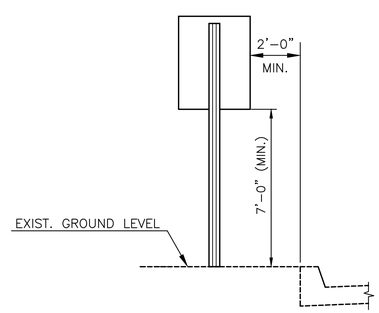

SIGN INSTALLATION - CURBED STREET

NOTE: IF SIGN IS TO BE INSTALLED ADJACENT TO A NON-CURB STREET, ADJUSTMENTS MAY NEED TO BE MADE TO SIGN HEIGHT AND LOCATION AS DIRECTED BY THE ENGINEER.

WAYFINDING SIGN INFORMATION

SIGN DESIGNATION	WAYFINDING SIGN LOCATION	SIDE	TEXT	
A	STATION 45+50	Rt.	↑	I-135 Path
B	STATION 48+90	Rt.	← →	I-135 Path
C	STATION 49+15	Lt.	↑	McAdams Park
			← →	I-135 Path
D	STATION 51+60	Lt.	↑	McAdams Park
				I-135 Path
E	STATION	Lt.	→	McAdams Park
F	STATION	Rt.	←	McAdams Park

MKEC
Wichita, KS • 316.684.9600

IMPROVEMENT PLANS FOR
15TH STREET BRIDGE OVER THE WICHITA DRAINAGE CANAL
WICHITA, KS

SIGNING AND PAVEMENT MARKING DETAILS

PROJECT NO. 472-2023-085864
SCALE AS NOTED

DRAWN	DESIGNED	CHECKED
LWG	JRA	JRA

NO.	REVISION	DATE
0	ISSUED FOR CONSTRUCTION	8-1-2025

SHEET NO.
90 OF 114

©2025 MKEC ENGINEERING, INC. ALL RIGHTS RESERVED WWW.MKEC.COM. THESE DRAWINGS AND THEIR CONTENTS, INCLUDING, BUT NOT LIMITED TO, ALL CONCEPTS, DESIGNS, & IDEAS ARE THE EXCLUSIVE PROPERTY OF MKEC ENGINEERING, INC. (MKEC), AND MAY NOT BE USED OR REPRODUCED IN ANY WAY WITHOUT THE EXPRESS CONSENT OF MKEC.

J:\PROJECTS\2023\2010\1431_COW_WDC BRIDGE REPLACEMENT AT 15TH STREET\00.230431 CAD\SHTS\05 CIVIL\PAV\230431_SIGN DETAILS.DWG
PLOTTED: Friday, August 01, 2025 @ 03:32PM