B.M. S.W. Cor. Conc. Porch Hse #2112 So Osage 1016.65
Baseline = N.L. of Rita

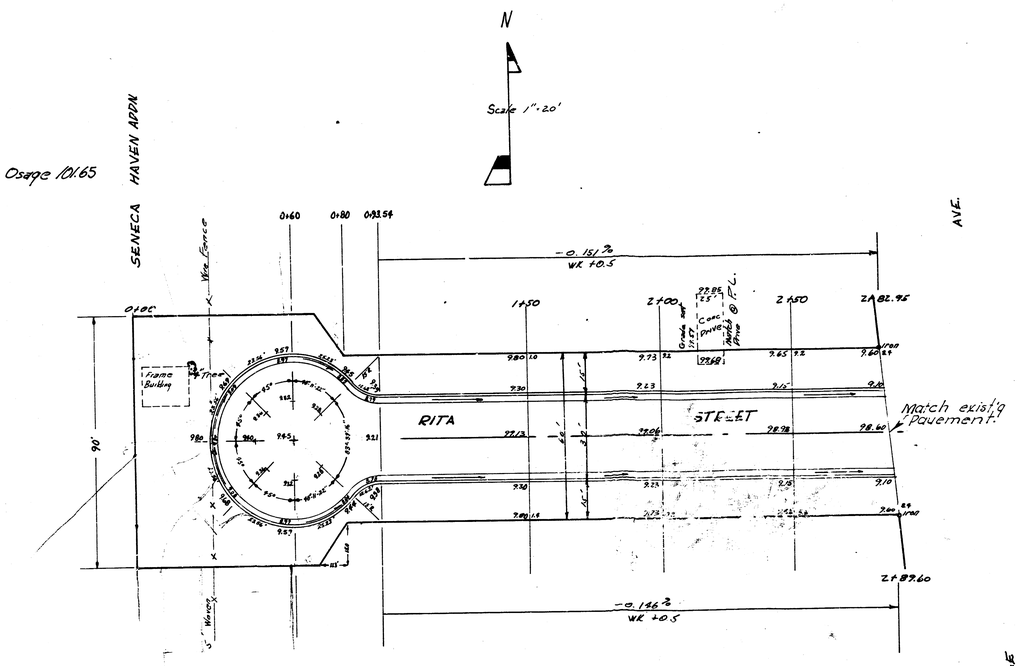

Survey Notes Pg. 174-1
Flush Miller 6-8-8
Exc.
Checked

NOTES TO FIELD ENGINEER & CONTRACTOR

1. Any drives built to serve property west of the west line of Lot 1, Blk. 3, Seneca Haven Addn., must be paid cash to the contractor.

2. Field engineer to determine walk grade @ cul-de-sac.

3. Take re-"x" sections to determine earthwork quantities @ cul-de-sac.

PROPERTY EARTHWORK TOTALS

213.01 Cu. Yds. Prop. Cut
110% 21.3
234.8 Cu. Yds. Prop. Cut

4.2 Cu. Yds. Prop. Fill
+10% .4
4.6 Cu. Yds. Prop. Fill

JAMES H. FOLSOM 2012 KANSAS PROFESSIONAL ENGINEER

JOHN W. EPPERSON LICENSED 531 KANSAS PROFESSIONAL ENGINEER

B.E. SMITH LICENSED 436 KANSAS PROFESSIONAL ENGINEER

1/2

RITA STREET
W.L. Lot 1 Blk. 3 Seneca Haven Addn. - W.L. OSAGE
26-2-30 A.C.
CITY OF WICHITA, KANSAS
B.E. SMITH CITY ENGINEER
DATE MAY 1969, PROJ. NO. C17-22