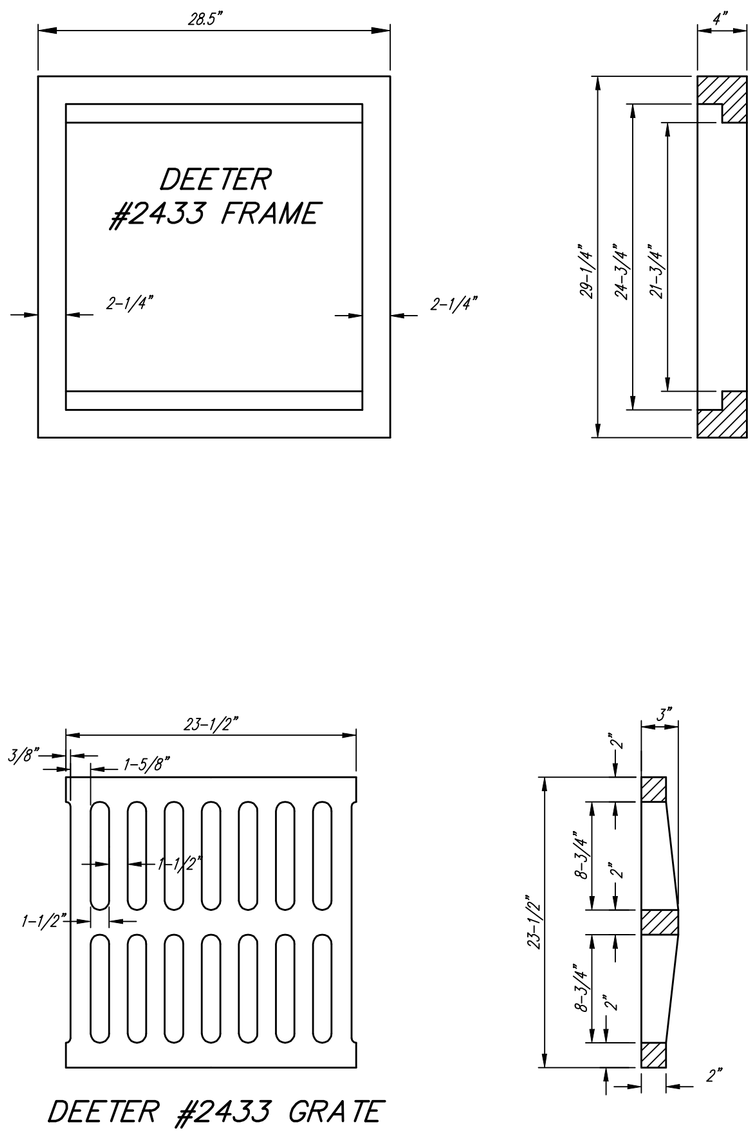

24" x 24" Frame and Grate Detail

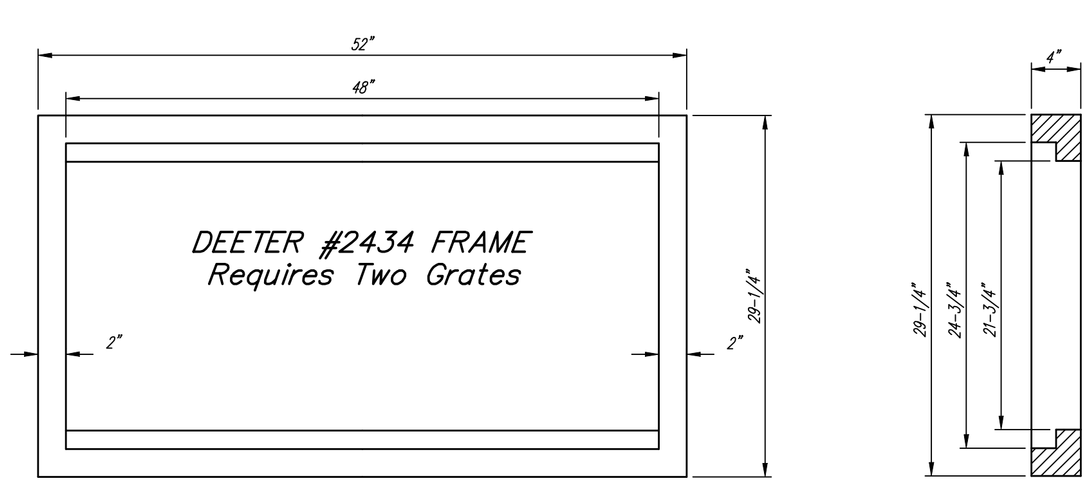

Double 24" x 24" Frame Detail

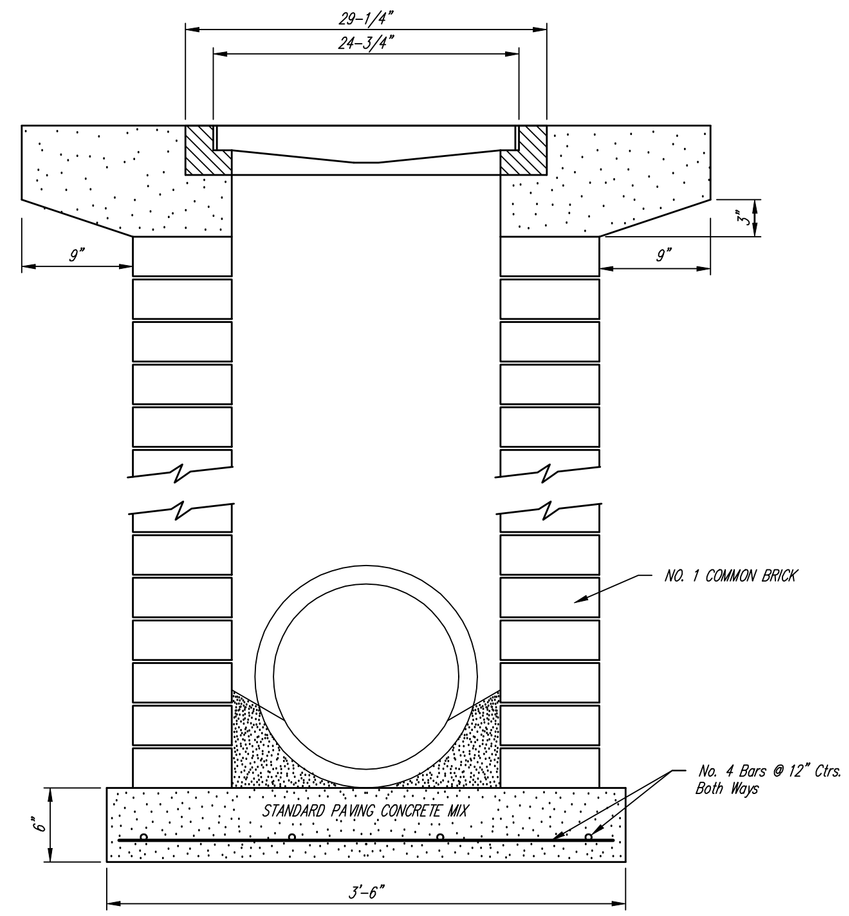

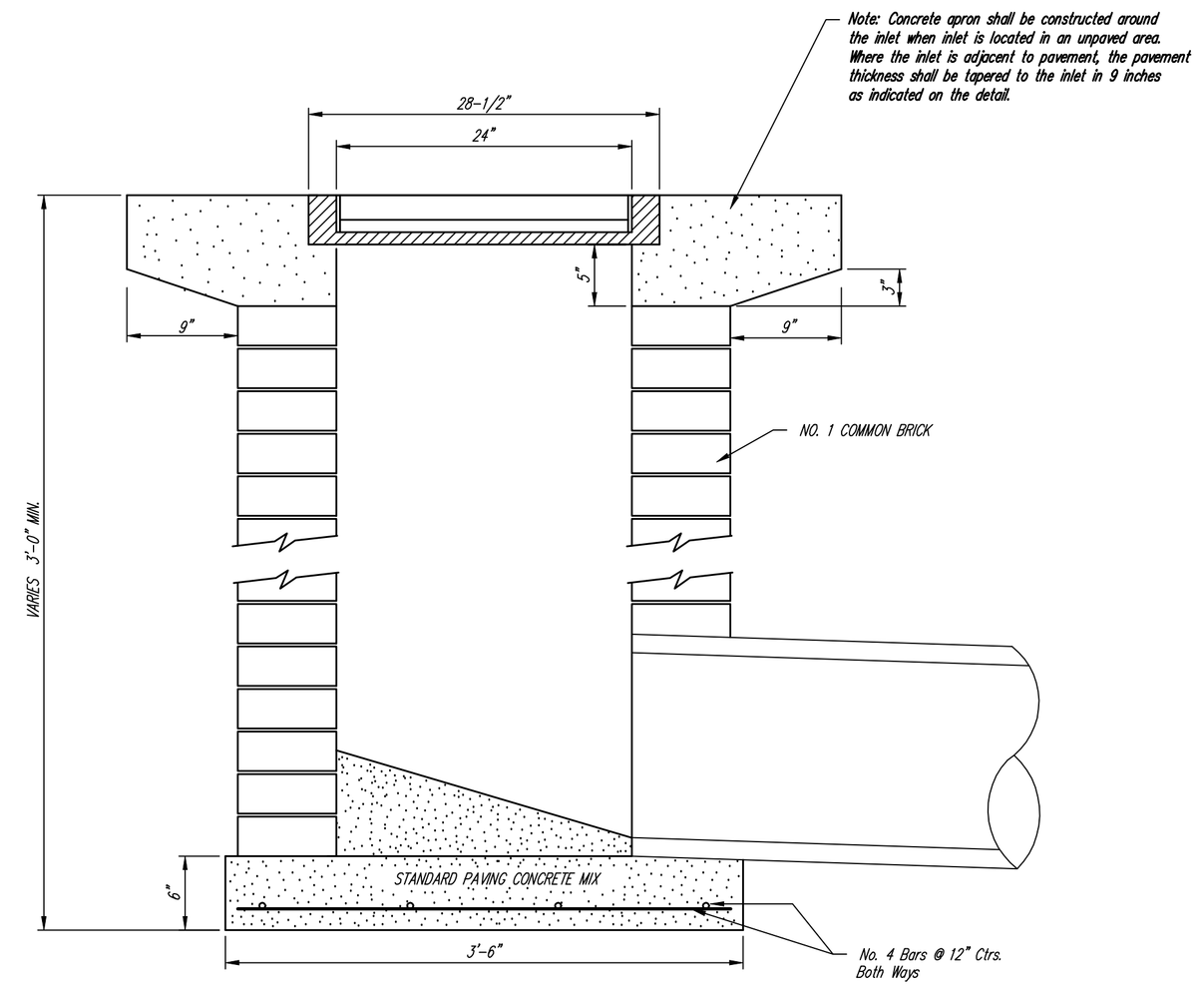

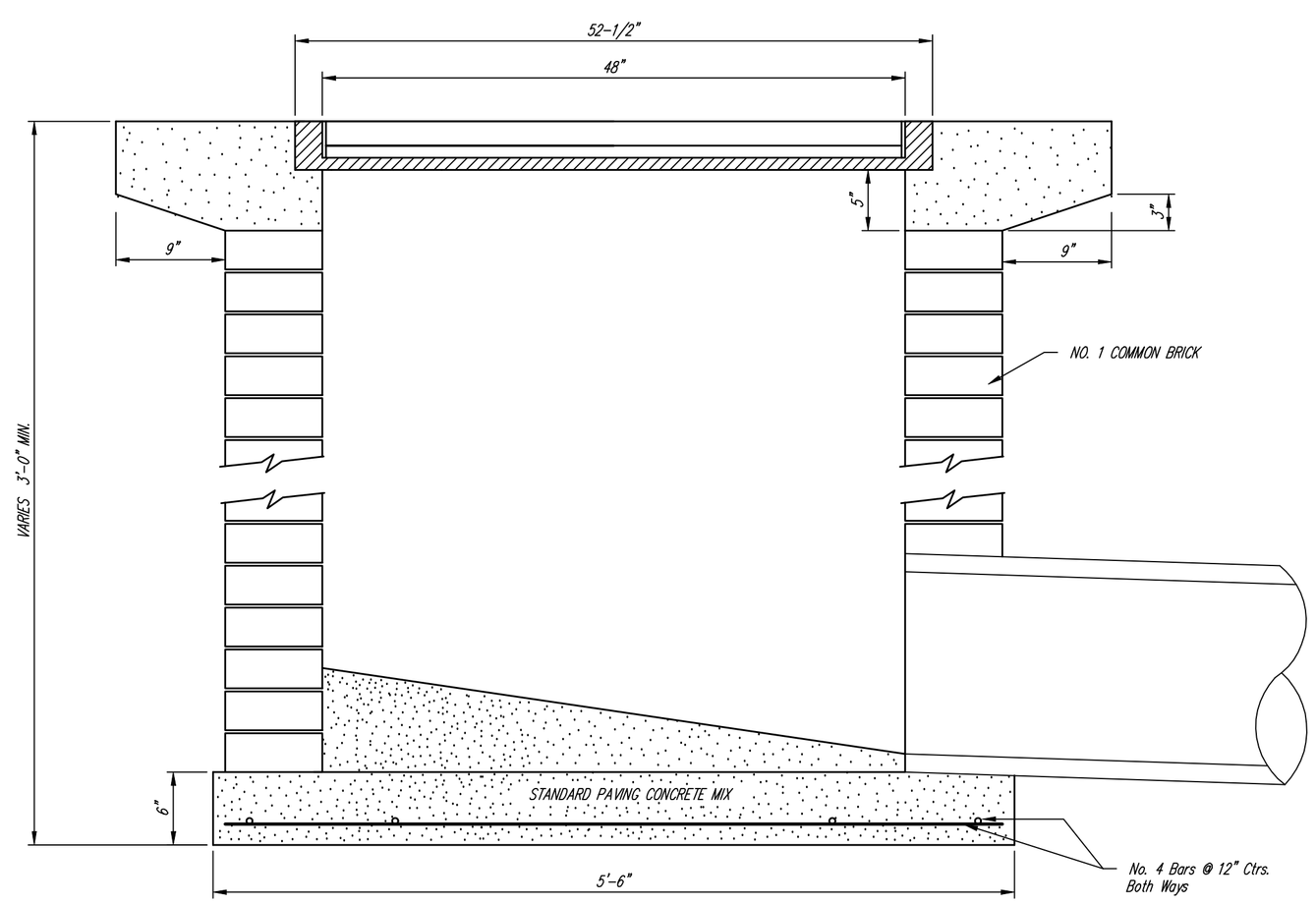

Baughman

Drop Inlet Detail

Baughman Company, P.A. 315 Ellis St. Wichita, KS 67211 P 316-262-7271 F 316-262-0149
ENGINEERING | SURVEYING | PLANNING | LANDSCAPE ARCHITECTURE

PROJECT NUMBER 468-84395	DESIGN STAFF / DRAWN STAFF
REVISIONS:	APPROVED / DATE 09/07
	SCALE NONE
	SHEET 33 OF 51

\DropInt2