SHEET NO.	OF SHEETS
1	5

PLANS FOR CONSTRUCTION OF

PRIVATE STORM WATER

TO SERVE

BLOCK 2, REFLECTION RIDGE 9TH ADDITION

CITY OF WICHITA PRIVATE PROJECT NO. **594PPS (607861)**

INDEX OF SHEETS

1. TITLE SHEET
2. PLAN AND PROFILE
3.-5. DETAILS

PROJECT SURVEY CONTROL

BENCH MARK: RAILROAD SPIKE IN NORTH FACE OF NORTH POLE TO K.G.&E. "H" STRUCTURE AT APPROXIMATELY THE CENTER OF THE SOUTH LINE OF REFLECTION RIDGE 7TH ADDITION. (± 110' NW OF THE NE CORNER OF LOT 17, BLOCK 1, REFLECTION RIDGE 9TH ADDITION)
ELEV.=1147.64

BENCH MARK: PK NAIL IN CENTER OF GOLF CART PATH JUST NORTHEAST OF THE P.I. IN THE WESTERLY LINE OF RESERVE "E" IN REFLECTION RIDGE 9TH ADDITION.
ELEV.=1149.82

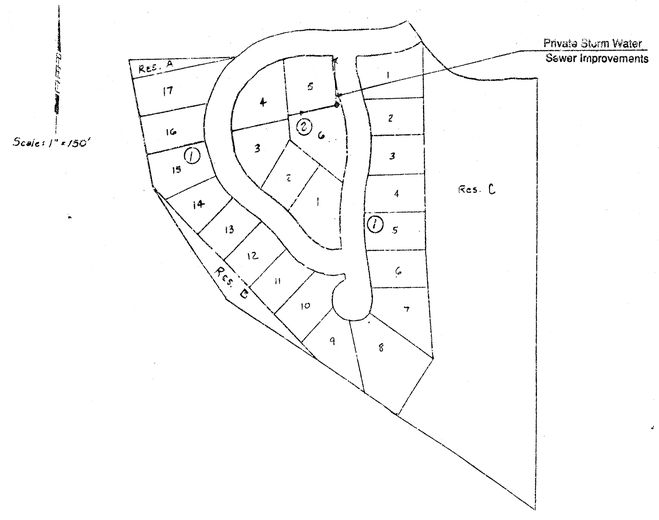

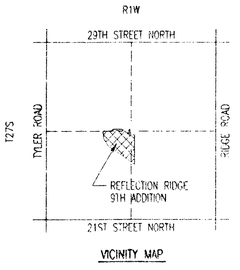

VICINITY MAP

GENERAL NOTES

1. CONSTRUCTION STAKING TO BE PROVIDED BY DEVELOPER.
2. DEVELOPER TO PROVIDE RIGHT-OF-ACCESS.
3. CONTRACTOR IS RESPONSIBLE FOR CONTACTING KANSAS ONE-CALL AND/OR UTILITY COMPANIES TO OBTAIN FIELD LOCATES. CONTRACTOR IS RESPONSIBLE FOR WORKING AROUND EXISTING UTILITIES IN PLACE. IN THE EVENT OF CONFLICT WITH THE PROPOSED IMPROVEMENTS, CONTACT THE DEVELOPER IMMEDIATELY TO MAKE ARRANGEMENTS TO RESOLVE THE CONFLICT.

   UTILITIES AND THEIR APPURTENANCES WHERE FOUND, ARE SHOWN ON THE DRAWING, BUT THE LOCATIONS SHOWN ARE NOT GUARANTEED AND OTHER UNDERGROUND UTILITIES MAY BE ENCOUNTERED.
4. PIPE TO BE ANY ONE OF THE FOLLOWING ALTERNATE PIPE MATERIALS:

   REINFORCED CONCRETE PIPE (RCP)
   HIGH DENSITY POLYETHYLENE PIPE (HDPE)
   POLY VINYL CHLORIDE PIPE (PVC)
   ALUMINIZED STEEL SMOOTH-FLOW PIPE (SFP)

   RCP SHALL BE FURNISHED AND INSTALLED IN ACCORDANCE WITH CITY OF WICHITA SPECIFICATIONS FOR STORM SEWERS AND DRAINAGE.

   HDPE PIPE, JOINTS, AND FITTINGS SHALL BE MANUFACTURED FROM VIRGIN HDPE RESIN, IN ACCORDANCE WITH THE REQUIREMENTS OF AASHTO M294 TYPE S. INSTALLATION SHALL BE PERFORMED IN ACCORDANCE WITH THE REQUIREMENTS OF ASTM D-2321. JOINTS SHALL BE MADE WITH SILT-PROOF GASKETS.

   SFP SHALL BE ALUMINIZED STEEL TYPE 2 SPIRAL RIB PIPE MANUFACTURED IN ACCORDANCE WITH AASHTO M36, EXCEPT THAT THE EXTERNAL HELICAL CORRUGATION PATTERN OF THE PIPE SHALL BE 3/4 IN × 3/4 IN × 7 1/2 IN AS DESCRIBED IN AASHTO M196. ALL PIPE TO BE MANUFACTURED FROM 16 GAUGE MATERIAL AND SHALL CONFORM TO THE TYPE 1R CLASSIFICATION. CONNECTING BANDS AND INSTALLATION METHODS SHALL BE IN ACCORDANCE WITH REQUIREMENTS FOR CORRUGATED METAL PIPE IN CITY OF WICHITA, STANDARD SPECIFICATIONS FOR STORM SEWERS AND DRAINAGE.

   PVC PIPE FOR DIAMETERS 12 INCHES THROUGH 18 INCHES INCLUSIVE SHALL BE FURNISHED AND INSTALLED IN ACCORDANCE WITH CITY OF WICHITA STANDARD SPECIFICATIONS FOR SANITARY SEWERS.

   THE CONTRACTOR SHALL PROVIDE A MATERIAL CERTIFICATION TO THE DEVELOPER FOR APPROVAL PRIOR TO PIPE INSTALLATION STATING THAT ALL MATERIALS USED CONFORM TO THE APPLICABLE SPECIFICATIONS.
5. CONTRACTOR SHALL BE RESPONSIBLE FOR ALL SITE SAFETY CONDITIONS INCLUDING, BUT NOT LIMITED TO, SHEETING AND/OR SHORING FOR TRENCH EXCAVATIONS AND BARRICADE(S)/BARRIER(S) TO PREVENT UNAUTHORIZED ENTRY.
6. CONSTRUCTION IN OR ALONG PUBLIC STREETS SHALL BE MARKED, SIGNED AND/OR BARRICADED IN ACCORDANCE WITH THE MANUAL ON UNIFORM TRAFFIC CONTROL DEVICES AND THE WICHITA BARRICADE MANUAL.
7. ALL CONSTRUCTION TO BE PERFORMED IN REASONABLE CONFORMANCE WITH THE LINES AND GRADES SHOWN ON THE PLANS, EXCEPT WHERE FIELD ADJUSTMENT OF THE HORIZONTAL ALIGNMENT IS REQUIRED TO AVOID CONFLICT WITH UTILITIES. DEVIATIONS FROM PLAN GRADES MUST BE APPROVED BY THE ENGINEER.
8. CONTRACTOR'S WORK SHALL BE GUARANTEED FOR ONE YEAR AGAINST DEFECTS IN MATERIAL AND WORKMANSHIP.
9. DISTURBED RIGHT-OF-WAY TO BE SEEDED BY DEVELOPER.

BOOK
PAGE
DATE
AMD

OCTOBER, 1995

PLANS PREPARED BY
PROFESSIONAL ENGINEERING CONSULTANTS, P.A.
ENGINEERS
WICHITA, KANSAS

MICHAEL W. BERRY
LICENSED
5809
PROFESSIONAL ENGINEER
STATE OF KANSAS
10/17/95

APPROVED AS NOTED
BY CITY ENGINEER OF WICHITA

SANITARY SEWERS _____
STORM SEWERS VRH 10/27/95
DRIVEWAY APPROACHES _____
WATER MAINS _____
PAVING _____

NOTE TO CONTRACTOR

INSPECTION AND TESTING FOR THIS PROJECT IS TO BE PROVIDED BY A LICENSED CONSULTING ENGINEERING FIRM UNDER CONTRACT WITH THE OWNER/DEVELOPER. SAID INSPECTION TO BE IN ACCORDANCE WITH THE CITY OF WICHITA STANDARD CONSTRUCTION ENGINEERING PRACTICES AND CERTIFIED BY A LICENSED PROFESSIONAL ENGINEER. NO WORK SHALL BE PERFORMED IN DEDICATED EASEMENTS OR PUBLIC RIGHT-OF-WAY BY THE CONTRACTOR WITHOUT SUCH INSPECTION NOR SHALL ANY WORK BE COMMENCED IN DEDICATED EASEMENTS OR PUBLIC RIGHT-OF-WAY WITHOUT WRITTEN AUTHORIZATION BY THE CITY ENGINEER.

usr/stm/dgn i 1993/9304/stmtitle.dgn
date 04/18/95 10/18/95
deliver to: dar crook

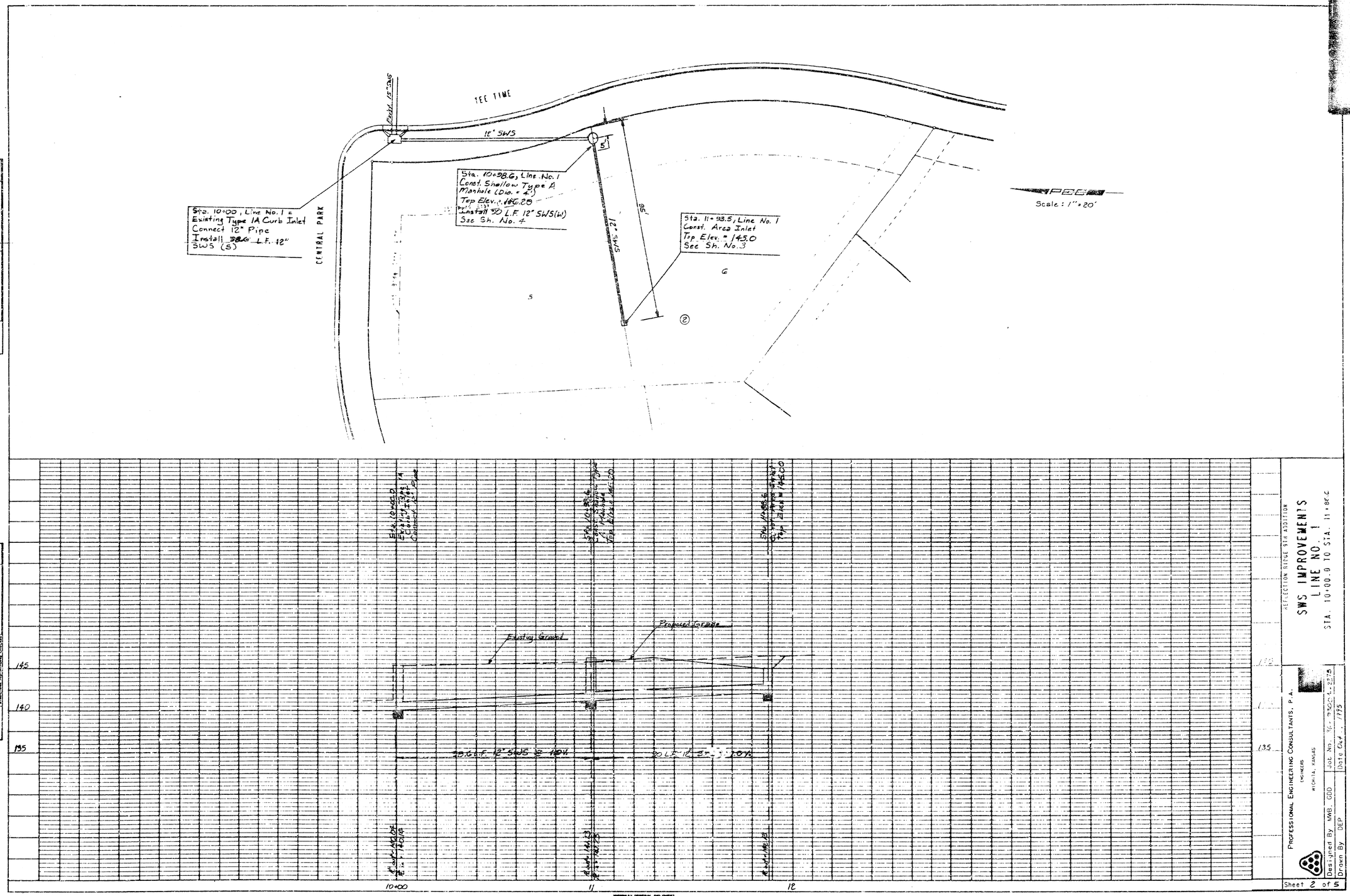

PROFILE
NOTE BOOK No.
SURVEYED
PLOTTED
ALIGNMENT CHECKED
BY OF WAY CHECKED
BY
DATE

PROFILE
NOTE BOOK No.
SURVEYED
PLOTTED
GRADES CHECKED
B. M.'s NOTED
STRUCTURE NOTATIONS CHECKED
BY
DATE

REFLECTION RIDGE 9TH ADDITION

SWS IMPROVEMENTS
LINE NO. 1
STA. 10+00.0 TO STA. 11+88.6

PROFESSIONAL ENGINEERING CONSULTANTS, P.A.
ENGINEERS
WICHITA, KANSAS

Designed By MWB, GDD
Drawn By DEP
Job No. 36-93004-2275
Date Oct. 1995

Sheet 2 of 5

PLATE 1-SINGLE PLAN AND PROFILE-FULL LINE

SHEET NO.	TOTAL SHEETS
3	5

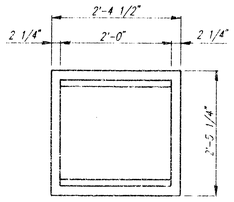

FRAME DETAIL
(Wt.=460 lbs.)

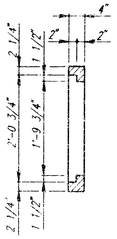

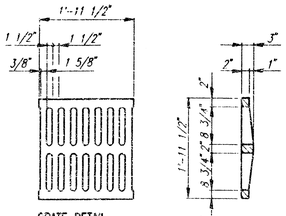

GRATE DETAIL
(Wt.=180 lbs.)

GENERAL NOTES

CONCRETE SHALL BE C.O.W. STANDARD PAVING MIX. ALL EXPOSED EDGES SHALL BE FINISHED WITH AN APPROVED EDGING TOOL.

REINFORCING STEEL SHALL BE A MINIMUM GRADE 40, A.S.T.M. A615. ALL DIMENSIONS RELATIVE TO PLACEMENT OF REINFORCING ARE TO THE CENTERLINE OF BARS UNLESS OTHERWISE NOTED.

INLET CASTINGS SHALL BE MANUFACTURED USING GOOD QUALITY GRAY IRON CONFORMING TO CLASS 30 OF A.S.T.M. DESIGNATION A-48. DIMENSIONS AND WEIGHTS SHOWN ON THE DETAILED DRAWINGS SHALL BE CONSIDERED AS MINIMUM REQUIREMENTS AND ANY DEVIATIONS FROM THE DIMENSIONS SHOWN MUST BE SPECIFICALLY APPROVED. THE FINISHED CASTINGS SHALL BE OF UNIFORM QUALITY, FREE FROM BLOWHOLES, POROSITY, HARD SPOTS, SHRINKAGE DISTORTIONS OR OTHER DEFECTS.

CONSTRUCTION REQUIREMENTS AND MATERIALS FOR MASONRY WALLS SHALL CONFORM TO THE REQUIREMENTS OF THE STANDARD SPECIFICATIONS.

INLET FLOOR SHALL BE SHAPED WITH UNREINFORCED CONCRETE (8 SACK SAND MIX) TO CREATE FLOW CHANNELS AND TO INCREASE HYDRAULIC EFFICIENCY SUCH THAT THE INLET WILL BE SELF CLEANING BETWEEN ALL INLET AND/OR OUTLET PIPES.

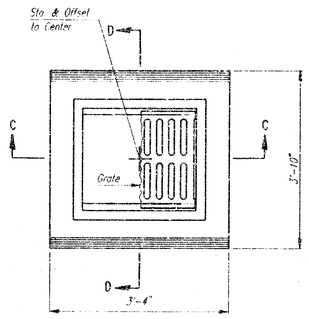

PLAN

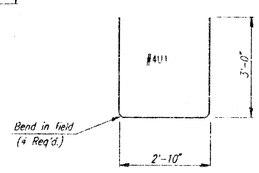

BENDING DIAGRAM

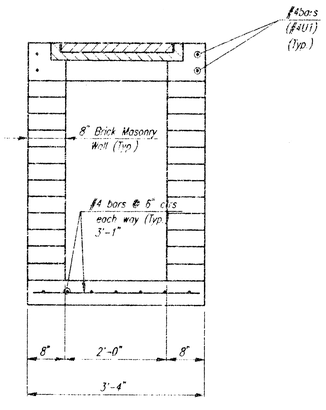

SECTION C-C

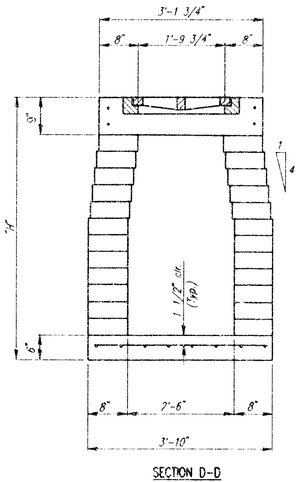

SECTION D-D

AREA INLET

PRIVATE STORM WATER

STD. AREA INLET DETAILS

PROFESSIONAL ENGINEERING CONSULTANTS, P.A.
ENGINEERS
WICHITA, KANSAS

Designed by	MWB, DRC	Checked by	
Drawn by	DEP	Date OCT., 1995	Job No. 93004

usr/usfi/dgn: i: 1993/93004/inletd2.dgn
date plotted: 10/18/95
deliver to: dar crank

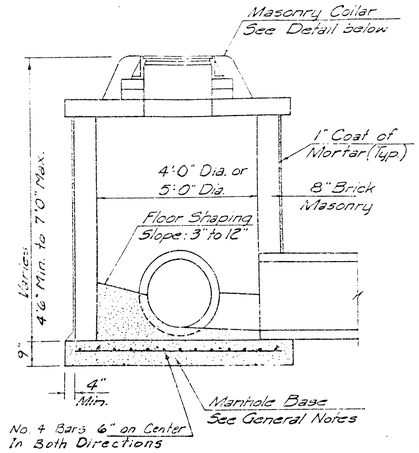

SHALLOW TYPE "A" MANHOLE

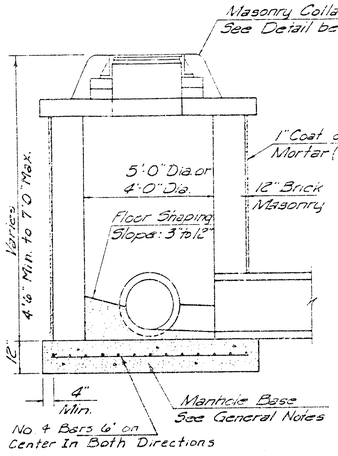

SHALLOW TYPE "B" MANHOLE

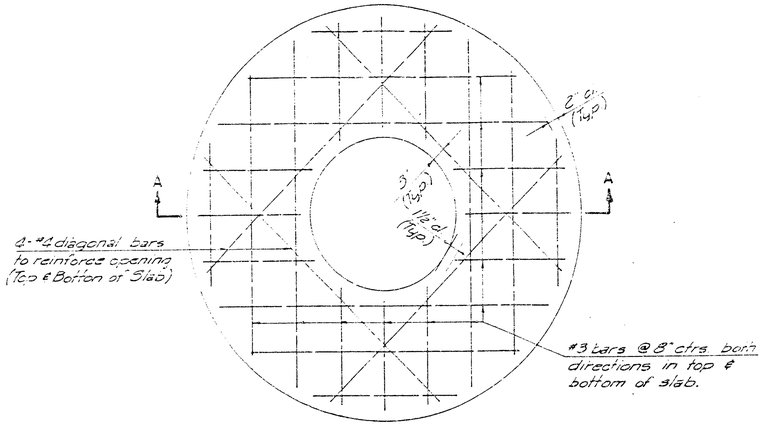

PLAN

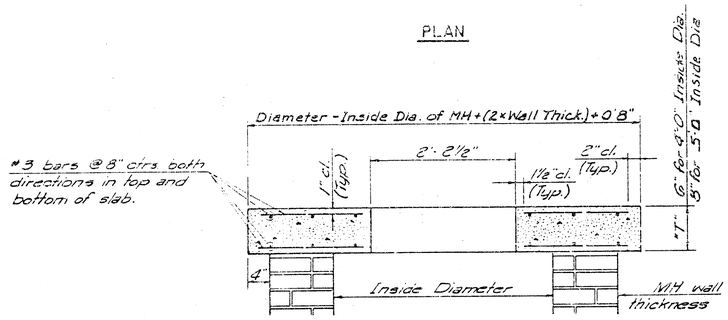

SECTION A-A

FLAT CONCRETE SLAB DETAILS

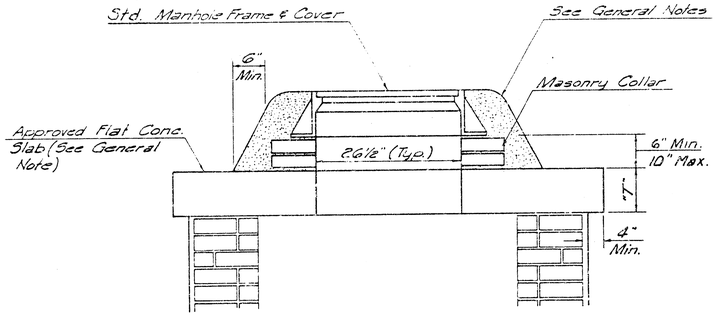

MASONRY COLLAR DETAIL

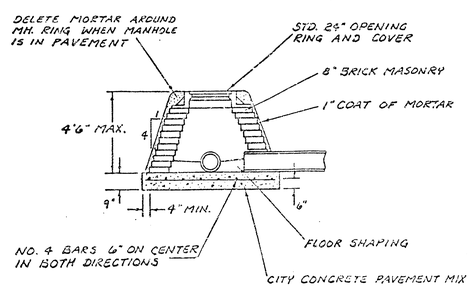

SPECIAL SHALLOW TYPE 'A' MANHOLE

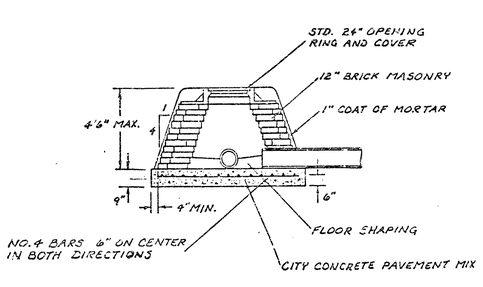

SPECIAL SHALLOW TYPE 'B' MANHOLE

GENERAL NOTES

1. MORTAR USED IN MASONRY CONSTRUCTION SHALL CONTAIN 8 SACKS OF CEMENT PER CUBIC YARD. CONCRETE USED IN MANHOLE BASES SHALL CONFORM TO THE REQUIREMENTS OF CONCRETE FOR CONCRETE PAVEMENT CONSTRUCTION AS SPECIFIED IN THE CITY STANDARD PAVING SPECIFICATIONS USING CITY CONCRETE CEMENT MIX WITHOUT AIR ENTRAINING ADMIXTURE. MORTAR SHALL BE PLACED AROUND THE MANHOLE RING AS SHOWN ON THE DRAWINGS WHEN MANHOLES ARE CONSTRUCTED IN UNPAVED AREAS. TYPE "A" SHALLOW MANHOLES CAN BE USED ON SEWERS WHEN THE MANHOLE IS NOT LOCATED WITHIN PUBLIC STREET PAVEMENT. MANHOLES CONSTRUCTED WHERE PIPE SIZES ARE SMALLER THAN 24" SHALL HAVE AN INSIDE DIAMETER OF 4'. MANHOLES CONSTRUCTED WHERE PIPE SIZES ARE 24" OR LARGER SHALL HAVE AN INSIDE DIAMETER OF 5'. COMPLETED MANHOLE SHALL BE WITHOUT LEAKS AND WATER TIGHT.

2. REINFORCING STEEL SHALL BE INSTALLED IN THE MANHOLE BASES AND SHALL CONSIST OF NO. 4 BARS PLACED ON 6" CENTERS IN BOTH DIRECTIONS. THE MANHOLE BASE REINFORCEMENT SHALL BE PLACED 6" ABOVE THE BOTTOM OF THE MANHOLE BASE. ALL COSTS FOR FURNISHING AND INSTALLING REINFORCING STEEL SHALL BE INCLUDED IN THE UNIT PRICE BID FOR THE MANHOLE.

3. THE FLOORS OF ALL MANHOLES SHALL BE SHAPED WITH FLOW CHANNELS SUCH THAT THE MANHOLES WILL BE SELF CLEANING AND FREE OF AREAS WHERE SOLIDS COULD BE DEPOSITED AS SEWAGE FLOWS THROUGH THE MANHOLE FROM ALL INLET PIPES TO THE OUTLET PIPE. FLOW CHANNELS SHALL BE FORMED TO MATCH THE BOTTOM HALVES OF THE INFLOWING PIPES AND THE OUTFLOWING PIPE AS SHOWN BY THE DRAWINGS. MANHOLE FLOORS SHALL HAVE SLOPES OF 3 INCHES PER FOOT IN THE AREAS OUTSIDE OF THE FLOW CHANNELS SLOPED TOWARD THE FLOW CHANNELS. PIPES LAID THROUGH MANHOLES SHALL HAVE THE TOP HALF REMOVED TO NEAT LINES FOR THE FULL INSIDE DIAMETER OF THE MANHOLE. MANHOLE FLOORS SHALL THEN BE SHAPED AROUND THE BOTTOM HALF OF THE PIPE WHICH FORMS THE FLOW CHANNEL.

4. PIPES INSTALLED WITHIN THE EXCAVATION MADE FOR THE MANHOLE SHALL BE CRADLED WITH CONCRETE TO THE LIMITS OF THE MANHOLE EXCAVATION. WHEN CLAY PIPE IS USED, THE CRADLE SHALL EXTEND TO THE FIRST JOINT OUTSIDE THE MANHOLE. THE CRADLE SHALL BE TERMINATED AT THE CLAY PIPE JOINT IN A MANNER WHICH WILL MAINTAIN THE FLEXIBILITY OF THE JOINT. COST OF CRADLE WITHIN MANHOLE EXCAVATION OR TO CLAY PIPE JOINTS ADJACENT TO MANHOLE SHALL BE INCLUDED IN THE UNIT PRICE BID FOR THE MANHOLE.

5. MANHOLE COVER CASTINGS AND MANHOLE FRAME CASTINGS SHALL CONFORM TO THE REQUIREMENTS AS INDICATED IN THE STANDARD SPECIFICATIONS AND AS SHOWN IN THE STANDARD DETAIL DRAWINGS.

6. THE CROWNS OF INFLOWING PIPES SHALL NEVER BE SET LOWER THAN THE CROWN OF THE OUTFLOWING PIPE.

7. ~~STANDARD SHALLOW MANHOLES TYPE "A" AND "B" SHALL BE PAID FOR AT THE UNIT PRICE BID PER EACH FOR THE TYPE AND DIAMETER INDICATED. STANDARD SPECIAL SHALLOW MANHOLES TYPE "A" AND "B" SHALL BE PAID FOR AT THE UNIT PRICE BID PER EACH FOR THE TYPE INDICATED. ALL STANDARD SHALLOW MANHOLE DIAMETERS WILL BE 4' UNLESS INDICATED OTHERWISE.~~

CITY OF WICHITA, KANSAS
STANDARD SHALLOW MANHOLES TYPE 'A' AND TYPE 'B'

Designed by		Checked by	
Drawn by		Date Oct. 1995	Job No. 36-93004