STORM WATER SEWER EXTENSIONS

PAWNEE MESA ADDITION - PHASE 3

PRIVATE PROJECT NUMBER: 606 PPS (607861)

GENERAL NOTES

Underground utility service lines and overhead utility pole lines are to be adjusted as necessary by others prior to construction unless the plans specifically call for their adjustment by the Contractor or unless the plans specifically identify a utility to be adjusted by its owner during construction. Existing utilities and their location, as shown on the plans, represent the best information obtainable for design. Location information has been obtained from the various utility companies and is either from company record drawings or company-provided field locations. The Contractor will be required to work around existing utilities within the right-of-way which do not conflict with proposed construction.

The Contractor shall be responsible for preserving property irons. The Contractor will be required to re-establish any property irons which are damaged or destroyed by his construction operations. Such irons shall be re-established by a licensed land surveyor in accordance with state laws.

Pavement removal and/or replacement will be measured and paid for on the lineal foot basis as measured along the centerline of the water line regardless of width, pavement type and/or pavement thickness. Minimum limits of such pavement removal and replacement shall be one foot beyond the limits of the excavation made for the water line or the structure, except when such saw cuts are within three (3) feet of an existing joint the limits of removal shall be extended to the existing joint. Removal and replacement of existing pavement shall conform to the applicable sections of the City of Wichita Standard Specifications.

All disturbed areas shall be seeded, mulched, and fertilized per City specifications.

Utility easements along the route of the sewer shall be graded to the elevation shown on the plan/profile sheets.

The Contractor shall contact Kansas One Call prior to construction to verify the location of all underground utility lines. Any arrangements for the relocation of underground utility lines shall be the responsibility of the Contractor.

The Contractor shall Install 4" P.V.C. Stubs In each Inlet to allow for future Sub-grade drainage

APPROVED AS NOTED
BY CITY ENGINEER OF WICHITA

Sanitary Sewers _____

Storm Sewers VRH 1/23/96

Driveway Approaches _____

Water Mains _____

Paving _____

NOTE TO CONTRACTORS

Inspection and testing for this project are to be provided by a Licensed Consulting Engineering Firm under contract with the Owner/Developer. Said Inspection to be in accordance with the City of Wichita standard construction engineering practices and certified by a Licensed Professional Engineer. No work shall be performed in dedicated easements or public right-of-way by the Contractor without such inspection, nor shall any work be commenced without written authorization by the City Engineer.

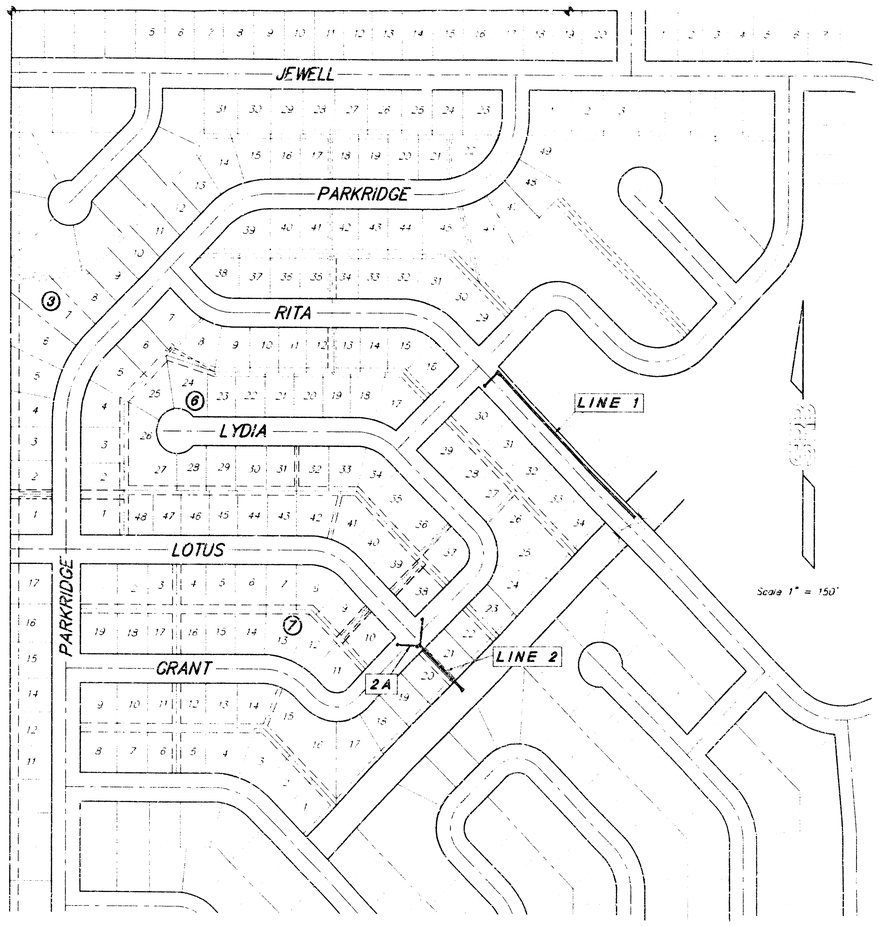

INDEX OF SHEETS

1 TITLE SHEET
2 LINE 1
3 LINE 2 AND LINE 2A
4 STANDARD 1A INLET DETAIL (L = 5')
5 STANDARD 1A INLET DETAIL (L = 10')

BENCH MARKS

BENCH MARK: SQUARE CUT IN TOP OF HUBGUARD, SOUTHWEST CORNER OF RCBC UNDER JEWELL, BETWEEN PRESCOTT AND FIELDCREST, ELEVATION = 140.23 CITY DATUM

BENCH MARK: SQUARE CUT IN TOP OF HUBWALL, NORTH SIDE OF RITA, LOCATED 500' SOUTHEAST (ALONG RITA) OF THE INTERSECTION OF RITA AND LOTUS. ELEVATION = 144.22 CITY DATUM.

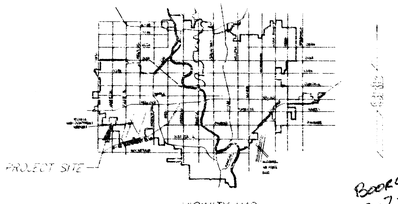

VICINITY MAP

BOORED
2-7-97
MCG
D-326

CHRISTOPHER MICHAEL BOHM
LICENSED
11631
KANSAS
PROFESSIONAL ENGINEER
1-18-96

AS BUILT
7/25/96

CITY OF WICHITA, KANSAS
MICHAEL E. LINDEBAK - CITY ENGINEER

SRB
924 NORTH MAIN
WICHITA KANSAS 67203
316-264-8008
FAX 264-4627
SAVOY, RUGGLES & BOHM, P.A.
ENGINEERING & SURVEYING

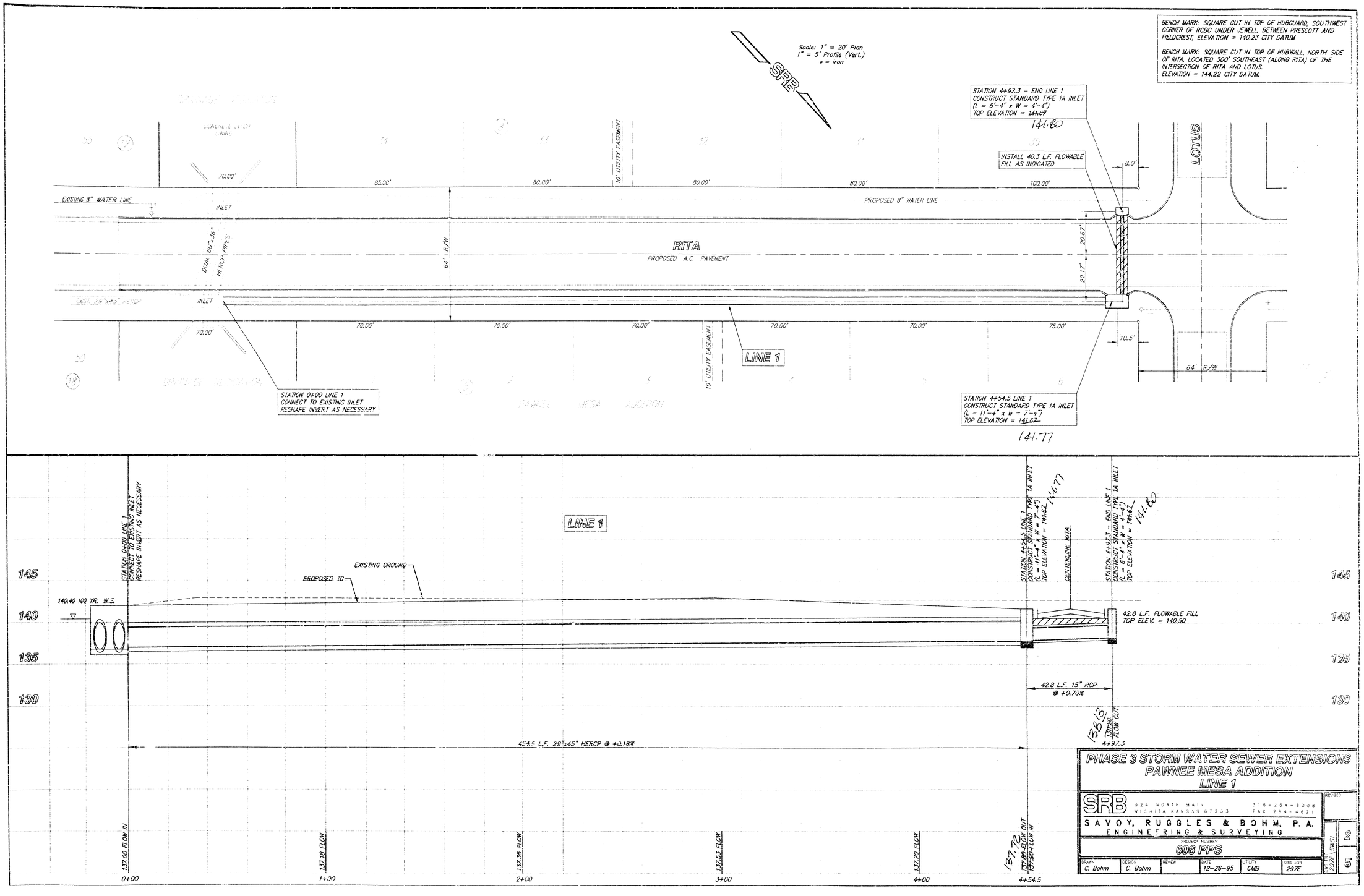

PHASE 3 STORM WATER SEWER EXTENSIONS
PAWNEE MESA ADDITION
LINE 1

SRB
924 NORTH MAIN
WICHITA, KANSAS 67203
316-264-8008
FAX 264-4621

SAVOY, RUGGLES & BOHM, P.A.
ENGINEERING & SURVEYING

PROJECT NUMBER
606 PPS

DRAWN	DESIGN	REVIEW	DATE	UTILITY	SRB JOB
C. Bohm	C. Bohm		12-26-95	CMB	297E

REVISED

SHEET 2 OF 5

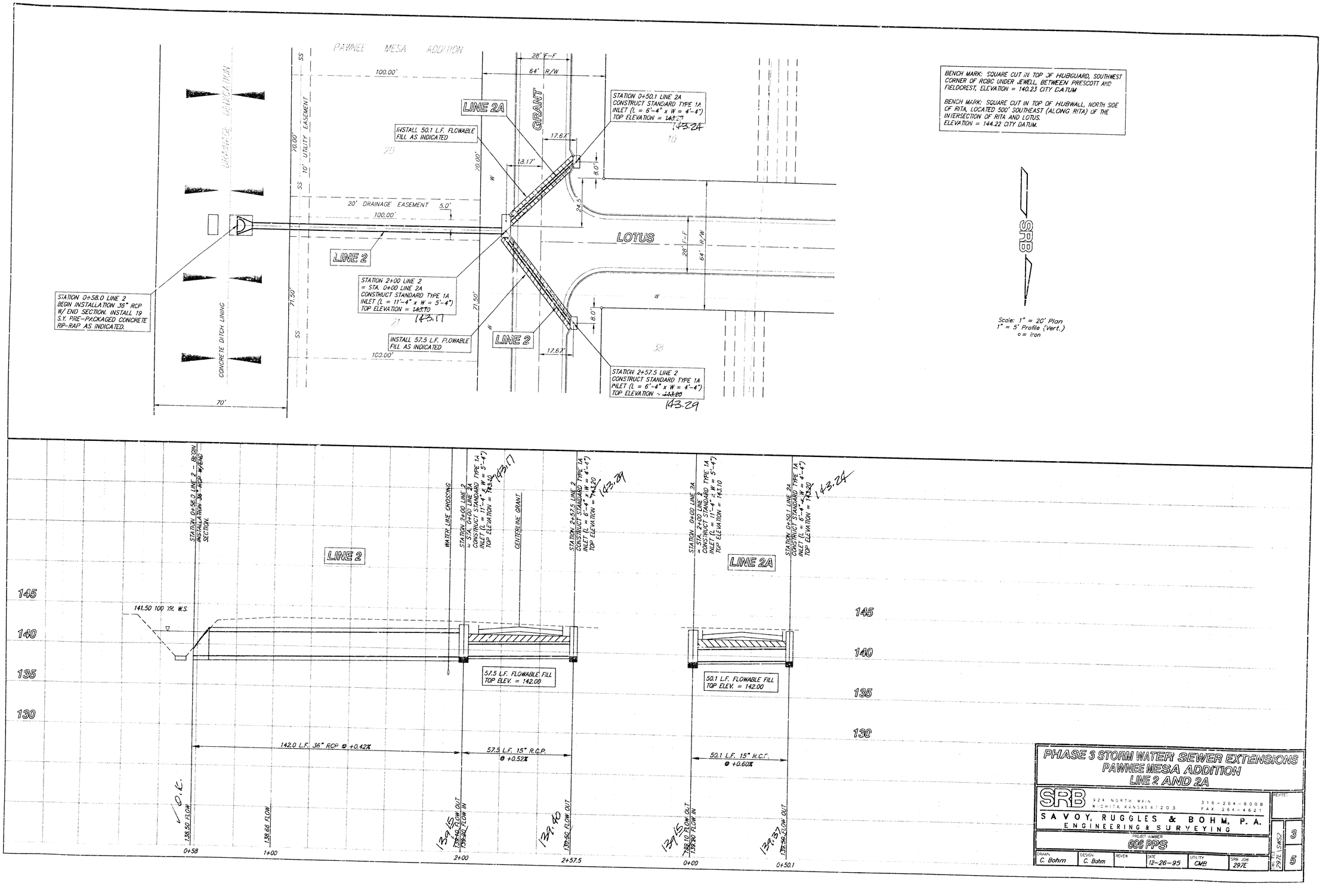

PHASE 3 STORM WATER SEWER EXTENSIONS
PAWNEE MESA ADDITION
LINE 2 AND 2A

SRB
924 NORTH MAIN
WICHITA, KANSAS 67203
316-264-8008
FAX 264-4621

SAVOY, RUGGLES & BOHM, P.A.
ENGINEERING & SURVEYING

PROJECT NUMBER
606 PPS

DRAWN	DESIGN	REVIEW	DATE	UTILITY	SRB JOB	REVISED
C. Bohm	C. Bohm		12-26-95	CMB	297E	3

297E \SWS2 5

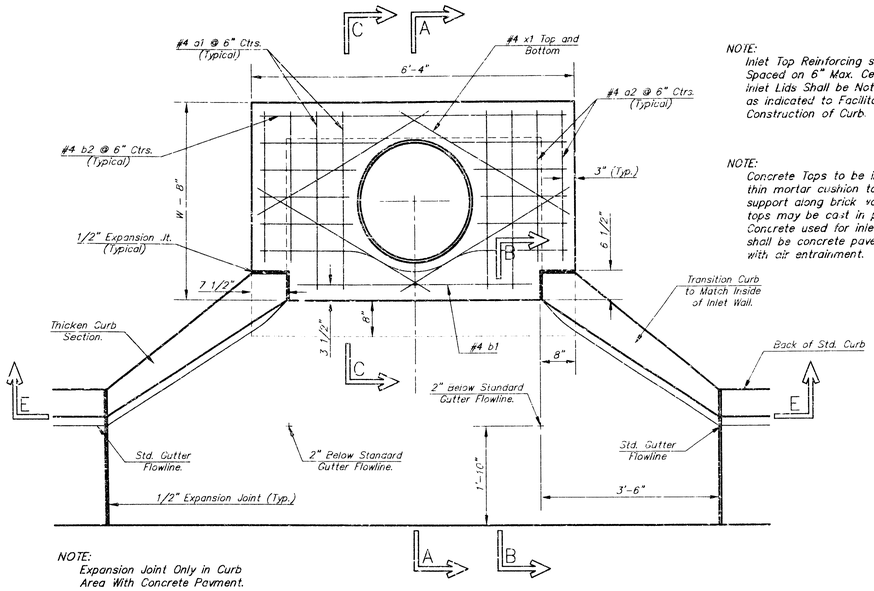

NOTE:
Expansion Joint Only in Curb Area With Concrete Pavement.

PLAN

NOTE:
Inlet Top Reinforcing shall be Spaced on 6" Max. Centers. Inlet Lids Shall be Notched Out as indicated to Facilitate Construction of Curb.

NOTE:
Concrete Tops to be installed on thin mortar cushion to insure full support along brick walls. Concrete tops may be cast in place or precast. Concrete used for inlet construction shall be concrete pavement mix with air entrainment.

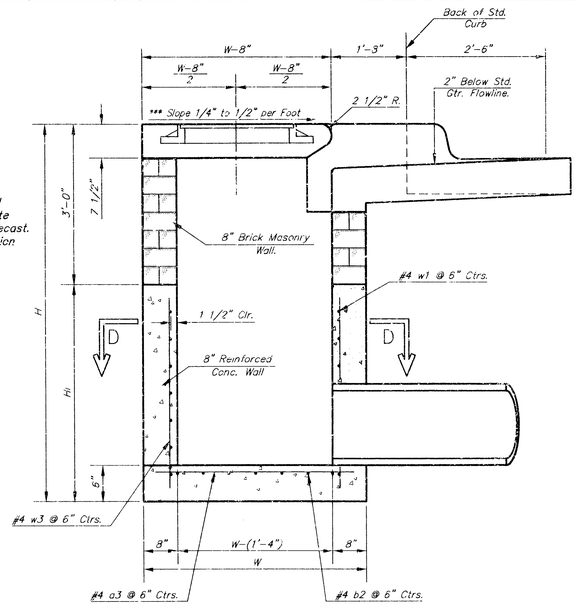

SECTION A-A

***NOTE: Slope of inlet tops to Match Sidewalk or Parking Slopes within Limits Indicated.

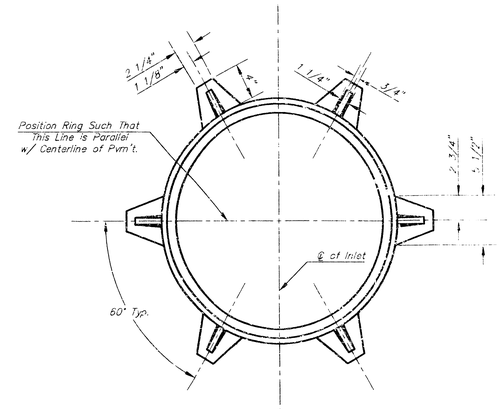

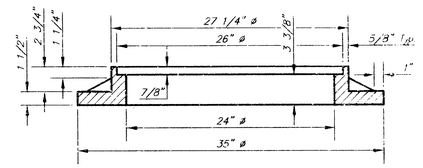

MANHOLE RING AND COVER

Weight = 190 Lbs.

*See City of Wichita Standard Manhole Ring and Cover Detail Sheet for Cover Details to Be Used With Inlet Frame.

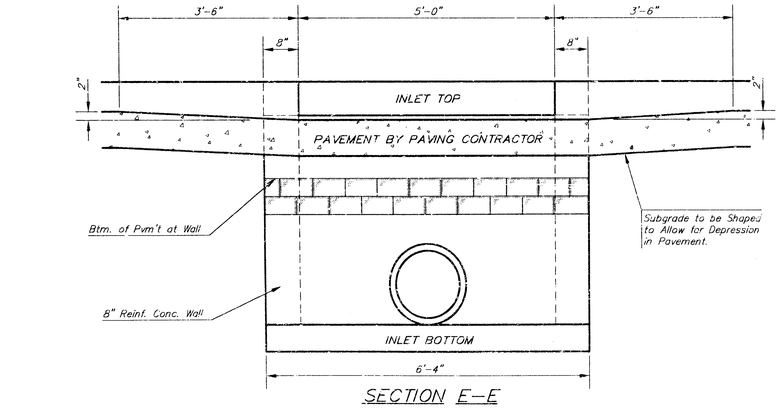

SECTION E-E

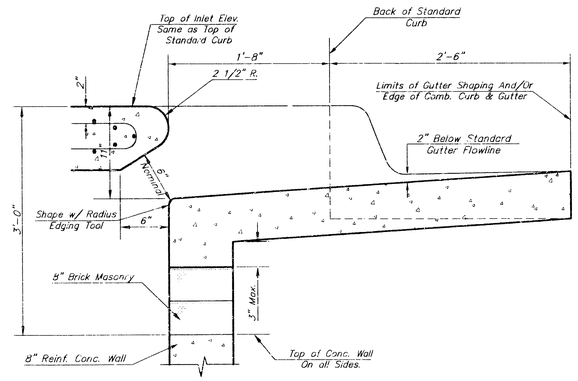

SECTION B-B

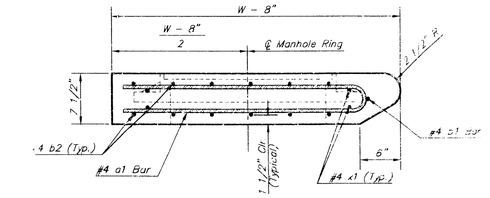

SECTION A-A

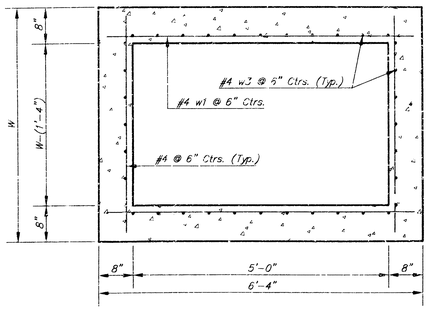

SECTION D-D

NOTE: Contractor shall have the option of constructing 8" brick masonry walls between the concrete inlet base and top on this inlet when W=6'-4" and H=7'-0" or less.

Additional curb and gutter construction necessary to connect set-back inlet to pavement will be paid for at the unit price bid for each inlet hookup.

Inlet invert shall be shaped with 8 sack sand mix concrete to create flow channels and to increase hydraulic efficiency such that the inlet will be self-cleaning between all inlet and/or outlet pipes.

The ends of all pipes installed in inlets shall be cut off flush with the inside face of the inlet wall

PRECAST SLAB AND FLOOR REINFORCING

		W = 4'-4"		W = 5'-4"		W = 6'-4"		W = 7'-4"		W = 8'-4"	
MARK	SIZE	NO.	LENGTH	NO.	LENGTH	NO.	LENGTH	NO.	LENGTH	NO.	LENGTH
* a1	#4	6	6'-7"	6	8'-7"	6	10'-7"	6	12'-7"	6	14'-7"
a2	#4	4	6'-0"	4	8'-0"	4	10'-0"	4	12'-0"	4	14'-0"
a3	#4	13	4'-1"	13	5'-1"	13	6'-1"	13	7'-1	13	8'-1"
b1	#4	1	4'-9"	1	4'-9"	1	4'-9"	1	4'-9"	1	4'-9"
* b2	#4	23	6'-1"	29	6'-1"	35	6'-1"	41	6'-1"	47	6'-1"
w1	#4	8	3'-10"	8	4'-2"	8	4'-6"	8	4'-10"	8	5'-2"

WALL REINFORCING

		W = 4'-4"		W = 5'-4"		W = 6'-4"		W = 7'-4"		W = 8'-4"	
MARK	SIZE	NO.	LENGTH	NO.	LENGTH	NO.	LENGTH	NO.	LENGTH	NO.	LENGTH
w1	#4	①	6'-1"	①	6'-1"	①	6'-1"	①	6'-1"	①	6'-1"
w2	#4	①	4'-1"	①	5'-1"	①	6'-1"	①	7'-1"	①	8'-1"
w3	#4	32	②	36	②	40	②	44	②	48	②

* Field Bend or Cut Reinforcing as Required for Clearance.

① 4 (HI - 12") (HI - 21") Rounded down to nearest 0.5'

② HI - 3"

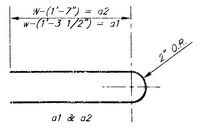

BENDING DIAGRAM

STANDARD CURB INLET PRECAST TOPS

W	PRE-CAST TOP SIZE	PIPE SIZE	CU. YD. CONC.
4'-4"	3'-8" x 6'-4" x 7 1/2"	21" & SMALLER	0.38±
5'-4"	4'-8" x 6'-4" x 7 1/2"	24" & 30"	0.51±
6'-4"	5'-8" x 6'-4" x 7 1/2"	36" & 42"	0.64±
7'-4"	6'-8" x 6'-4" x 7 1/2"	48" & 54"	0.77±
8'-4"	7'-8" x 6'-4" x 7 1/2"	60" & 66"	0.92±

Revised - Feb. 16, 1968

TYPE 1A INLET (LENGTH = 5.0')
CITY OF WICHITA, KANSAS

REV. 2-16-68 | 1A-5 | 4 | 5

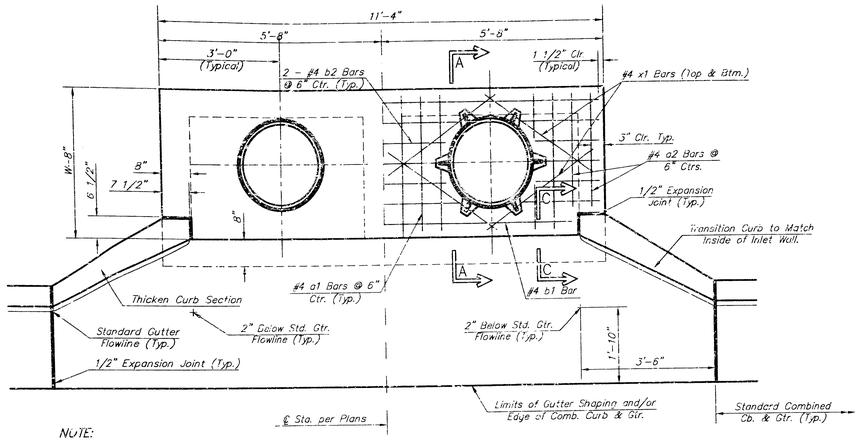

NOTE:
Expansion Joint Only in Curb Area with Concrete Pavement.

PLAN

*Left Side Shown Without Slab Reinforcing.
Right Side Shown With Slab Reinforcing

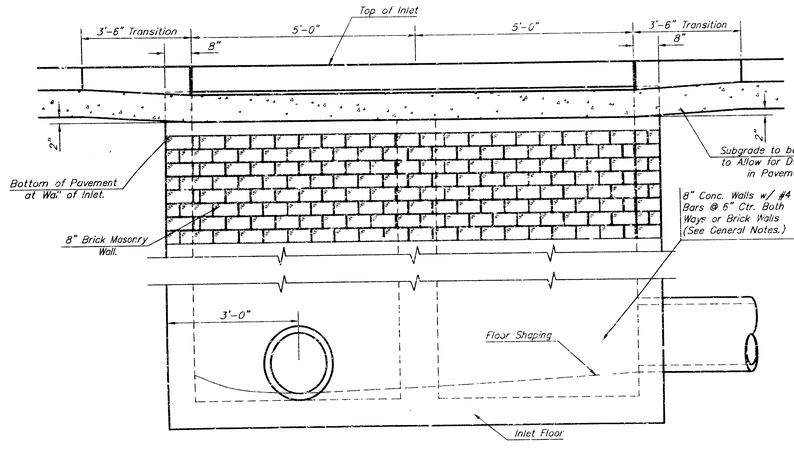

ELEVATION

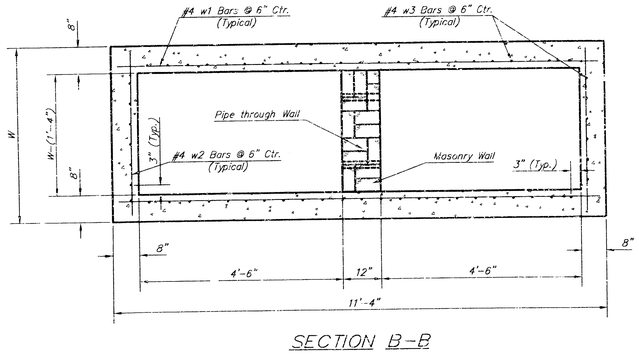

SECTION B-B

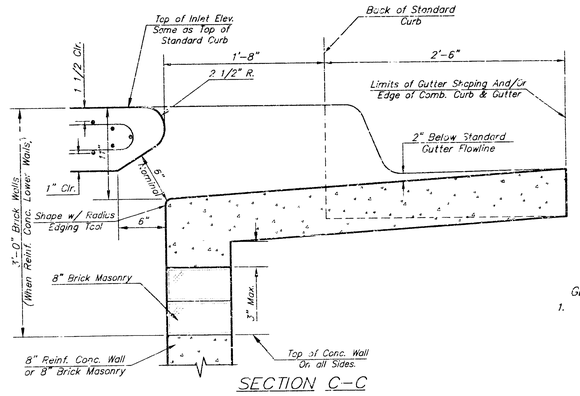

SECTION C-C

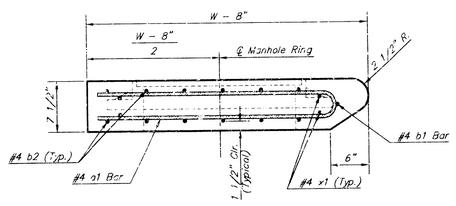

SECTION A-A

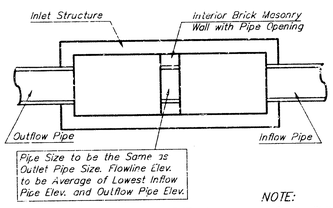

CASE I

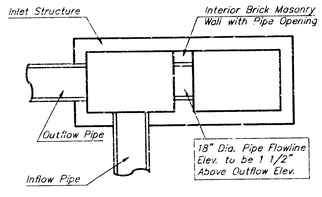

CASE II

NOTE:
Center Wall Pipe Size shall be as Specified in Inlet Construction Notes on the Plan/Profile Sheets for those Cases not Shown Here.

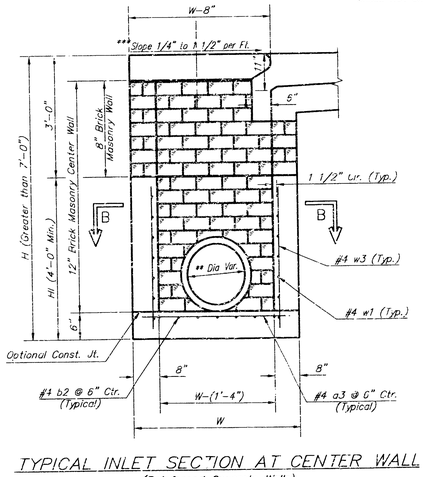

TYPICAL INLET SECTION AT CENTER WALL
(Reinforced Concrete Walls)

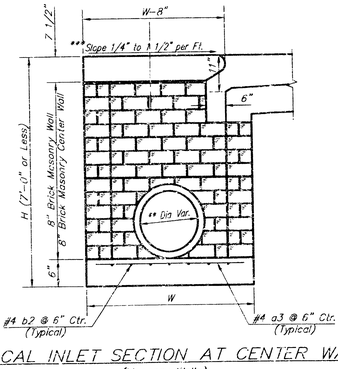

TYPICAL INLET SECTION AT CENTER WALL
(Masonry Walls)

NOTES:
** A center wall opening shall be provided by means of a section of reinforced concrete pipe. See Case I and Case II above.
*** Slope of inlet tops to match sidewalk or parking slopes within limits indicated

PRECAST SLAB AND FLOOR REINFORCING										
		W = 4'-4"		W = 5'-4"		W = 6'-4"		W = 7'-4"		W = 8'-4"
MARK	SIZE	NO.	LENGTH	NO.	LENGTH	NO.	LENGTH	NO.	LENGTH	NO.	LENGTH
* a1	#4	13	6'-1"	13	8'-7"	13	10'-7"	13	12'-7"	13	14'-7"
a2	#4	4	6'-0"	4	8'-0"	4	10'-0"	4	12'-0"	4	14'-0"
a3	#4	23	4'-1"	23	5'-1"	23	6'-1"	23	7'-1	23	8'-1"
b1	#4	1	9'-9"	1	9'-9"	1	9'-9"	1	9'-9"	1	9'-9"
* b2	#4	23	11'-1"	29	11'-1"	35	11'-1"	41	11'-1"	47	11'-1"
x1	#4	16	3'-10"	16	4'-2"	16	4'-6"	16	4'-10"	16	5'-2"

WALL REINFORCING										
		W = 4'-4"		W = 5'-4"		W = 6'-4"		W = 7'-4"		W = 8'-4"
MARK	SIZE	NO.	LENGTH	NO.	LENGTH	NO.	LENGTH	NO.	LENGTH	NO.	LENGTH
w1	#4	①	11'-1"	①	11'-1"	①	11'-1"	①	11'-1"	①	11'-1"
w2	#4	①	4'-1"	①	5'-1"	①	6'-1"	①	7'-1"	①	8'-1"
w3	#4	52	②	56	②	60	②	64	②	68	②

* Field Bend or Cut Reinforcing as Required for Clearance.
① 4 (Hi - 12") (Hi - 21") Rounded down to nearest 0.5'
② Hi - 3"

GENERAL NOTES:

1. The contractor shall be required to construct 8" brick masonry walls between the concrete inlet base and top as this inlet when W=6'-4" or less and H=7'-0" or less. When W is greater than 6'-4" and H is less than 7'-0" the outside inlet walls below the brick stock shall be reinforced concrete construction and the center wall shall be of masonry construction as shown for the masonry wall option.
2. Inlet invert shall be shaped with a suck sand mix concrete to create flow channels and to increase hydraulic efficiency such that the inlet will be self cleaning between all inlet and/or outlet pipes.
3. Concrete tops to be installed on thin mortar cushion to insure full support along brick walls. Concrete tops may be cast in place or precast. Concrete used for inlet construction shall be concrete pavement mix.
4. Inlet top reinforcing shall be spaced on 6" max. centers. Inlet lids shall be notched out as indicated to facilitate construction of curb. Bars in inlet top to be field bent or cut to clear manhole ring.
5. The ends of all pipes installed in inlets shall be cut off flush with the inside face of the inlet wall.

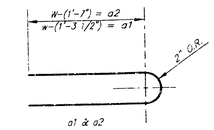

BENDING DIAGRAM

STANDARD CURB INLET PRECAST TOPS			
W	PRE-CAST TOP SIZE	PIPE SIZE	CU. YD. CONC.
4'-4"	7'-8" 11'-4" 7 1/2"	21" & SMALLER	0.8 c.y.
5'-4"	4'-8" 11'-4" 7 1/2"	24" & 30"	1.0 c.y.
6'-4"	5'-8" 11'-4" 7 1/2"	36" & 42"	1.3 c.y.
7'-4"	6'-8" 11'-4" 7 1/2"	48" & 54"	1.6 c.y.
8'-4"	7'-8" 11'-4" 7 1/2"	60" & 66"	1.8 c.y.

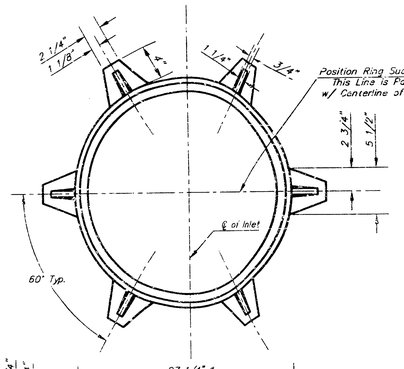

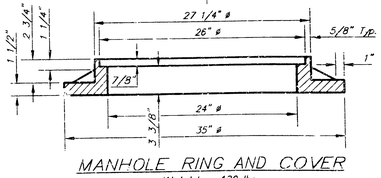

MANHOLE RING AND COVER
Weight = 180 lbs.

*See City of Wichita Standard Manhole Ring and Cover Detail Sheet for Cover Details to Be Used With Inlet Frame.

Revised - Feb. 16, 1989

TYPE 1A INLET (LENGTH = 10.0')
CITY OF WICHITA, KANSAS

Sheet No. 5 of 5 Sheets