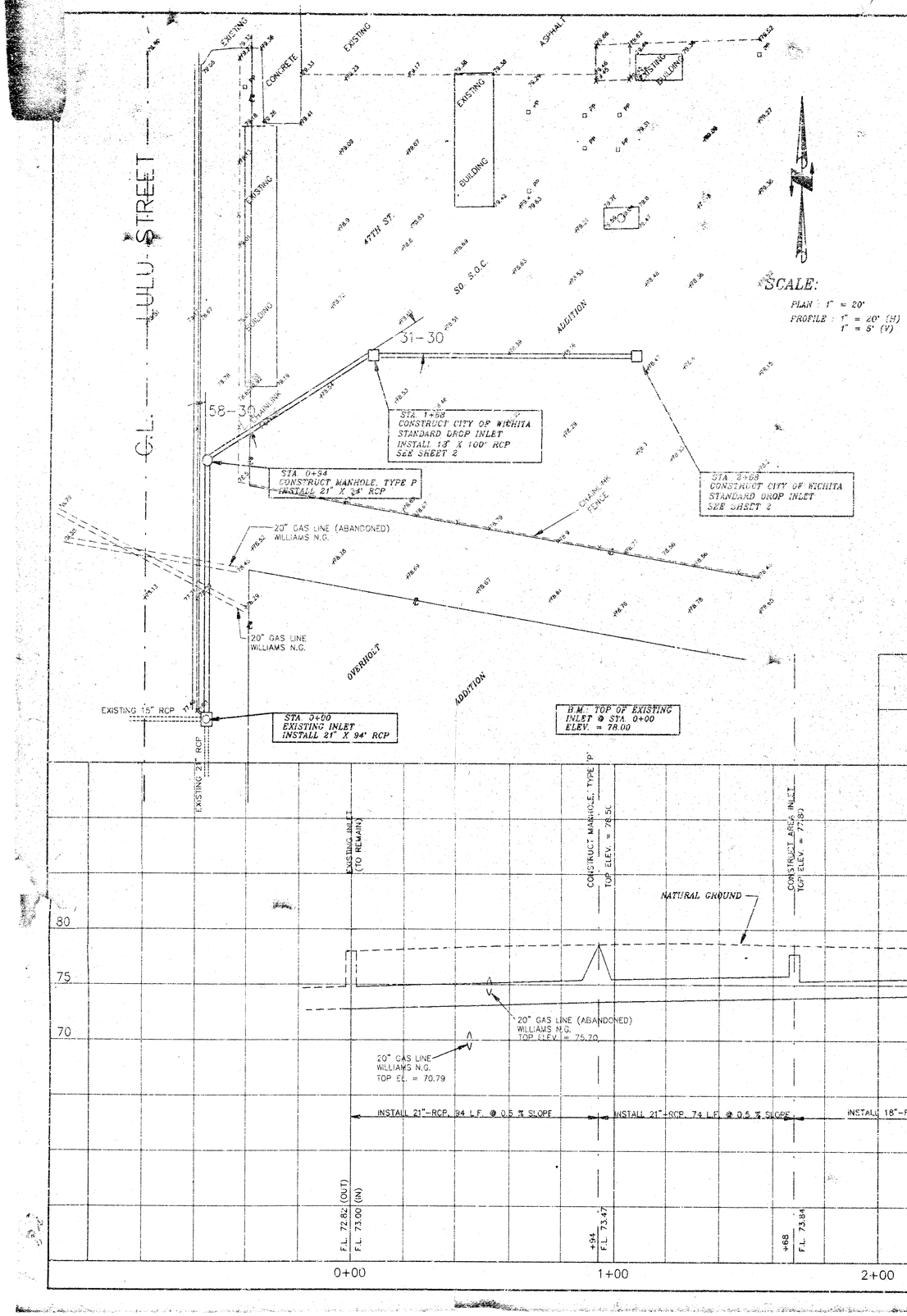

GENERAL NOTES

1. CONTRACTOR WILL BE REQUIRED TO PROVIDE A MINIMUM ADVANCE NOTICE OF TWENTY-FOUR (24) HOURS TO UTILITY COMPANIES PRIOR TO STARTING ANY EXCAVATION.

2. ALL WORK SHALL BE COMPLETED IN ACCORDANCE WITH CITY OF WICHITA, KANSAS STANDARD SPECIFICATIONS

3. EXISTING UTILITIES AND THEIR LOCATIONS, AS SHOWN ON THE PLANS, REPRESENT THE BEST INFORMATION OBTAINABLE FOR DESIGN. LOCATION INFORMATION HAS BEEN OBTAINED FROM THE VARIOUS UTILITY COMPANIES AND IS EITHER FROM COMPANY RECORD DRAWINGS OR COMPANY PROVIDED FIELD LOCATIONS. THE CONTRACTOR WILL BE REQUIRED TO WORK AROUND EXISTING UTILITIES WITHIN THE RIGHT-OF-WAY WHICH DO NOT CONFLICT WITH PROPOSED CONSTRUCTION.

4. RUBBLE FROM THE REMOVAL OF MISCELLANEOUS STRUCTURES AND EXCESS EXCAVATION WHICH IS TO BE WASTED SHALL BE DISPOSED OF ON SITES TO BE PROVIDED BY THE CONTRACTOR. THESE SITES SHALL BE APPROVED BY THE ENGINEER AS TO SUITABILITY, APPEARANCE AND SITE LOCATION. LOCATIONS THAT, IN THE OPINION OF THE ENGINEER, WILL LEAVE UNSIGHTLY APPEARANCE WILL NOT BE APPROVED.

5. THE CONTRACTOR SHALL RESPONSIBLE FOR PRESERVING PROPERTY IRONS. THE CONTRACTOR WILL BE REQUIRED TO RE-ESTABLISH ANY PROPERTY IRONS WHICH ARE DAMAGED OR DESTROYED BY HIS CONSTRUCTION OPERATIONS. SUCH IRONS SHALL BE RE-ESTABLISHED BY A LICENSED LAND SURVEYOR OR IN ACCORDANCE WITH STATE LAW.

6. GRASS AREAS DISTURBED BY CONSTRUCTION OR STORAGE OF MATERIALS SHALL BE REPLANTED EITHER BY SEEDING OR SODDING WITH THE SAME TYPE OF GRASS AS WAS EXISTING PRIOR TO WATER LINE CONSTRUCTION. SEE "SPECIAL PROVISIONS" IN THE STANDARD SPECIFICATION NO. 14533 FOR SEEDING AND SODDING OF COOL SEASON AND WARM SEASON GRASSES.

NOTE TO CONTRACTOR

INSPECTION AND TESTING FOR THIS PROJECT IS TO BE PROVIDED BY A LICENSED CONSULTANT ENGINEERING FIRM UNDER CONTRACT WITH THE OWNER/DEVELOPER. SAID INSPECTION TO BE IN ACCORDANCE WITH THE CITY OF WICHITA STANDARD ENGINEERING PRACTICES AND CERTIFIED BY A LICENSED PROFESSIONAL ENGINEER. NO WORK SHALL BE PERFORMED IN DEDICATED EASEMENTS OR PUBLIC RIGHT-OF-WAY BY THE CONTRACTOR WITHOUT SUCH INSPECTION NOR SHALL ANY WORK BE COMMENCED IN DEDICATED EASEMENTS OR PUBLIC RIGHT-OF-WAY WITHOUT WRITTEN AUTHORIZATION BY THE CITY ENGINEER.

APPROVED AS NOTED

BY CITY ENGINEER OF WICHITA

*Sanitary Sewers*_____

Storm Sewers V.R.H. 6/xx/93

*Driveway Approaches*_____

*Water Mains*_____

*Paving*_____

INDEX:

SHEET 1 PLAN-PROFILE SHEET

SHEET 2 DROP INLET DETAIL SHEET

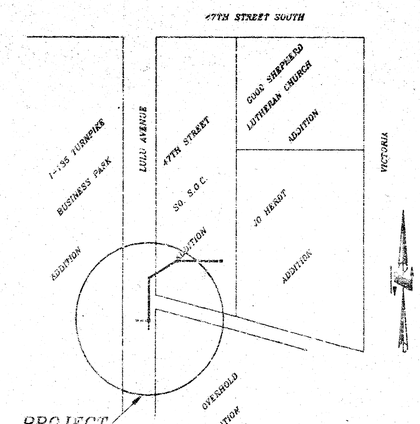

LOCATION MAP

SCALE : 1" = 150'

LEGEND

- EXISTING TREE
- GM GAS METER
- FH EXISTING FIRE HYDRANT
- LP EXISTING LIGHT POLE
- PP EXISTING POWER POLE
- CMP CORRUGATED METAL PIPE
- RCP REINFORCED CONCRETE PIPE
- 1216 EXISTING CONTOURS
- E 1205.67 EXISTING SPOT ELEVATIONS
- PM PARKING METER
- SIGN SIGNS
- TRAFFIC SIGNAL
- W UNDERGROUND WATER LINE
- T UNDERGROUND TELEPHONE
- E UNDERGROUND ELECTRICAL
- G UNDERGROUND GAS
- EWV EXISTING WATER VALVE
- EWM EXISTING WATER METER
- EMH EXISTING MANHOLE

STORM SEWER IMPROVEMENTS
TO SERVE 47TH ST. SO. S.O.C. ADDITION
WICHITA, KANSAS

SCALE: As Shown	APPROVED:	DRAWN BY:
DATE:		CHECKED:
PRIVATE PROJECT NO: SBSPPS(607861)	ME PROJECT NO: 93-15	SHEET NO.: 1 OF 2

MUNICIPAL ENGINEERS
254-LAURA, SUITE 201
WICHITA, KANSAS 67211
316-262-3842

NOTE: Grates shall be imprinted on the top surface with "CITY OF WICHITA" using letters at least 1" in height. Other marking methods may be used only if approved by the engineer.

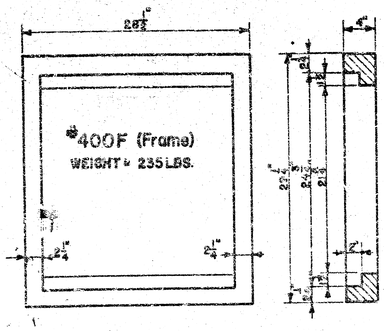

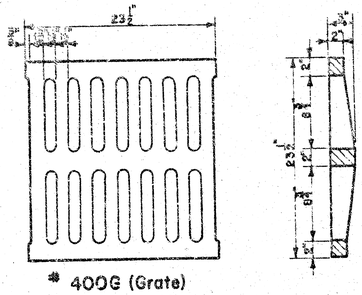

24"x24" Frame & Grate Detail

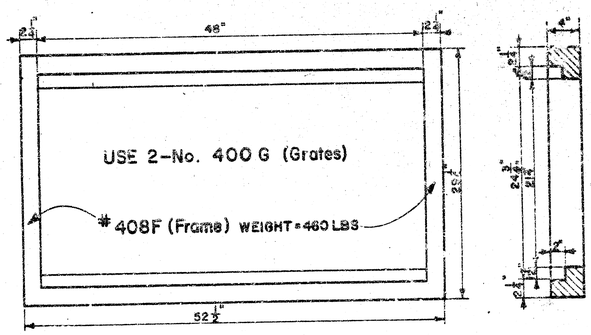

Double 24"x24" Frame Detail

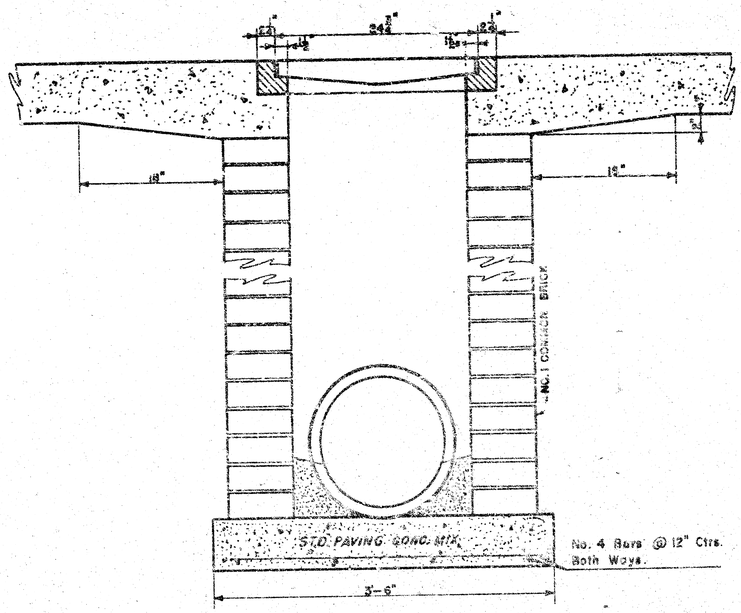

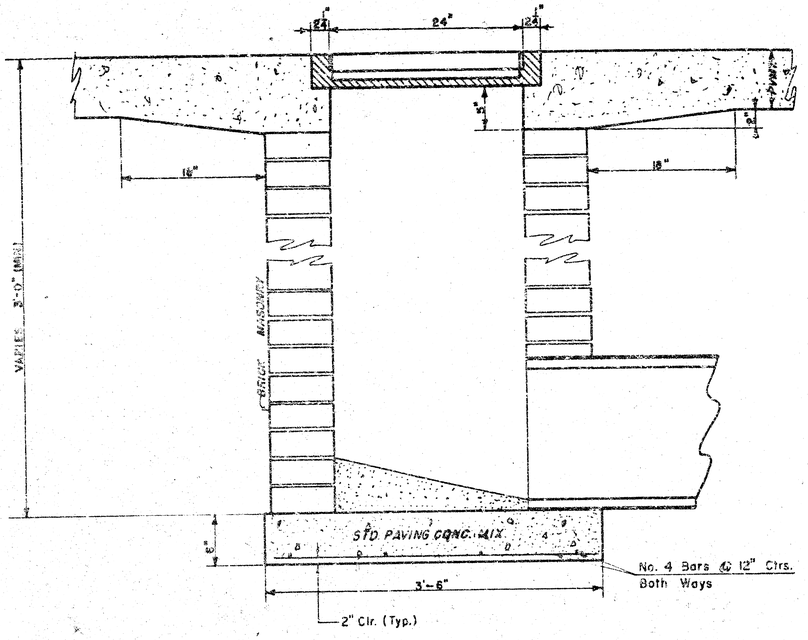

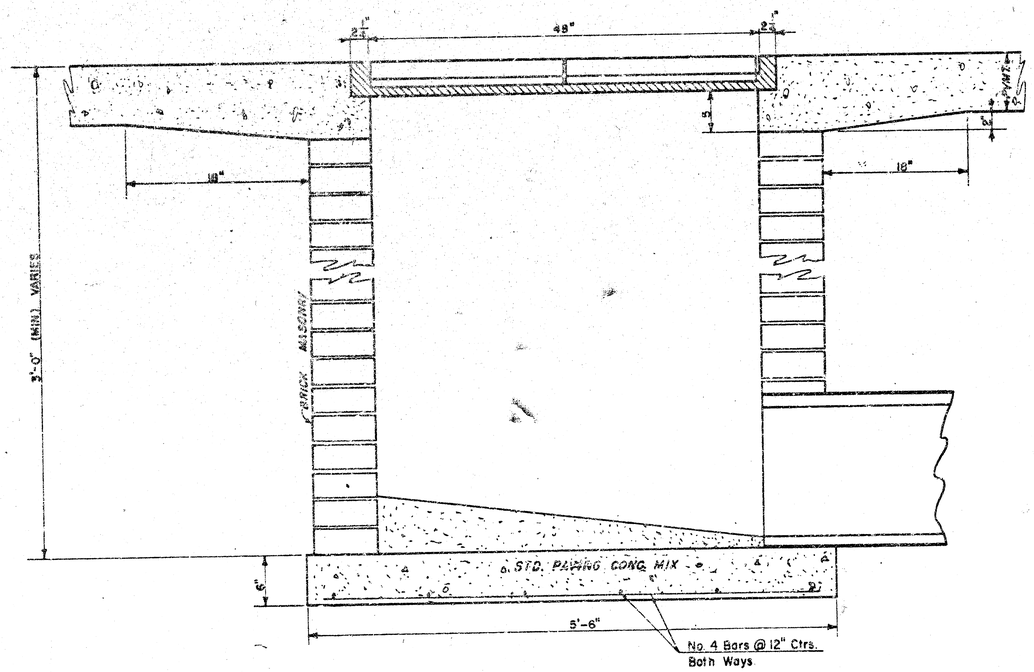

SHEET 2 OF 2

DROP INLET DETAILS

M.E. Lindebak, City Engineer

City of Wichita, Kansas

Project STORM SEWER IMPROVEMENTS TO SERVE 47TH ST. SO. S.C. ADDITION

Project No. 395PPS (607861)

Date: 6-9-93

Scale: 1-1/2" = 1'-0"

6-1-93