CONSTRUCTION PLANS FOR

STORM WATER IMPROVEMENTS

TO SERVE

LOT 4, COMOTARA POWER CENTER ADDITION

THE CITY OF WICHITA,

SEDGWICK COUNTY, KANSAS

MICHAEL E. LINDEBAK, P.E. - CITY ENGINEER

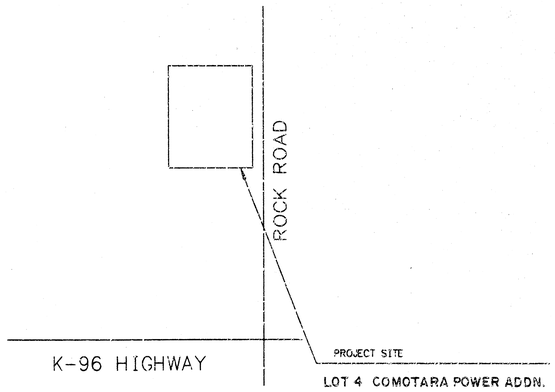

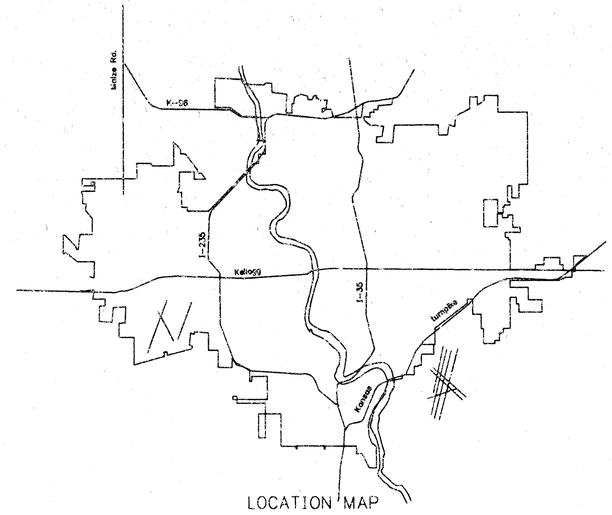

LOCATION MAP

INDEX OF SHEET

SHEET NO. 1 TITLE SHEET
SHEET NO. 2 PLAN/PROFILE
SHEET NO. 3 STANDARD DETAILS

APPROVED AS NOTED

By CITY ENGINEER OF WICHITA

Sanitary Sewers _____

Storm Sewers VRH 12/22/93

Driveway Approaches _____

Water Mains _____

Paving _____

NOTE TO CONTRACTOR

INSPECTION AND TESTING FOR THIS PROJECT IS TO BE PROVIDED BY A LICENSED CONSULTING ENGINEERING FIRM UNDER CONTRACT WITH THE OWNER/DEVELOPER. SAID INSPECTION TO BE IN ACCORDANCE WITH THE CITY OF WICHITA STANDARD CONSTRUCTION ENGINEERING PRACTICES AND CERTIFIED BY A LICENSED PROFESSIONAL ENGINEER. NO WORK SHALL BE PERFORMED IN DEDICATED EASEMENTS OR THE PUBLIC RIGHT-OF-WAY BY THE CONTRACTOR WITHOUT SUCH INSPECTION NOR SHALL ANY WORK BE COMMENCED IN DEDICATED EASEMENTS OR PUBLIC RIGHT-OF-WAY WITHOUT WRITTEN AUTHORIZATION BY THE CITY ENGINEER.

CITY OF WICHITA PROJECT NO. 430PPS(607861)

DECEMBER, 1993

PLANS PREPARED BY

BOOKER ASSOCIATES, INC. OF KANSAS

WICHITA, KANSAS

STEVEN K. BACHMAN — LICENSED — 12/31/95 — 701 — KANSAS — PROFESSIONAL ENGINEER

CITY OF WICHITA PROJECT NO. 430PPS(607861)

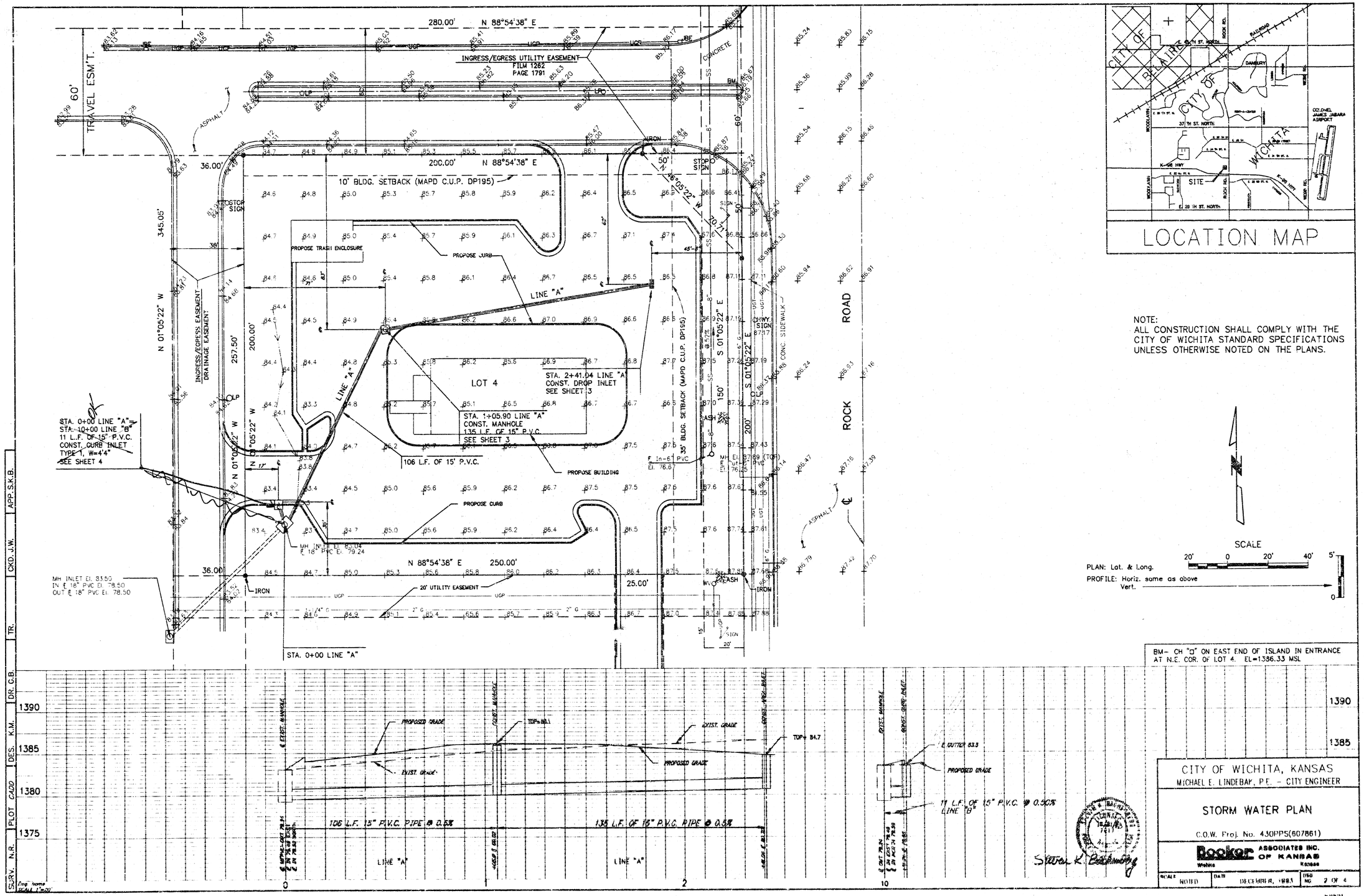

LOCATION MAP

NOTE:
ALL CONSTRUCTION SHALL COMPLY WITH THE CITY OF WICHITA STANDARD SPECIFICATIONS UNLESS OTHERWISE NOTED ON THE PLANS.

SCALE
20' 0 20' 40' 5'
PLAN: Lat. & Long.
PROFILE: Horiz. same as above
Vert.

BM- CH "□" ON EAST END OF ISLAND IN ENTRANCE AT N.E. COR. OF LOT 4. EL=1386.33 MSL

CITY OF WICHITA, KANSAS
MICHAEL E. LINDEBAK, P.E. - CITY ENGINEER

STORM WATER PLAN

C.O.W. Proj. No. 430PPS(607861)

Booker ASSOCIATES INC. OF KANSAS
Wichita Kansas

SCALE NOTED | DATE DECEMBER, 1993 | DWG NO. 2 OF 4

K8801

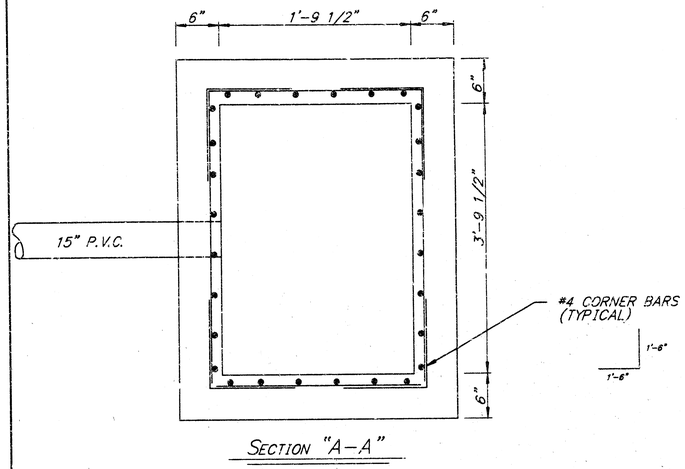

SECTION "A-A"

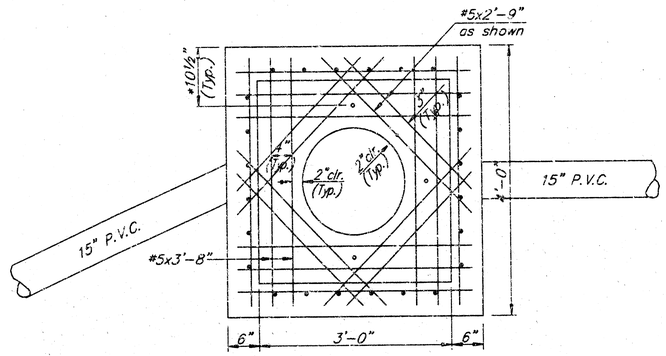

SECTION B-B

(Slab Plan)

* Verify before casting.

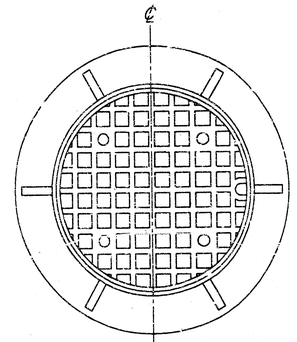

PLAN

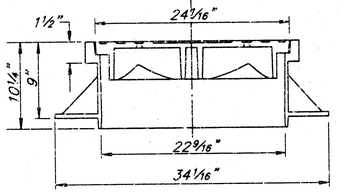

ELEVATION

MANHOLE RING AND VENTED COVER

NOTE:
CONTRACTOR SHALL VERIFY INLET DIM. WITH FRAME AND GRATE ORDERED, PRIOR TO POURING INLET.

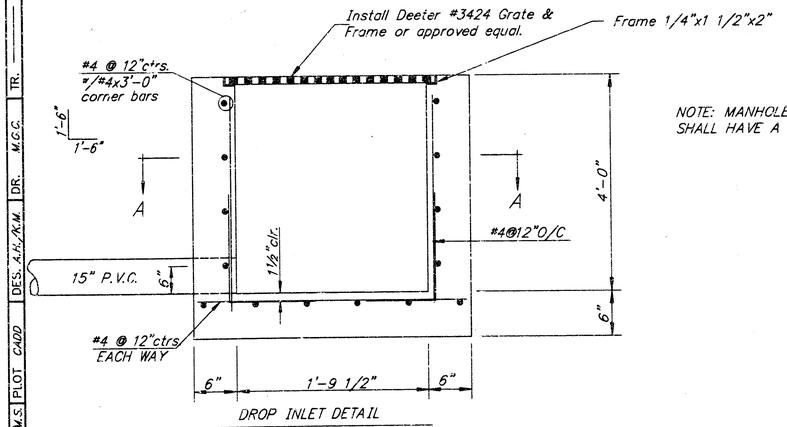

DROP INLET DETAIL

NOTE: MANHOLE AND AREA INLET SHALL HAVE A POURED INVERT.

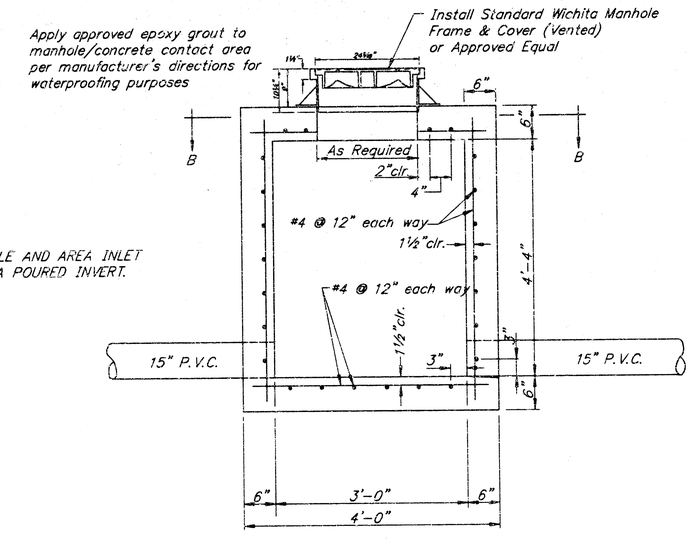

ELEVATION

SHALLOW MANHOLE

NOTE:

1. Use 3,000 p.s.i. (min.) Class AAA Concrete @ 28 days with 5%-7% air entrainment.
2. All reinforcing shall conform to ASTM A 615 Grade 40 (40,000 p.s.i. min. yield) securely tied.
3. All construction and materials shall comply with the City of Wichita specifications and standards.

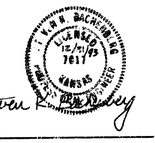

Steven R. Dailey

CITY OF WICHITA, KANSAS
MICHAEL E. LINDEBAK, P.E. - CITY ENGINEER

STORM WATER DETAILS

C.O.W. Proj. No. 430PPS(607861)

Booker ASSOCIATES INC. OF KANSAS
Wichita Kansas

SCALE	DATE	DWG. NO.
NONE	DECEMBER, 1993	3 OF 4

K9501

SURV. D.V./M.S. | PLOT CADD | DES. A.H./K.M. | DR. M.G.C. | TR. | CKD. K.M. | APP. S.K.B.

\K9501-02\INLET
SCALE 1"=10'

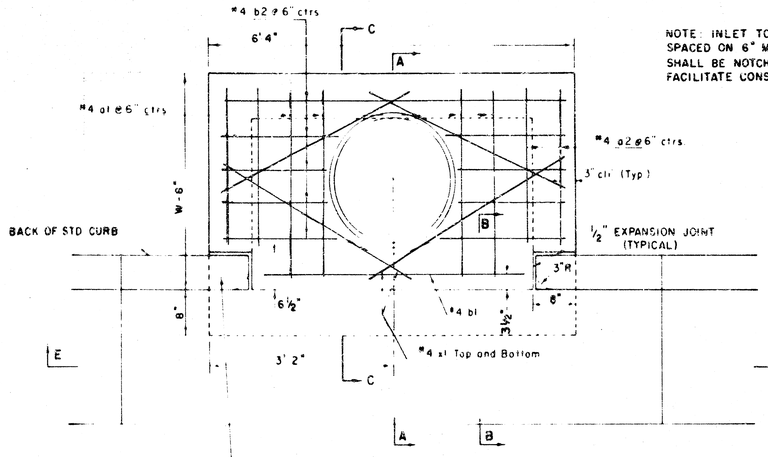

PLAN

WARP CURB TO MATCH INLET TOP WITH 1' MIN TRANSITION LENGTH

NOTE: INLET TOP REINFORCING SHALL BE SPACED ON 6" MAX. CENTERS. INLET LIDS SHALL BE NOTCHED OUT AS INDICATED TO FACILITATE CONSTRUCTION OF CURB.

NOTE: CONCRETE TOPS TO BE INSTALLED ON THIN MORTAR CUSHION TO INSURE FULL SUPPORT ALONG BRICK WALLS. CONCRETE TOPS MAY BE CAST IN PLACE OR PRECAST. CONCRETE USED FOR INLET CONSTRUCTION SHALL BE CONCRETE PAVEMENT MIX.

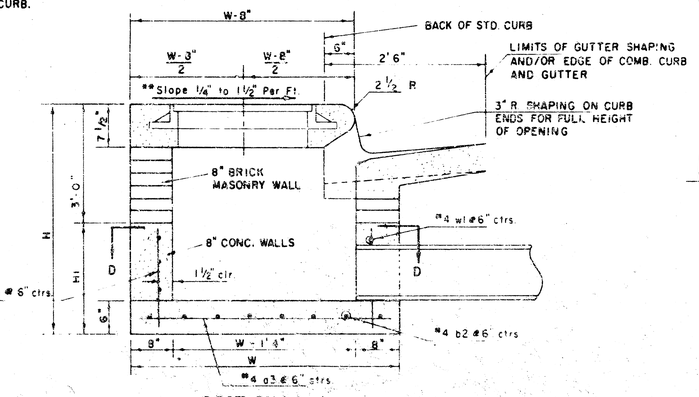

SECTION A-A

** NOTE: Slope of Inlet Tops to match Sidewalk or Parking Slopes within Limits Indicated

NOTE: CONTRACTOR SHALL HAVE THE OPTION OF CONSTRUCTING 8" BRICK MASONRY WALLS BETWEEN THE CONCRETE INLET BASE AND TOP ON THIS INLET WHEN W = 6'4" AND H = 7'0" OR LESS.

INLET INVERT SHALL BE SHAPED WITH A SAC SAND MIX CONCRETE TO CREATE FLOW CHANNELS AND TO INCREASE HYDRAULIC EFFICIENCY SUCH THAT THE INLET WILL BE SELF CLEANING BETWEEN ALL INLET AND/OR OUTLET PIPES.

THE ENDS OF ALL PIPES INSTALLED IN INLETS SHALL BE CUT OFF FLUSH WITH THE INSIDE FACE OF THE INLET WALL.

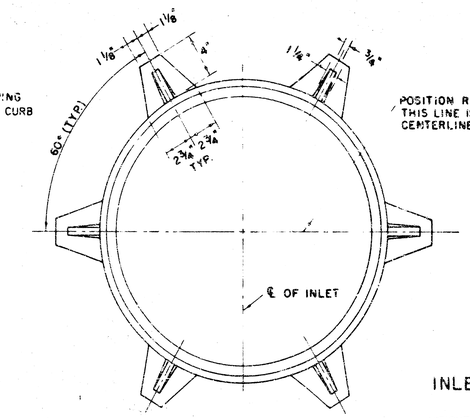

INLET FRAME

WEIGHT = 180 LBS.

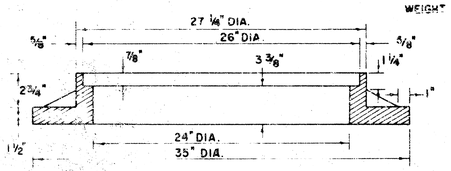

SEE CITY OF WICHITA STANDARD MANHOLE FRAME AND COVER DETAIL SHEET FOR COVER DETAILS TO BE USED WITH INLET FRAME.

PRECAST SLAB AND FLOOR REINFORCING												
		W = 4'-4"		W = 5'-4"		W = 6'-4"		W = 7'-4"		W = 8'-4"	
Mark	Size	No.	Length	No.	Length	No.	Length	No.	Length	No.	Length
*a1	#4	6	6'-7"	6	8'-7"	6	10'-7"	6	12'-7"	6	14'-7"
a2	#4	4	6'-0"	4	8'-0"	4	10'-0"	4	12'-0"	4	14'-0"
a3	#4	13	4'-1"	13	5'-1"	13	6'-1"	13	7'-1"	13	8'-1"
b1	#4	1	4'-9"	1	4'-9"	1	4'-9"	1	4'-9"	1	4'-9"
*b2	#4	23	6'-1"	29	6'-1"	35	6'-1"	41	6'-1"	47	6'-1"
x1	#4	8	3'-10"	8	4'-2"	8	4'-6"	8	4'-10"	8	5'-2"
WALL REINFORCING											
		W = 4'-4"		W = 5'-4"		W = 6'-4"		W = 7'-4"		W = 8'-4"	
Mark	Size	No.	Length	No.	Length	No.	Length	No.	Length	No.	Length
w1	#4	①	6'-1"	①	6'-1"	①	6'-1"	①	6'-1"	①	6'-1"
w2	#4	①	4'-1"	①	5'-1"	①	6'-1"	①	7'-1"	①	8'-1"
w3	#4	32	②	36	②	40	②	44	②	48	②

* Field bend or cut Reinforcing as required for clearance.

① 4(H1-12"); (H1-12") Round down to nearest 0.5'

② H1-3"

STANDARD CURB INLET PRECAST TOPS					
W	PRE-CAST TOP SIZE		PIPE SIZE	CU. YD. CONC.
4'4"	3'8"	6'4" 7 1/2"	21" & SMALLER	0.38 ±
5'4"	4'8"	6'4" 7 1/2"	24" & 30"	0.51 ±
6'4"	5'8"	6'4" 7 1/2"	36" & 42"	0.64 ±
7'4"	6'8"	6'4" 7 1/2"	48" & 54"	0.77 ±
8'4"	7'8"	6'4" 7 1/2"	60" & 66"	0.90 ±

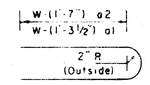

BENDING DIAGRAM

SECTION B-B

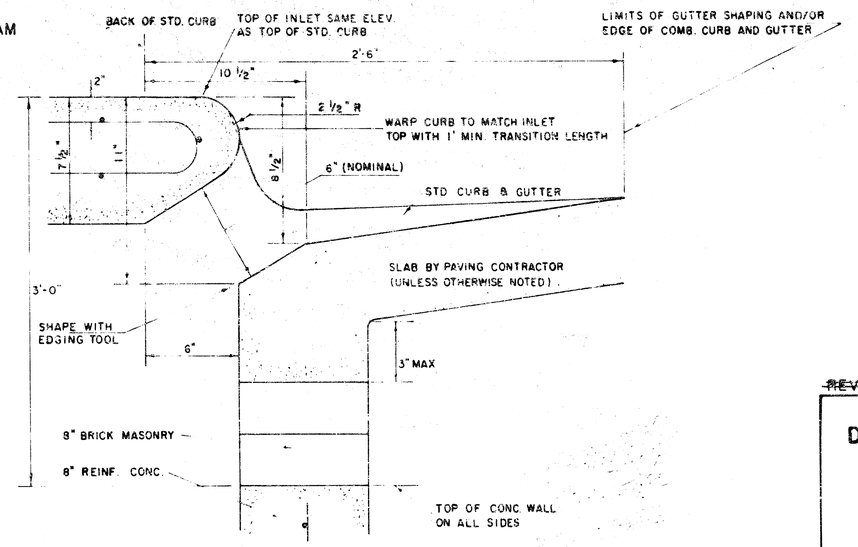

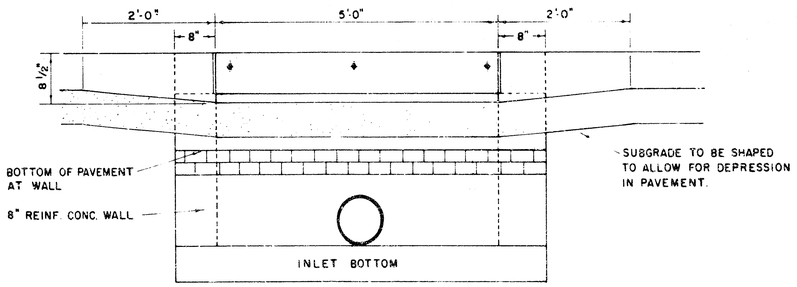

SECTION E-E

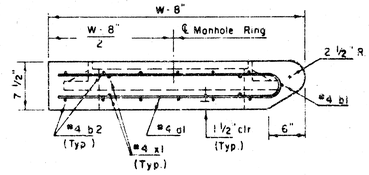

SECTION C-C

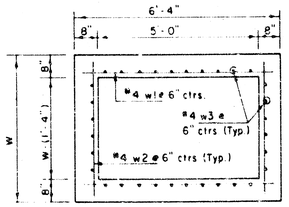

SECTION D-D

COW Proj. No. 430PPS(607861)

~~REVISED 12-21-1984~~ REVISED 2-15-1989

DETAIL STANDARD TYPE I CURB INLET

CITY OF WICHITA, KANSAS

INLET OPENING = 6" x 5'0"

JUNE 1984

SHEET 4 OF 4

[redacted]