SHEET NO. SG-0

PLANS FOR

STORM WATER SEWER IMPROVEMENTS

FOR

LOT 1, BLOCK 1
LAKESIDE PARK ADDITION

WICHITA, KANSAS

CITY OF WICHITA PRIVATE PROJECT NO. **451PPS (607861)**

INDEX OF SHEETS

SG-0 TITLE SHEET
SG-1 SITE GRADING AND UTILITY PLAN
SG-2 SWS LINE NO. 1 PROFILE
SG-3 MISCELLANEOUS DETAILS
SG-4 TYPE 1A CURB INLET
SG-5 R.C. MANHOLE
SG-6 MANHOLE FRAME AND COVER
SG-7 SEDIMENT CONTROL

MARCH, 1994

PLANS PREPARED BY
PROFESSIONAL ENGINEERING CONSULTANTS, P.A.
ENGINEERS
WICHITA, KANSAS

Booked
E-1
8/14/03
RDL

3-11-94

APPROVED AS NOTED
BY CITY ENGINEER OF WICHITA

SANITARY SEWERS _____

STORM SEWERS VRH 3/15/94

DRIVEWAY APPROACHES _____

WATER MAINS _____

PAVING _____

NOTE TO CONTRACTOR

INSPECTION AND TESTING FOR THIS PROJECT IS TO BE PROVIDED BY A LICENSED CONSULTING ENGINEERING FIRM UNDER CONTRACT WITH THE OWNER/DEVELOPER. SAID INSPECTION TO BE IN ACCORDANCE WITH THE CITY OF WICHITA STANDARD CONSTRUCTION ENGINEERING PRACTICES AND CERTIFIED BY A LICENSED PROFESSIONAL ENGINEER. NO WORK SHALL BE PERFORMED IN DEDICATED EASEMENTS OR PUBLIC RIGHT-OF-WAY BY THE CONTRACTOR WITHOUT SUCH INSPECTION NOR SHALL ANY WORK BE COMMENCED IN DEDICATED EASEMENTS OR PUBLIC RIGHT-OF-WAY WITHOUT WRITTEN AUTHORIZATION BY THE CITY ENGINEER.

7-2 KS TITLE

DATE LAST WORKED ON

DAR CRONK

SHEET NO.	TOTAL SHEETS
SG-1	7

SITE GRADING AND UTILITY PLAN

RITCHIE CORPORATE OFFICE

PROFESSIONAL ENGINEERING CONSULTANTS, P.A.
ENGINEERS
WICHITA, KANSAS

Designed by	DRC	Checked by	MWB	
Drawn by	DEP	Date MAY, 1994	Job No.	93

SCALE: 1"=30'

DATUM B.M. - CHISELED "O" ON EAST TOP OF CURB OF WILD ROSE ON SOUTH SIDE OF ENTRANCE TO SEWAGE LIFT STATION OPPOSITE LOT 14, BLOCK 1, REFLECTION RIDGE 6TH ADDITION. ELEV.=139.63

B.M. - CHISELED "O" ON TOP OF HEADWALL EAST SIDE RIDGE ROAD 30' SOUTH OF NW CORNER MERE RIDGE. ELEV.=136.545

B.M. - RR SPIKE WEST FACE POWER POLE AT NW CORNER LOT 1, BLOCK 1, LAKESIDE PARK ADDITION. ELEV.=139.695

B.M. - RR SPIKE IN SW FACE LIGHT POLE AT NE END WEDGEWOOD. ELEV.=139.055

LEGEND

- ○ IRON SET
- ♦ WARP GUTTER PAN TO DRAIN TO INLET
- H.P. HIGH POINT
- PAVEMENT REMOVAL
- HEAVY DUTY PAVEMENT
- (D1) 2'X2' AREA INLET. TOP ELEV.=141.3, ℄ ELEV.=136.5 CONNECT 4" R.L. AND O.R.L. BY PLUMBING CONTRACTOR INSTALL INLET PROTECTION. SEE SH. NO. SG-6 AND 8
- (D2) 2'X2' AREA INLET. TOP ELEV.=141.3, ℄ ELEV.=135.5 INSTALL 88 L.F. 8" R.L. (W) CONNECT 4" R.L. AND O.R.L. BY PLUMBING CONTRACTOR INSTALL INLET PROTECTION. SEE SH. NO. SG-6 AND 8
- (S1) CONNECT TO 15" STUB IN MANHOLE
- (S2) CONNECT TO 2-WAY CLEANOUT BY PLUMBING CONTRACTOR
- (W1) TAP 8" MAIN BY WATER DEPARTMENT
- (W2) METER IN VAULT. METER PROVIDED BY THE CITY SEE SH. NO. SG-3
- (W3) FIRE HYDRANT AND FIRE PROTECTION MAIN AND APPURTENANCES BY FIRE PROTECTION CONTRACTOR

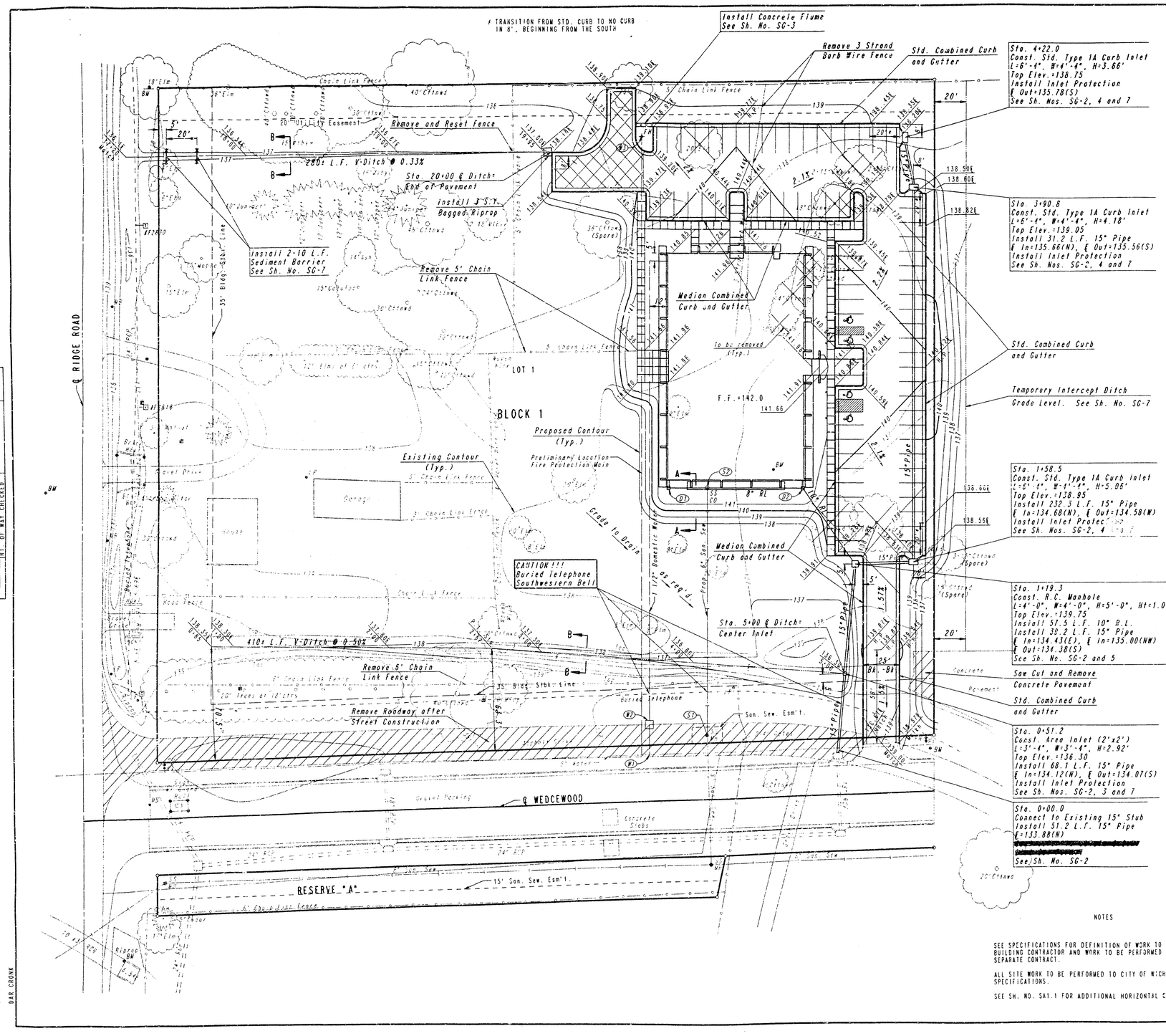

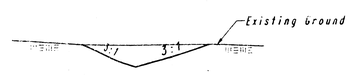

SECTION B-B

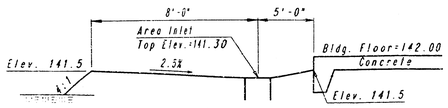

SECTION A-A

NOTES

SEE SPECIFICATIONS FOR DEFINITION OF WORK TO BE PERFORMED BY BUILDING CONTRACTOR AND WORK TO BE PERFORMED BY OWNER UNDER SEPARATE CONTRACT.

ALL SITE WORK TO BE PERFORMED TO CITY OF WICHITA STANDARD SPECIFICATIONS.

SEE SH. NO. SA1.1 FOR ADDITIONAL HORIZONTAL CONTROL.

PLAN SURVEYED BY FIELD NOTE BOOK NO. ____ PAGE NO. ____ (CURRENT, CHECKED AS OF WAY CHECKED)

DRAWING NAME: 38-93469 RITCHE OFF SITE
POINT OF BEGINNING (P.O.B.):
CENTER COORDINATES:
ROTATION ANGLE:
DATE LAST WORKED ON:
DAR CRONK

DRAWING NAME:
LOCATION: D4 #
CENTER COORDIN
ROTATION ANGLE
DATE LAST WORKED ON:
DAR CRONK

PROFILE		BY	DATE
NOTE BOOK NO.	SURVEYED		
	PLOTTED		
	GRADES CHECKED/KED		
	B.M.s NOTED		
	STRUCTURE NOTES CH'KD		

PLAN		BY	DATE
NOTE BOOK NO.	SURVEYED		
	PLOTTED		
	ALIGNMENT CHECKED		
	RT. OF WAY CHECKED		

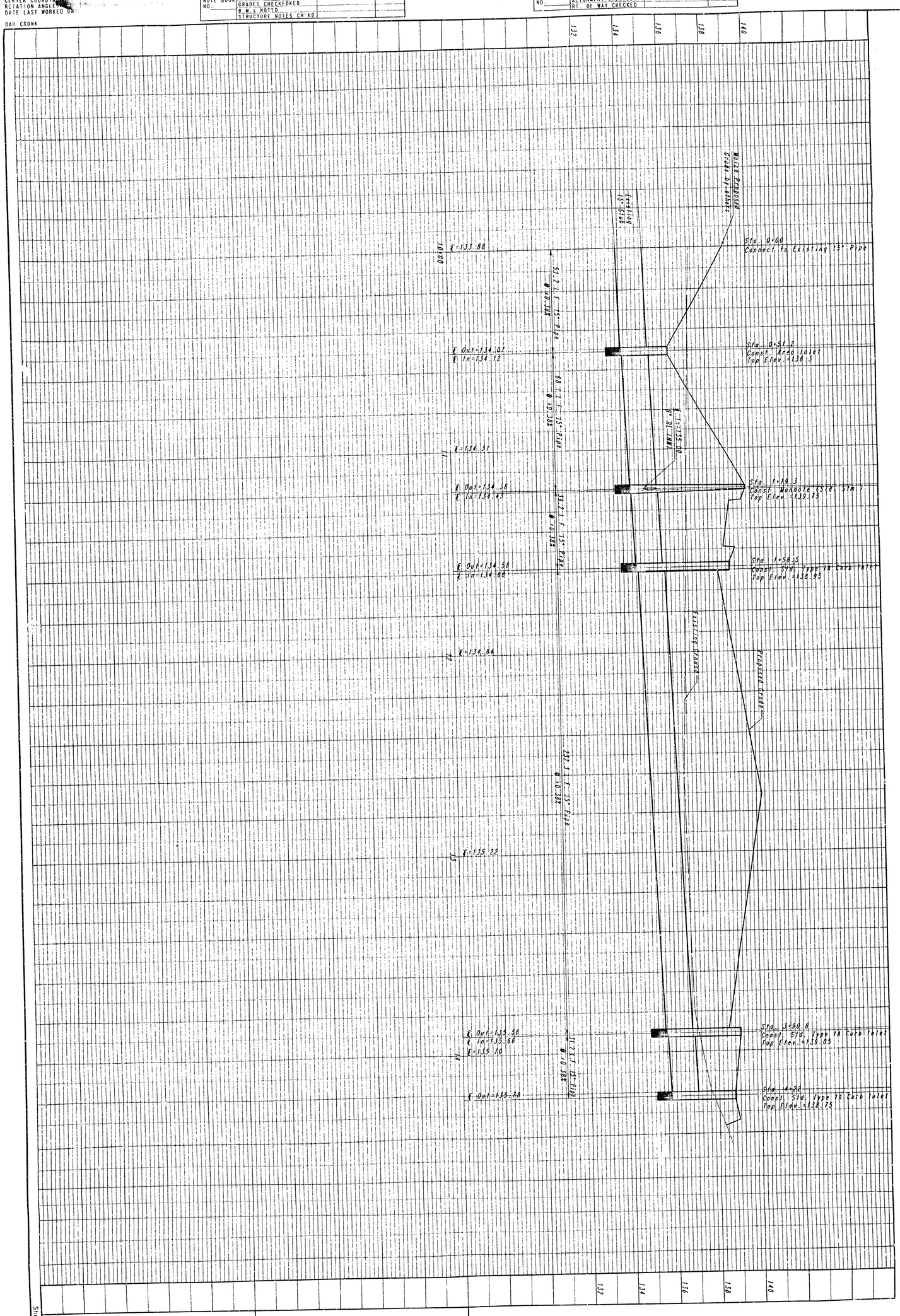

Sheet SG-2

PROFESSIONAL ENGINEERING CONSULTANTS, P.A.
ENGINEERS
WICHITA, KANSAS

Job No. 36-93489
Date MAR., 1994

SWS LINE NO. 1
PROFILE

RITCHIE CORPORATE OFFICE

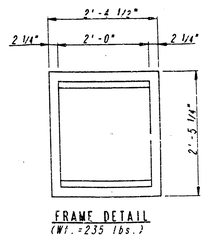

FRAME DETAIL
(Wt.=235 lbs.)

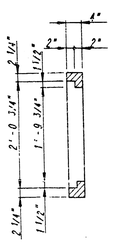

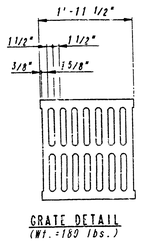

GRATE DETAIL
(Wt.=180 lbs.)

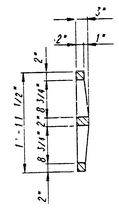

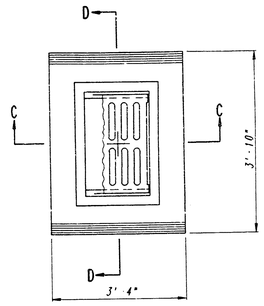

PLAN

GENERAL NOTES

CONCRETE SHALL BE C.O.W. STANDARD PAVING MIX. ALL EXPOSED EDGES SHALL BE FINISHED WITH AN APPROVED EDGING TOOL.

REINFORCING STEEL SHALL BE A MINIMUM GRADE 40, A.S.T.M. A615. ALL DIMENSIONS RELATIVE TO PLACEMENT OF REINFORCING ARE TO THE CENTERLINE OF BARS UNLESS OTHERWISE NOTED.

INLET CASTINGS SHALL BE MANUFACTURED USING GOOD QUALITY GRAY IRON CONFORMING TO CLASS 30 OF A.S.T.M. DESIGNATION A-48. DIMENSIONS AND WEIGHTS SHOWN ON THE DETAILED DRAWINGS SHALL BE CONSIDERED AS MINIMUM REQUIREMENTS AND ANY DEVIATIONS FROM THE DIMENSIONS SHOWN MUST BE SPECIFICALLY APPROVED. THE FINISHED CASTINGS SHALL BE OF UNIFORM QUALITY, FREE FROM BLOWHOLES, POROSITY, HARD SPOTS, SHRINKAGE DISTORTIONS OR OTHER EFFECTS.

CONSTRUCTION REQUIREMENTS AND MATERIALS FOR MASONRY WALLS SHALL CONFORM TO THE REQUIREMENTS OF THE STANDARD SPECIFICATIONS.

INLET FLOOR SHALL BE SHAPED WITH UNREINFORCED CONCRETE (8 SACK SAND MIX) TO CREATE FLOW CHANNELS AND TO INCREASE HYDRAULIC EFFICIENCY SUCH THAT THE INLET WILL BE SELF CLEANING BETWEEN ALL INLET AND/OR OUTLET PIPES.

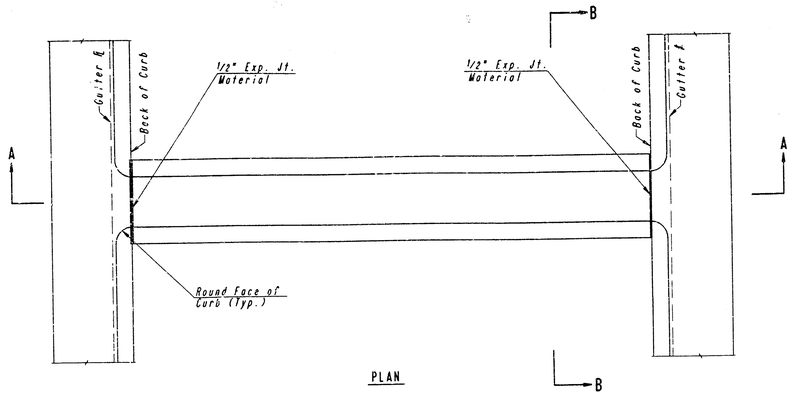

PLAN

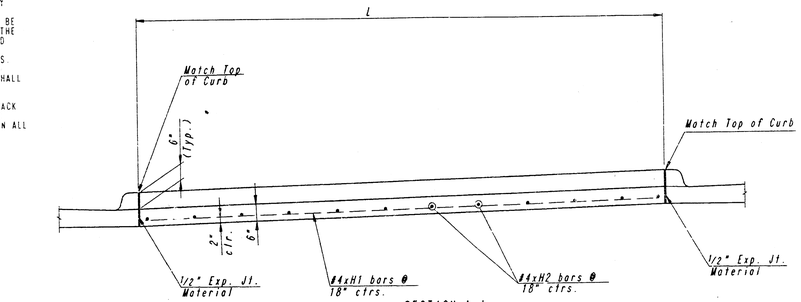

SECTION A-A

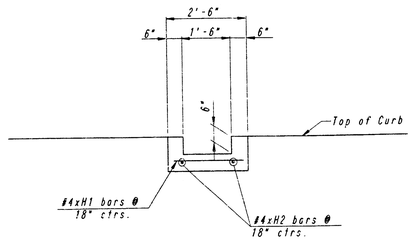

SECTION B-B

SIDEWALK FLUME DETAILS

GENERAL NOTES

CLASS A CONCRETE (6E), OR THE MIX USED FOR CONCRETE PAVEMENT MAY BE USED THROUGHOUT. ALL EXPOSED EDGES SHALL BE FINISHED WITH AN EDGING TOOL.
THE CHECKERED STEEL PLATE SHALL HAVE A RAISED LUG PATTERN AND SHALL BE EITHER SHOP OR FIELD PAINTED WITH ONE COAT OF ZINC DUST PAINT FOLLOWED BY TWO FIELD COATS OF ALUMINUM PAINT (TOP AND BOTTOM).

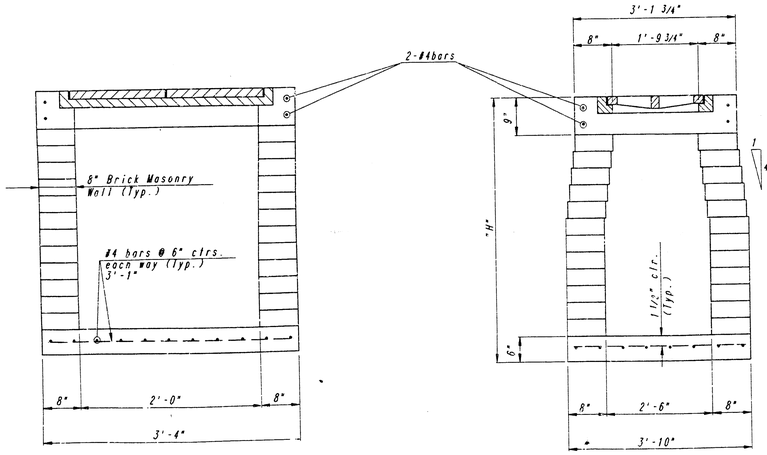

SECTION C-C

SECTION D-D

AREA INLET (TYPE I)

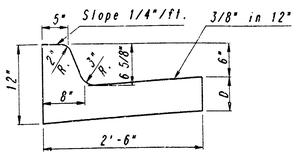

STANDARD COMBINED CURB & GUTTER
(6 5/8")

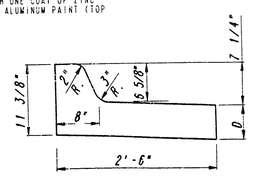

MEDIAN COMBINED CURB & GUTTER
(6 5/8")

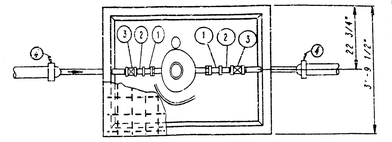

Manufacturer:
Clutter Equipment Co.
5411 N. 119th. St. W.
Maize, Kansas 67101

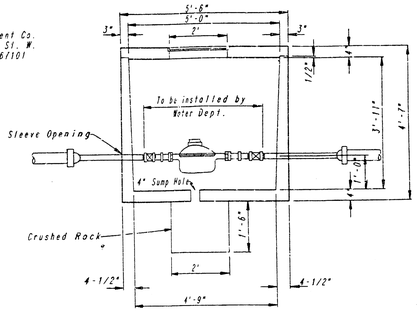

STANDARD VAULT FOR SINGLE 2" METERS

STANDARD VAULT FOR SINGLE 2" METER

1	Ford Lok - Pak Meter Couplings
2	2"x 4" or 2"x 6" Nipple
3	2" Bronze Gate Valve, Wheel Operated
4	4" CIW, Cap - Tapped 2"

NOTES:

1. When the standard vault dimensions are not applicable, such as when additional space is required for special pipe fittings, additional meters, etc., the department shall design a vault with the required dimensions.
2. When it becomes necessary to locate a vault in an area where it will be subjected to vehicular loads, the top will be designed to satisfy the conditions as set forth in Ordinance No. 12-588, Paragraph 2804, of the City of Wichita, Kansas.
3. Vault location to be determined by Water Dept. prior to Construction.
4. Manhole Ring and Lid to be Clay & Bailey, K.C. Mo.; Type "B", Deeter Foundry, INC. #2000 with 1" pick holes; or Neenah R-6034 Frame with Type "C" Solid lid and drop handle.
5. The Mechanical Contractor shall provide a 2" Male iron pipe thread on end of service pipe, meter coupling(s), nipple(s), and valve(s).
6. Meter provided by Water Dept.

SHEET NO.	TO SHEET
SG-3	

MISCELLANEOUS DETAILS

WITCHIE CORPORATE OFFICE

PROFESSIONAL ENGINEERING CONSULTANTS, P.A.
ENGINEERS
WICHITA, KANSAS

Designed by	DRC	Checked by	
Drawn by	DEP	Date MAR., 1994	Job No.

DATE	BY	PLAN
		SURVEYED
		PLOTTED
		ALIGNMENT CHECKED
		BY OF MAT CHECKED

NOTE BOOK
NO.

CENTER COORDINATES:
ROTATION ANGLE:
DATE LAST WORKED ON:
DAN CROWN

89 MISC DTLS

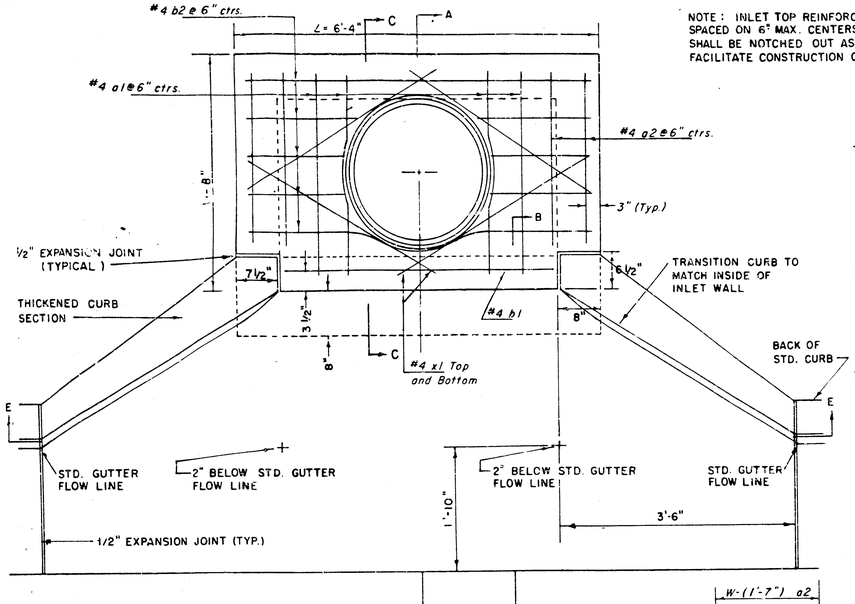

NOTE: EXPANSION JOINT ONLY IN CURB AREA WITH CONC. PAVEMENT.

PLAN

NOTE: INLET TOP REINFORCING SHALL BE SPACED ON 6" MAX. CENTERS. INLET LIDS SHALL BE NOTCHED OUT AS INDICATED TO FACILITATE CONSTRUCTION OF CURB.

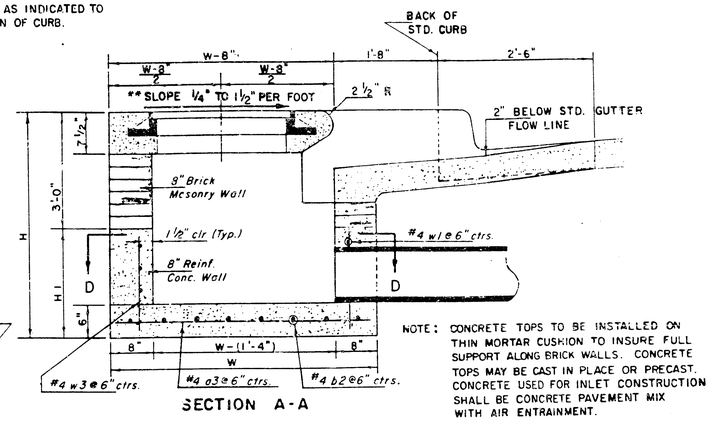

SECTION A-A

NOTE: CONCRETE TOPS TO BE INSTALLED ON THIN MORTAR CUSHION TO INSURE FULL SUPPORT ALONG BRICK WALLS. CONCRETE TOPS MAY BE CAST IN PLACE OR PRECAST. CONCRETE USED FOR INLET CONSTRUCTION SHALL BE CONCRETE PAVEMENT MIX WITH AIR ENTRAINMENT.

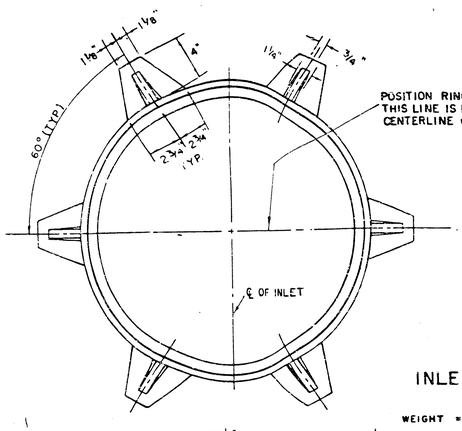

INLET FRAME

WEIGHT = 180 LBS.

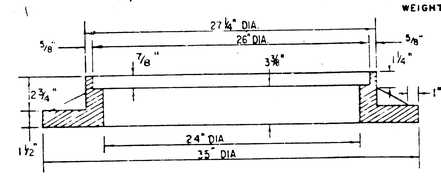

SEE CITY OF WICHITA STANDARD MANHOLE FRAME AND COVER DETAIL SHEET FOR COVER DETAILS TO BE USED WITH INLET FRAME.

NOTE: CONTRACTOR SHALL HAVE THE OPTION OF CONSTRUCTING 8" BRICK MASONRY WALLS BETWEEN THE CONCRETE INLET BASE AND TOP ON THIS INLET WHEN W = 6'4" AND H = 7'0" OR LESS.

ADDITIONAL CURB AND GUTTER CONSTRUCTION NECESSARY TO CONNECT SET-BACK INLET TO PAVEMENT WILL BE PAID FOR AT THE UNIT PRICE BID FOR EACH INLET HOOKUP.

INLET INVERT SHALL BE SHAPED WITH 8 SACK SAND MIX CONCRETE TO CREATE FLOW CHANNELS AND TO INCREASE HYDRAULIC EFFICIENCY SUCH THAT THE INLET WILL BE SELF CLEANING BETWEEN ALL INLET AND/OR OUTLET PIPES.

THE ENDS OF ALL PIPES INSTALLED IN INLETS SHALL BE CUT OFF FLUSH WITH THE INSIDE FACE OF THE INLET WALL.

** NOTE: Slope of inlet Tops to match Sidewalk or Parking Slopes within Limits indicated.

PRECAST SLAB AND FLOOR REINFORCING												
		W=4'-4"		W=5'-4"		W=6'-4"		W=7'-4"		W=8'-4"		
Mark	Size	No.	Length	No.	Length	No.	Length	No.	Length	No.	Length	
a1	#4	6	6'-7"	6	8'-7"	6	10'-7"	6	12'-7"	6	14'-7"	
a2	#4	4	6'-0"	4	8'-0"	4	10'-0"	4	12'-0"	4	14'-0"	
a3	#4	13	4'-1"	13	5'-1"	13	6'-1"	13	7'-1"	13	8'-1"	
b1	#4	1	4'-9"	1	4'-9"	1	4'-9"	1	4'-9"	1	4'-9"	
*b2	#4	23	6'-1"	29	6'-1"	35	6'-1"	41	6'-1"	47	6'-1"	
x1	#4	8	3'-10"	8	4'-2"	8	4'-6"	8	4'-10"	8	5'-2"	
WALL REINFORCING												
		W=4'-4"		W=5'-4"		W=6'-4"		W=7'-4"		W=8'-4"		
Mark	Size	No.	Length	No.	Length	No.	Length	No.	Length	No.	Length	
w1	#4	①	6'-1"	①	6'-1"	①	6'-1"	①	6'-1"	①	6'-1"	
w2	#4	①	4'-1"	①	5'-1"	①	6'-1"	①	7'-1"	①	8'-1"	
w3	#4	32	②	36	②	40	②	44	②	48	②	

* Field bend or cut Reinforcing as required for clearance.

① 4(H1-12"); (H1-12") Round down to nearest 0.5'

② H1-3"

STANDARD CURB INLET PRECAST TOPS			
W	PRE-CAST TOP SIZE	PIPE SIZE	CU YD. CONC.
4' 4"	3'8"x 6'4" x7 1/2"	21" & SMALLER	0.38 ±
5' 4"	4'8"x 6'4" x7 1/2"	24" & 30"	0.51 ±
6' 4"	5'8"x 6'4" x7 1/2"	36" & 42"	0.64 ±
7' 4"	6'8"x 6'4" x7 1/2"	48" & 54"	0.77 ±
8' 4"	7'8"x 6'4" x7 1/2"	60" & 66"	0.90 ±

BENDING DIAGRAM

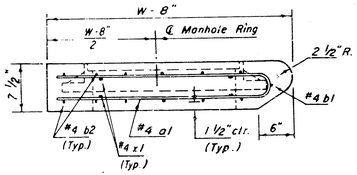

SECTION C-C

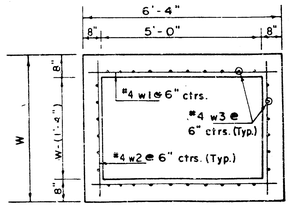

SECTION D-D

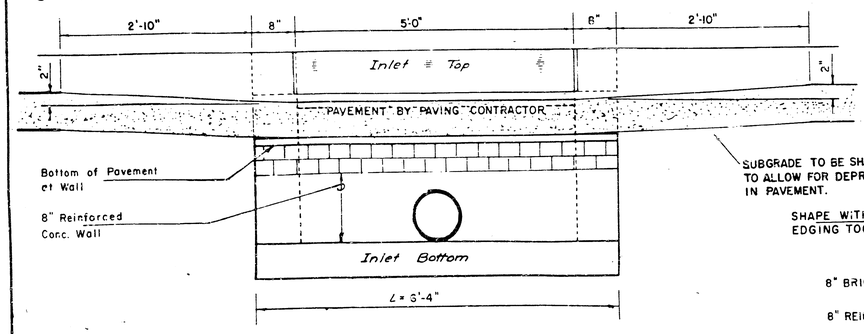

SECTION E - E

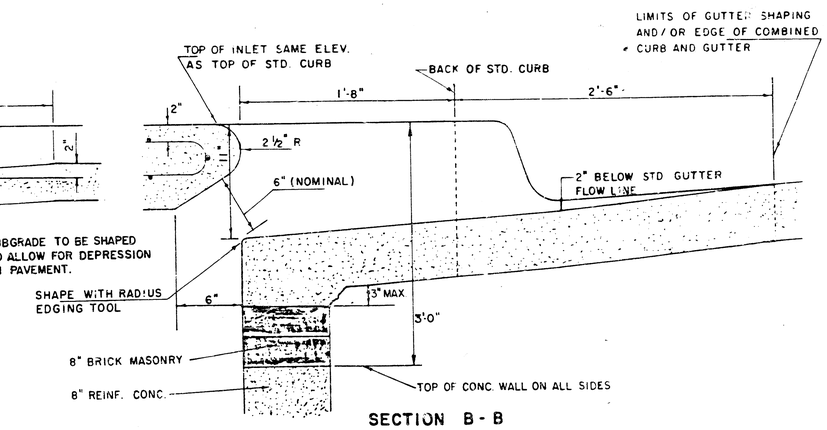

SECTION B - B

~~REVISED 11-30-1988~~

~~REVISED 12-21-1984~~ Revised 2-16-1989

DETAIL STANDARD TYPE IA CURB INLET

CITY OF WICHITA, KANSAS

INLET OPENING = 6" x 5'0"

ℓ = 6'-4"

JUNE 1984

~~Proj. No. 108-10-613-85379-000-000-001~~

PROJECT NO.	YEAR	SHEET NO.
	1954	56

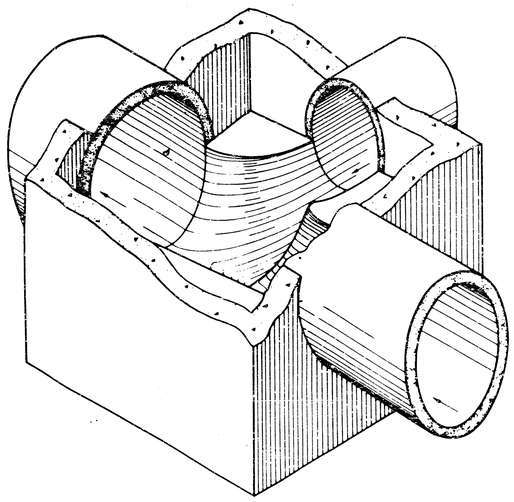

SECTIONAL VIEW (EXAMPLE IV)

Showing Floor Shaping

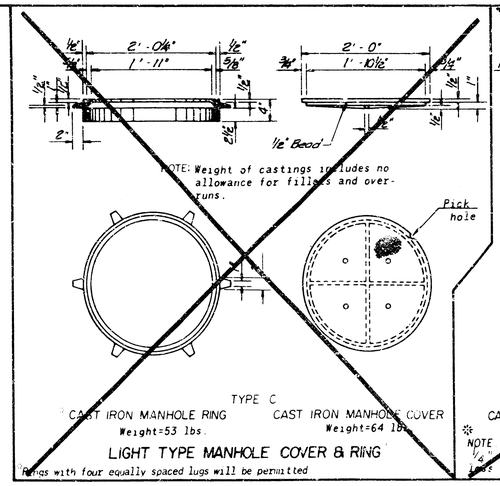

Rings with four equally spaced lugs will be permitted

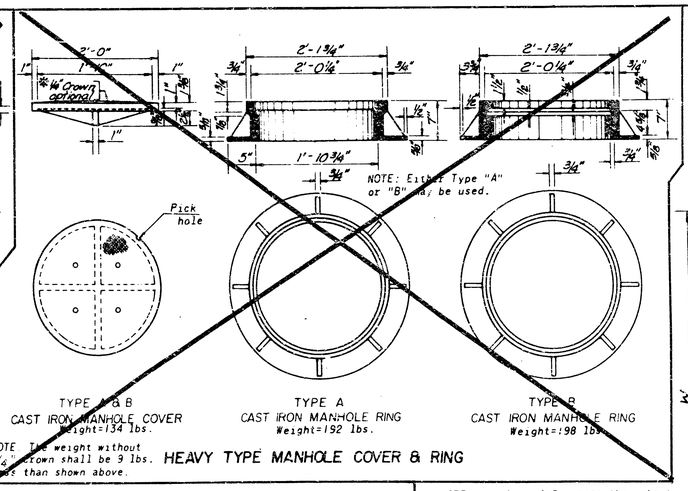

* NOTE The weight without crown shall be 9 lbs. less than shown above.

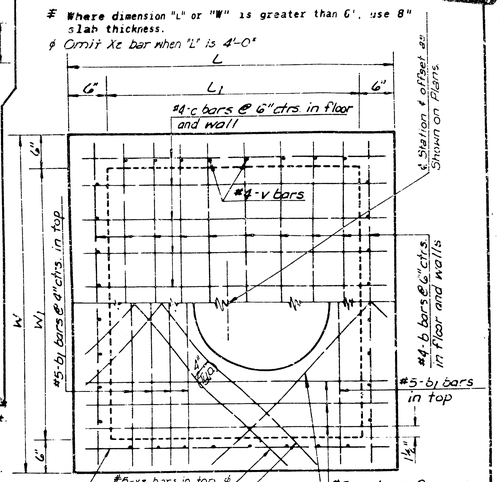

TYPICAL EXAMPLES OF VARIOUS PIPE COMBINATIONS

Showing method of shaping floor of manholes to provide increased hydraulic efficiency.
For reinforcing & other features see "PLAN" and "SECTION"

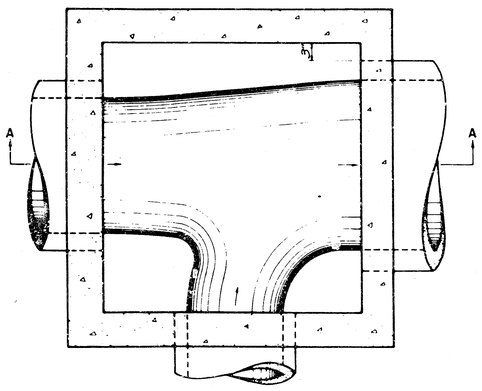

FLOOR PLAN (EXAMPLE IV)

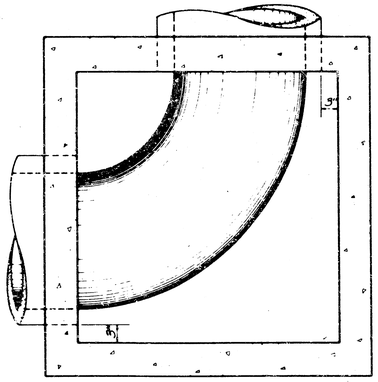

FLOOR PLAN (EXAMPLE II)

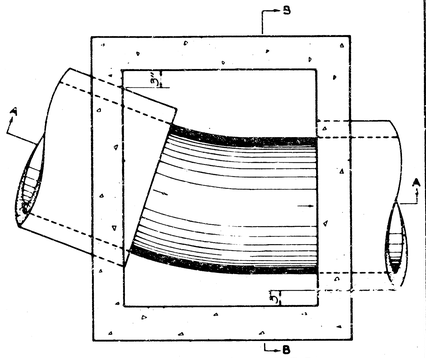

FLOOR PLAN (EXAMPLE I)

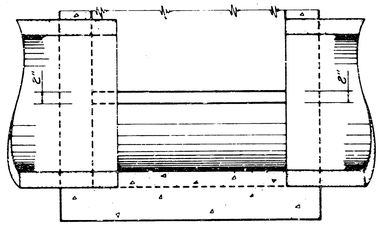

SECTION A-A (EXAMPLE I)

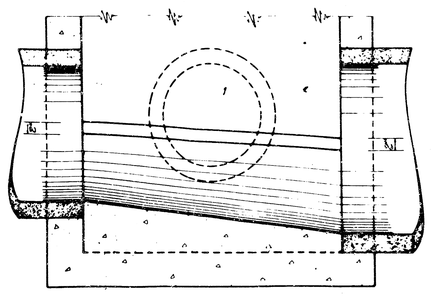

SECTION A-A (EXAMPLE IV)

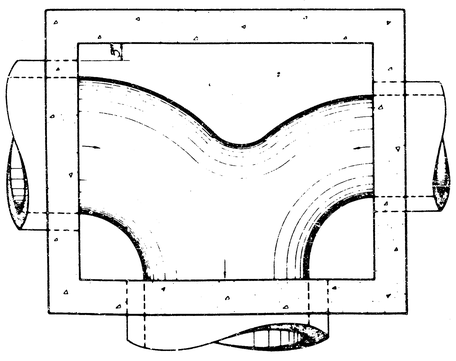

FLOOR PLAN (EXAMPLE III)

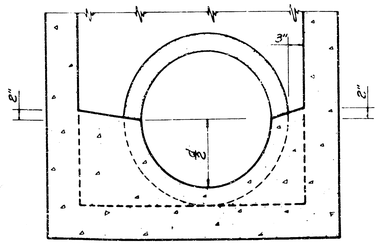

SECTION B-B (EXAMPLE I)

NOTE: ~~Use a Class A Concrete throughout.~~ All exposed edges shall be finished with an edging tool.

~~At the contractors option Class~~ ~~A~~ Concrete ~~(AE)~~ ~~or~~ mix used in Conc. Pvt. may be used throughout.

In general, pipes will enter and leave the manhole at various positions. Where possible bend bars around pipes.

Floor of manhole to be shaped as shown in various "EXAMPLES" with unreinforced ~~Class "A"~~ concrete.

Manhole opening and steps, where used, shall be placed to afford easy access to top of shaped invert. Top reinforcing bars to be adjusted accordingly.

All castings shall be gray iron and shall comply with the Standard Specifications.

All exposed cast iron surfaces (rings & covers) not subjected to traffic, shall be painted either in the shop or in the field with one coat of a zinc dust paint, followed by two field coats of aluminum paint.

No deductions in concrete quantities shall be made for pipe openings.

No additions in concrete quantities shall be made for shaping floor of Manholes.

When so ordered by the Engineer, the top of the manhole shall be sloped slightly to approximately fit the ground line or other conditions.

Dimensions and weights of cast iron as shown on this sheet are minimum. Larger dimensions and/or heavier weights of cast iron may be used.

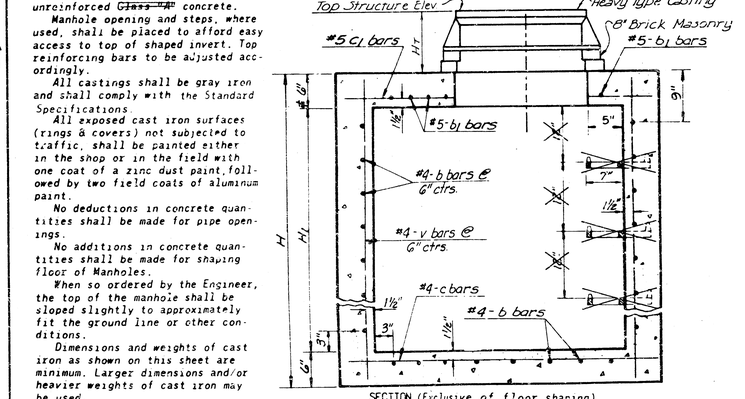

As an alternate to the cast iron step shown, either an aluminum or a plastic coated steel step complying with the same minimum clear opening dimensions may be used. The minimum length of rung shall be 14 inches and the minimum distance of rung from wall shall be 6 inches.

The solid aluminum extruded bar (½" minimum) shall comply with the Standard Specifications (ASTM-B-221, Alloy 6005-T5).

The plastic coated step shall be made from a No. 3 steel reinforcing bar encapsulated in plastic to provide a minimum cross section of 1 inch by 1 inch and shall comply with the special provision. The rung shall be designed so the foot cannot slide off the end.

Note: Steps shall not be installed in inlets or manholes on this Project.

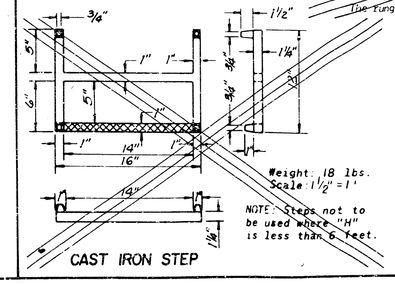

NO	DATE	REVISIONS	BY	APP'D
26	9-28-82	Rev step from 16" to 14" clear opening	W.L.H.	L.R.P.
25	8-19-80	Revised to Standard Specs.	W.L.H.	L.R.P.
24	4-2-80	Labeled bars same as Steel table	W.L.H.	L.R.P.

KANSAS DEPARTMENT OF TRANSPORTATION

REINFORCED CONCRETE MANHOLE

~~STD NO. 633~~ 4-5

SHEET NO. OF	SCALE 1"=1'	APP'D L. R. Vincent	
DESIGNED LRP	DETAILED WAB	QUANTITIES	TRACED WAB
DESIGN CK ALB	DETAIL CK. ALB	QUAN. CK	TRACE CK ALB

SG-6

MANHOLE FRAME AND COVER DETAIL

ADOPTED AS STANDARD DESIGN

BY

City of Wichita, Kansas

MANHOLE COVER

Weight: 180 Lbs.

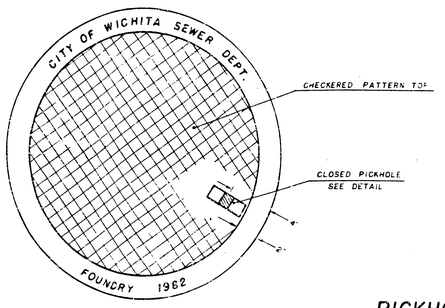

TOP VIEW

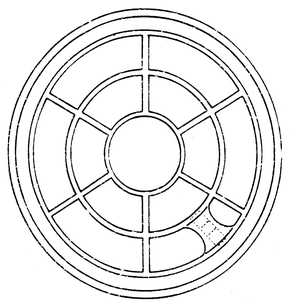

BOTTOM VIEW

PICKHOLE DETAIL

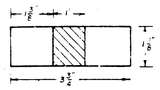

TOP VIEW

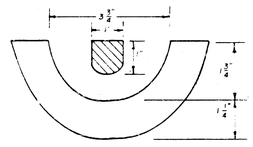

SECTION VIEW

MANHOLE FRAME

Weight: 240 Lbs.

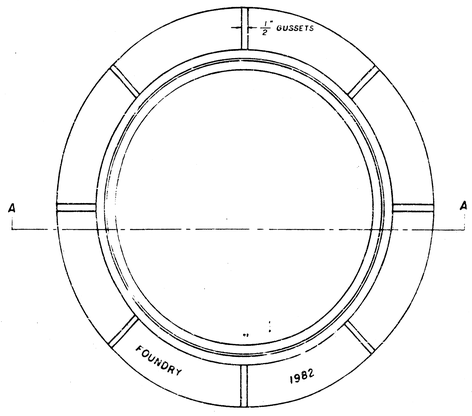

TOP VIEW

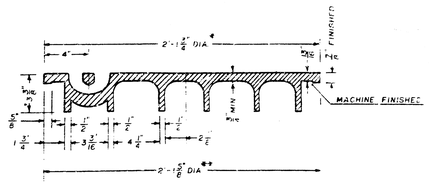

SECTION VIEW

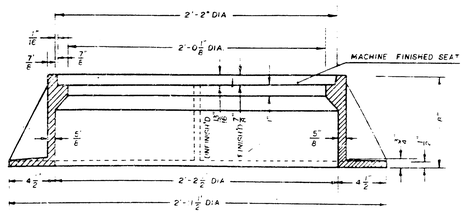

SECTION A-A

* OUTSIDE DIA TOP OF COVER

** OUTSIDE DIA BOTTOM OF COVER

GENERAL NOTES

1. MANHOLE CASTINGS SHALL BE MANUFACTURED USING GOOD QUALITY GRAY IRON CONFORMING TO CLASS 30 OF A.S.T.M. DESIGNATION A-48. DIMENSIONS AND WEIGHTS SHOWN ON THE DETAILED DRAWINGS SHALL BE CONSIDERED AS MINIMUM REQUIREMENTS AND ANY DEVIATIONS FROM THE DIMENSIONS SHOWN MUST BE SPECIFICALLY APPROVED. THE FINISHED CASTINGS SHALL BE OF UNIFORM QUALITY, FREE FROM BLOWHOLES, POROSITY, HARD SPOTS, SHRINKAGE DISTORTIONS OR OTHER DEFECTS.

2. MANHOLE CASTINGS SHALL BE MANUFACTURED SUCH THAT A COVER MANUFACTURED BY ANY ONE FOUNDRY WILL FIT INTERCHANGEABLY INTO A FRAME MANUFACTURED BY ANOTHER FOUNDRY AND STILL MEET ALLOWABLE CLEARANCES AND NON-ROCKING REQUIREMENTS. THIS WILL REQUIRE MANUFACTURING OF THE MATCHING FACES ON THE COVER AND THE FRAME TO CLOSE TOLERANCES.

3. THE OUTSIDE CIRCUMFERENCE OF THE VERTICAL FACE OF THE COVER AND THE INSIDE CIRCUMFERENCE OF THE VERTICAL FACE IN THE FRAME RECESS SHALL BE MANUFACTURED TO TOLERANCES SUCH THAT THE CLEARANCE BETWEEN THE COVER AND FRAME WILL NOT EXCEED 1/8" AT ANY POINT AROUND THE CIRCUMFERENCE OF THE COVER. THE SEATING SURFACE BETWEEN THE COVER AND FRAME SHALL BE MACHINED SUCH THAT THESE SURFACES SHALL MAKE FULL CONTACT FOR THEIR FULL CIRCUMFERENCE TO PRECLUDE THE COVER FROM ROCKING IN THE FRAME.

4. THE MANHOLE FRAME AND COVER SHALL BE MARKED WITH LETTERING INDICATING THE NAME OF THE MANUFACTURER AND THE YEAR WHEN THE COVER OR FRAME WAS CAST. THE COVER SHALL BE FURTHER IDENTIFIED WITH REGARDS TO OWNERSHIP USING LETTERS AT LEAST 1" IN HEIGHT. THIS IDENTIFICATION SHALL BE "CITY OF WICHITA SEWER DEPARTMENT". THE WORD DEPARTMENT MAY BE ABBREVIATED. THE TEXTURE OF THE TOP SURFACE OF THE COVER SHALL BE MANUFACTURED IN A CHECKERED PATTERN DESIGN AS INDICATED ON THE DRAWINGS. SMOOTH BLOCKOUTS SHALL BE UTILIZED TO HIGHLIGHT THE LETTERING ON THE COVER SURFACE. THE TOTAL AREA OF SMOOTH SURFACE BLOCKOUT SHALL NOT EXCEED THE AREA AS INDICATED ON THE DRAWING. POSITIONING OF SMOOTH BLOCKOUTS AND LETTERING MAY VARY FROM THAT SHOWN ON THE DETAILED DRAWING.

JH DEC. 1981

REVISED MAY 1993

~~Proj. No. 1103-R-CUS-82307-000-0000~~

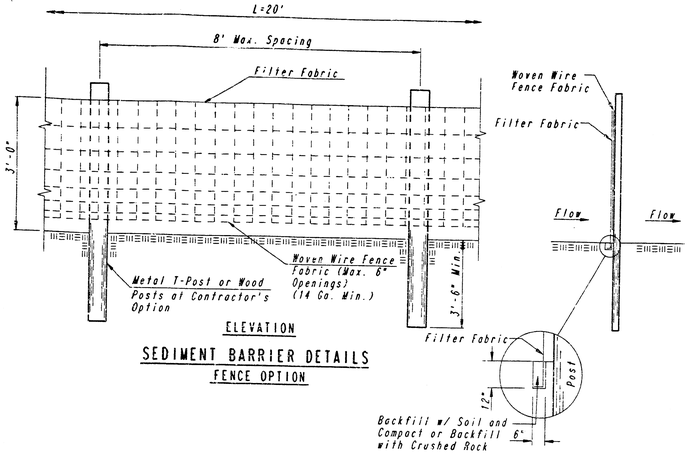

ELEVATION

SEDIMENT BARRIER DETAILS
FENCE OPTION

ANCHOR TRENCH DETAIL

GENERAL NOTES

1. TOPSOIL STRIPPED ON SITE TO BE UTILIZED IN LANDSCAPING. EXCESS TOPSOIL, IF ANY, TO BE STOCKPILED ON A SITE TO BE APPROVED BY THE OWNER ON LOT 1, BLOCK 1, LAKESIDE PARK ADDITION.
2. SEDIMENT BARRIERS SHALL BE INSTALLED AT LOCATIONS SHOWN ON THE PLANS.
3. SEDIMENT BARRIERS SHALL BE ERECTED PRIOR TO THE COMMENCEMENT OF EARTHWORK OPERATIONS IN A GIVEN BASIN. REMOVAL AND DISPOSAL OF ACCUMULATED SILT AND DEBRIS AND/OR REMOVAL AND RECONSTRUCTION OF SEDIMENT BARRIERS WILL BE PERFORMED THROUGHOUT THE PROJECT LIFE WHEN DEBRIS REACHES ONE-THIRD THE FENCE HEIGHT OR AS DEEMED NECESSARY BY THE ENGINEER. SEDIMENT BARRIERS AND ACCUMULATED DEBRIS SHALL BE REMOVED AND DISPOSED OF BY THE CONTRACTOR AFTER TURF COVER HAS BEEN ESTABLISHED, UNLESS OTHER ARRANGEMENTS HAVE BEEN AGREED TO.
4. FILTER FABRIC FOR FENCE OPTION SEDIMENT BARRIERS SHALL BE RESISTANT TO ULTRAVIOLET LIGHT. MATERIALS MAY BE SUPPLIED BY THE FOLLOWING MANUFACTURERS:

MIRAFI, INC.	-	100X
HOECHST FIBERS INDUSTRIES	-	TREVIRA 1115
EXXON	-	TYPAR 3301 W

MATERIALS SUPPLIED BY THE ABOVE NAMED MANUFACTURERS SHALL BE ACCEPTED UPON VISUAL INSPECTION BY THE ENGINEER. OTHER COMPARABLE MATERIALS MAY BE USED IF APPROVED BY THE ENGINEER.

FILTER FABRIC SHALL BE ATTACHED TO FENCE FABRIC BY MEANS OF TIE WIRES OR HOG RINGS PRIOR TO ATTACHMENT OF FENCE/FABRIC COMBINATION ONTO THE POSTS.

5. BALES USED MAY BE EITHER HAY OR STRAW, PROVIDED THEY ARE SOUND AND INTACT.
6. INLET PROTECTION METHOD MAY BE ANY OF THE APPLICABLE TYPES SHOWN, AT THE CONTRACTORS OPTION.
7. GRAVEL FILTER SHALL BE A DURABLE, WELL-GRADED SAND-GRAVEL OR CRUSHED STONE, WAXIMUM 3-1/2 IN. SIZE. AS AN ALTERNATE GRAVEL FILLED BAGS OF BURLAP OR OTHER FABRIC MAY BE USED. WHERE BAGS ARE USED, THE WIRE SCREEN, WHERE SHOWN, MAY BE OMITTED.
8. INLET PROTECTION SHALL BE ERECTED AS SOON AS THE STRUCTURE HAS BEEN BACKFILLED. MEASURES SHALL BE TAKEN TO PRECLUDE ENTRY OF SEDIMENT INTO THE STORM WATER SEWER SYSTEM DURING CONSTRUCTION OF THE STRUCTURE.
9. REMOVAL AND DISPOSAL OF ACCUMULATED SILT AND DEBRIS AND/OR REMOVAL AND RECONSTRUCTION OF INLET PROTECTION INSTALLATIONS SHALL BE PERFORMED THROUGHOUT THE PROJECT LIFE WHENEVER DEBRIS REACHES ONE-THIRD THE BARRIER HEIGHT, OR AS DEEMED NECESSARY BY THE ENGINEER. ULTIMATE REMOVAL AND DISPOSAL OF INLET PROTECTION AND DEBRIS WILL BE PERFORMED AFTER SEEDING IS ESTABLISHED, UNLESS OTHER ARRANGEMENTS HAVE BEEN MADE.

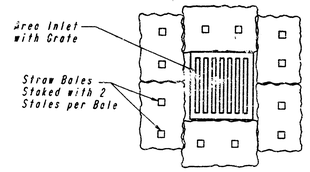

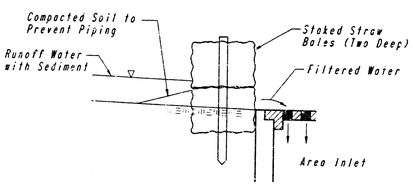

AREA INLET PROTECTION
STRAW BALES

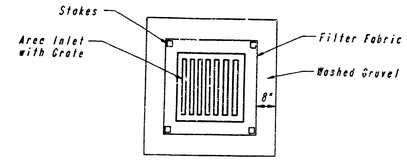

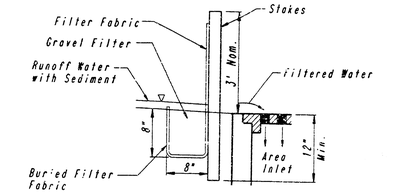

AREA INLET PROTECTION
FILTER FABRIC

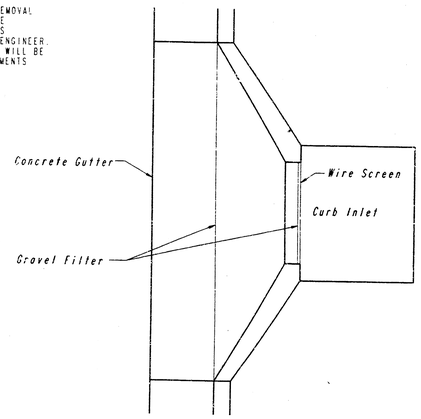

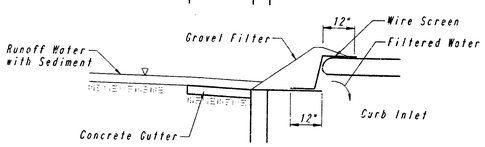

CURB INLET PROTECTION
GRAVEL AND WIRE MESH FILTER

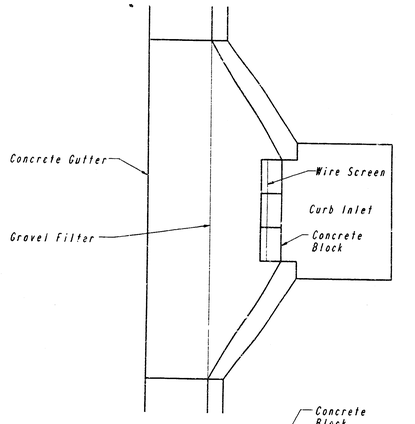

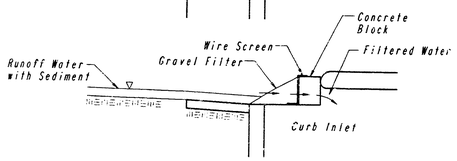

CURB INLET PROTECTION
BLOCK AND GRAVEL FILTER

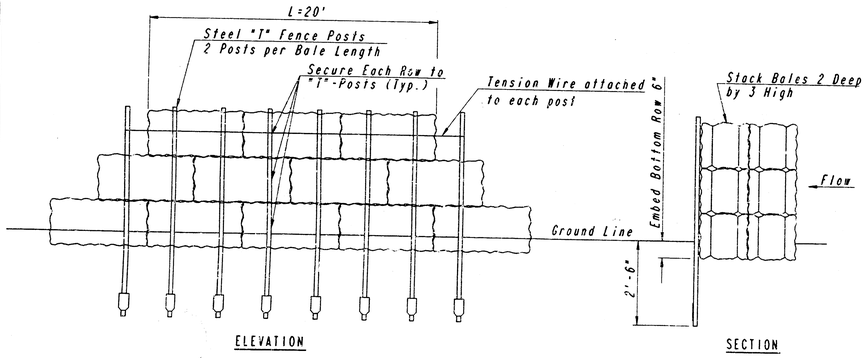

ELEVATION SECTION

SEDIMENT BARRIER DETAILS
HAY/STRAW BALE OPTION

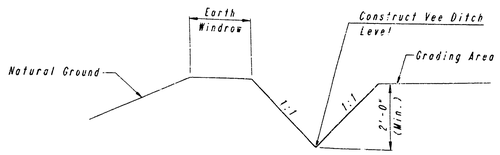

TEMPORARY INTERCEPT DITCH DETAIL

WHERE TEMPORARY EROSION CONTROL INTERCEPT DITCHES ARE USED, ALL AREAS WHERE FLOW IS CONCENTRATED SHALL BE PROTECTED BY SEDIMENT BARRIERS PRIOR TO DISCHARGING INTO ANY DITCH, STORM SEWER, OR WATERCOURSE.

EROSION CONTROL DETAILS ADAPTED FROM: VIRGINIA SOIL AND WATER CONSERVATION COMMISSION, 1985 AND DRAINAGE CRITERIA MANUAL, DENVER URBAN DRAINAGE AND FLOOD CONTROL DISTRICT 9-1-92.

GRADING AND EROSION CONTROL DETAILS

RITCHIE CORPORATE OFFICE

PROFESSIONAL ENGINEERING CONSULTANTS, P
ENGINEERS
WICHITA, KANSAS

10-10-3

Designed by	DRC	Checked by	
Drawn by	DEP	Date MAY, 1994	Job No. 93

PLAN: SURVEYED, NOTE BOOK, PLOTTED, NO., ALIGNMENT CHECKED, RT. OF WAY CHECKED, DATE

DRAWING, CONSTRUCTION, ROTATE, DATE, DAR