Benchmarks

City Disc 99' S & 64' E of the centerlines of both Maize Road and 21st St. N.
Elev = 164.30 City Datum

"□" cut top of curb near S.E. corner of Lot 4, Pearson Farms 3rd Addition
Elev = 166.04 City Datum

APPROVED AS NOTED BY CITY ENGINEER OF WICHITA

Sanitary Sewers _____
Storm Sewers VRH 6/24/94
Driveway Approaches _____
Water Mains _____
Paving _____

NOTE TO CONTRACTORS

Inspection and testing for this project is to be provided by a Licensed Consulting Engineering Firm under contract with the Owner/Developer. Said Inspection to be in accordance with the City of Wichita standard construction engineering practices and certified by a Licensed Professional Engineer. No work shall be performed in dedicated easements or public right-of-way by the Contractor without such inspection nor shall any work be commenced without written authorization by the City Engineer. All Construction and Materials shall comply with the City of Wichita Specifications and Standards (on file and available in the City Engineer's Office).

DRAINAGE DATA
LOT 4, PEARSON FARMS 3RD ADD.

DA = 2.7 Acres
C = 0.8
Q5 = 9.8 cfs
Q100 = 15.8 cfs

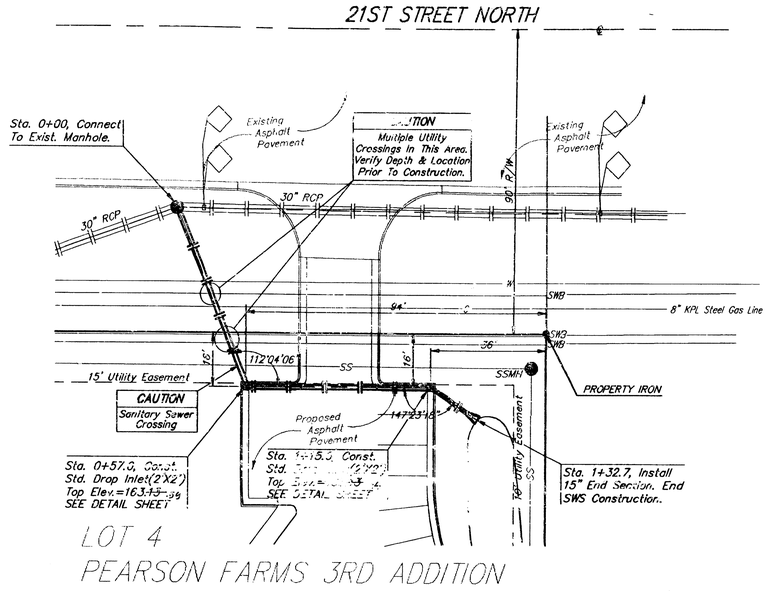

Scale: 1" = 20' Horizontal
1" = 5' Vertical
● = Iron

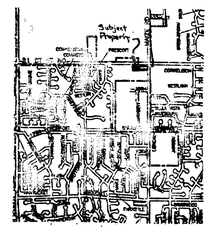

Location Map

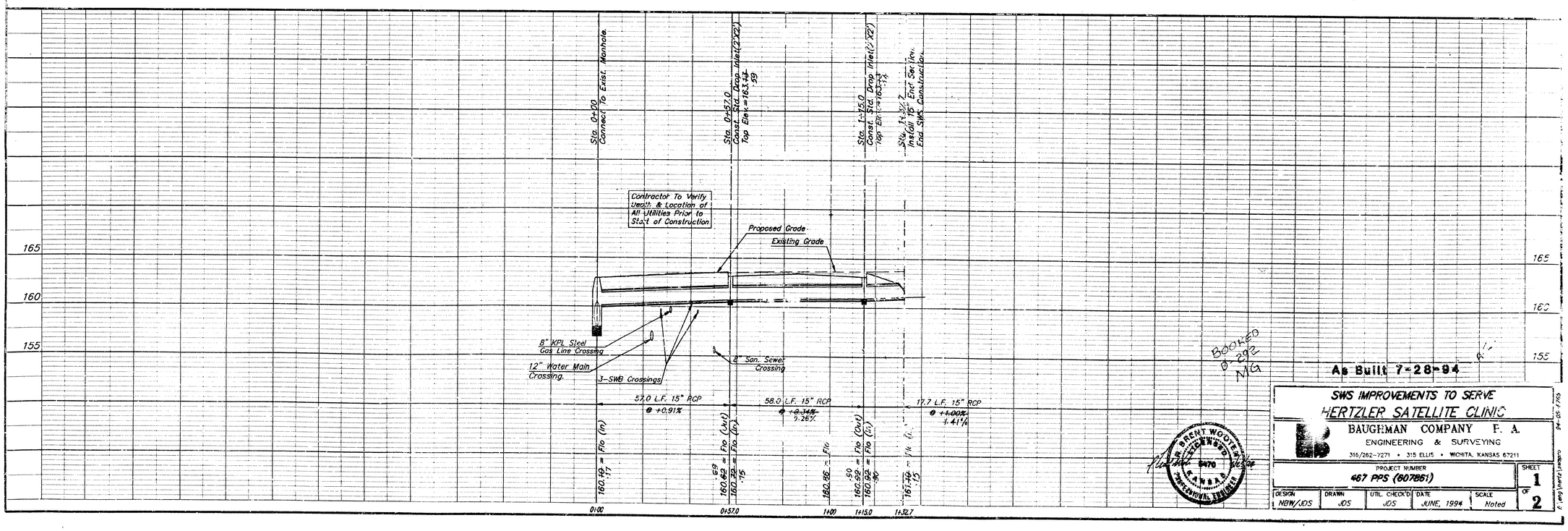

BOOKED 8-2-94 MG

As Built 7-28-94

SWS IMPROVEMENTS TO SERVE HERTZLER SATELLITE CLINIC

BAUGHMAN COMPANY P. A.
ENGINEERING & SURVEYING
316/262-7271 • 315 ELLIS • WICHITA, KANSAS 67211

PROJECT NUMBER 467 PPS (8078B1)

DESIGN	DRAWN	UTIL. CHECK'D	DATE	SCALE	SHEET
MBW/JDS	JDS	JDS	JUNE, 1994	Noted	1 OF 2

94-05-1750
K:\eng\Vertz\Landscp

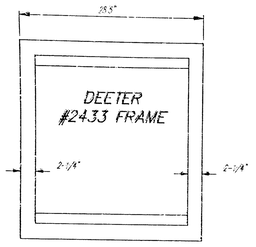

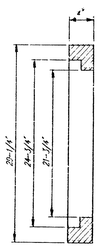

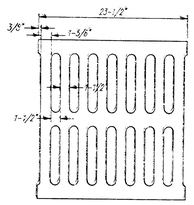

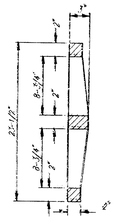

DEETER #2433 GRATE

NOTE: Grates shall be imprinted on the top surface with "CITY OF WICHITA" using letters at least 1" in height. Other marking methods may be approved by the engineer.

24" x 24" Frame and Grate Detail

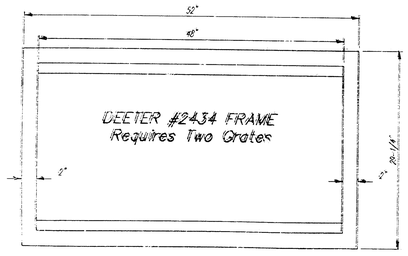



Double 24" x 24" Frame Detail

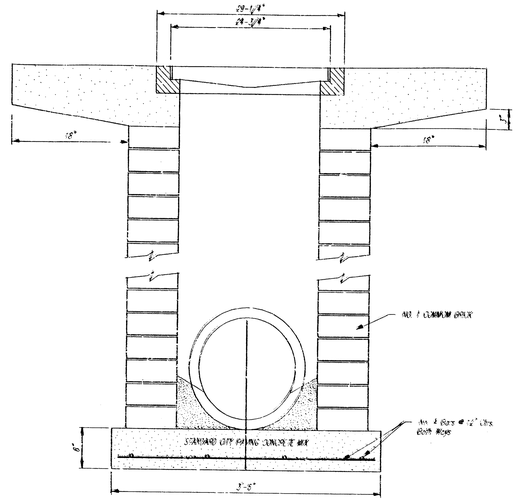

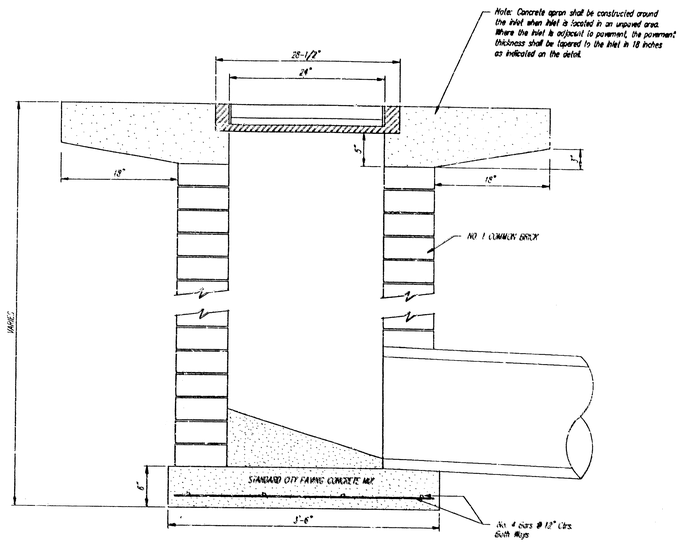

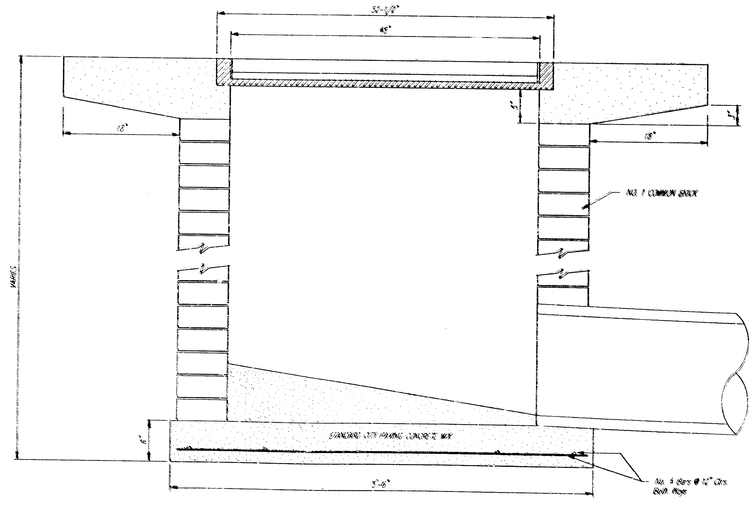

DROP INLET DETAILS
M.E. Lindebak, City Engineer
City of Wichita, Kansas

Project Number	2
467 PPS (607861)	2

18-5-4-8