BENCH MARK:

CITY OF WICHITA DISC IN NE CORNER OF CONCRETE BASE OF SIGNAL POLE. SW CORNER 47TH STREET AND BROADWAY.
ELEVATION = 87.44 CITY DATUM

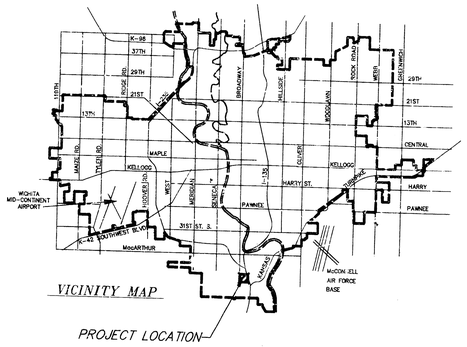

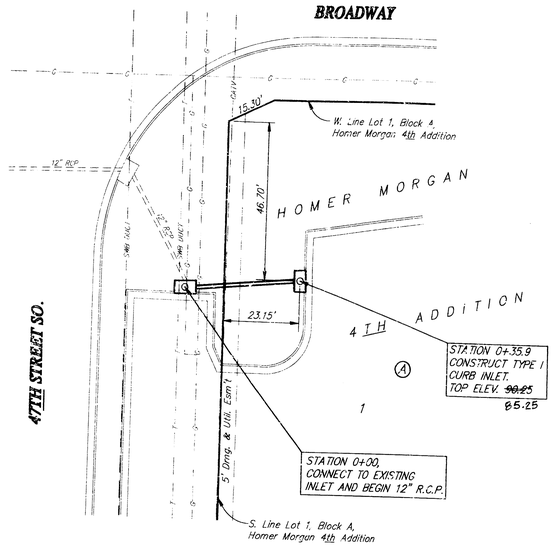

SCALE:
1"=20' PLAN
1"=5' PROFILE

APPROVED AS NOTED
BY CITY ENGINEER OF WICHITA

Sanitary Sewers _____
Storm Sewers VRH 6/13/94
Driveway Approaches _____
Water Mains _____
Paving _____

SPECIAL NOTE

This plan is as-built. Construction was complete at time of plan preparation JCR

THOMAS CHARLES RUGGLES
LICENSED
9621
6-10-94
KANSAS
PROFESSIONAL ENGINEER

RUNOFF (BY RATIONAL METHOD):

A = 1.5 cc	T_c = 15 minutes
C_5 = 0.90	C_{100} = 0.97
I_5 = 4.56"/hr.	I_{100} = 7.37"/hr.
Q_5 = 6.2 cfs	Q_{100} = 10.7 cfs

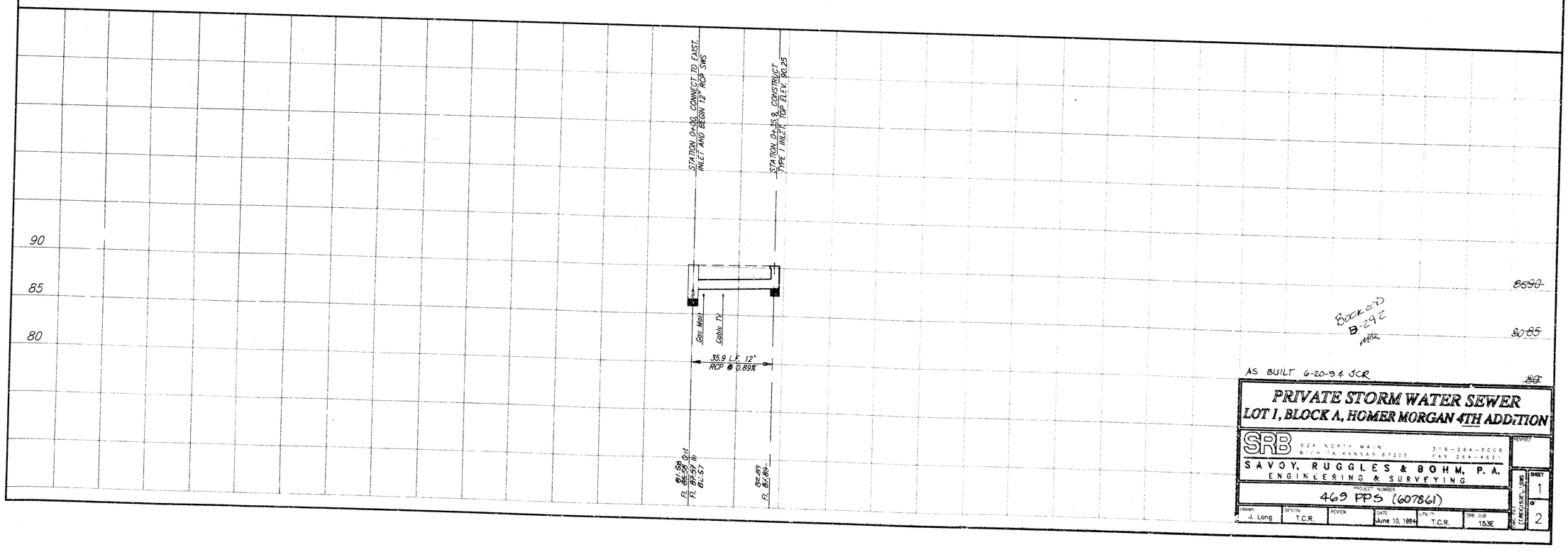

BOOKED B-292

AS BUILT 6-20-94 JCR

PRIVATE STORM WATER SEWER
LOT 1, BLOCK A, HOMER MORGAN 4TH ADDITION

SRB 924 NORTH MAIN WICHITA KANSAS 67203 316-264-8008 FAX 264-4621

SAVOY, RUGGLES & BOHM, P.A.
ENGINEERING & SURVEYING

PROJECT NUMBER: 469 PPS (607861)

DRAWN	DESIGN	REVIEW	DATE	UTILITY	SRB JOB
J. Lang	T.C.R.		June 10, 1994	T.C.R.	153E

REVISED

SHEET 1 OF 2

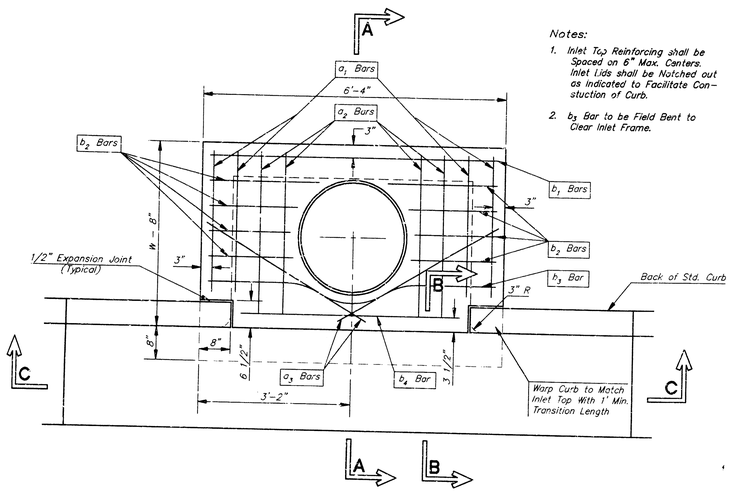

PLAN

Notes:

1. Inlet Top Reinforcing shall be Spaced on 6" Max. Centers. Inlet Lids shall be Notched out as Indicated to Facilitate Construction of Curb.
2. b_3 Bar to be Field Bent to Clear Inlet Frame.

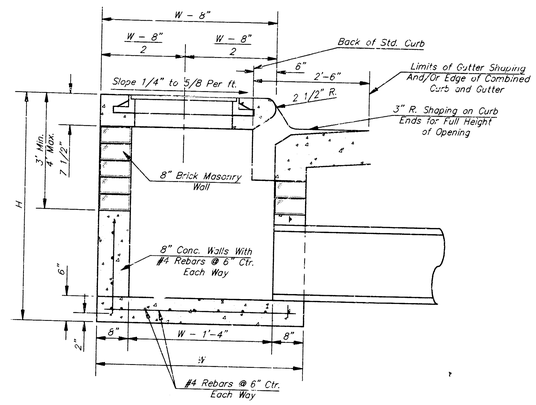

SECTION A--A

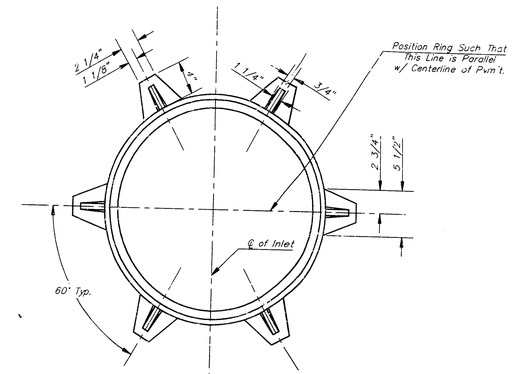

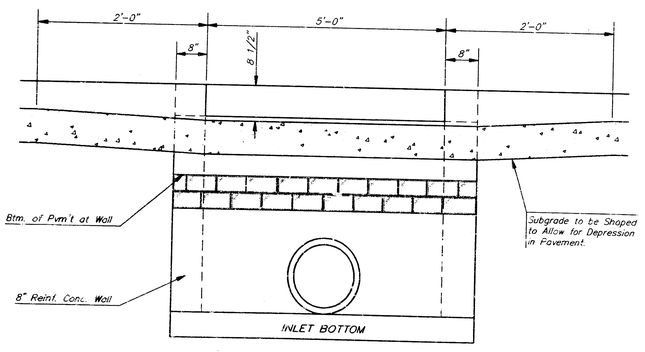

SECTION C-C

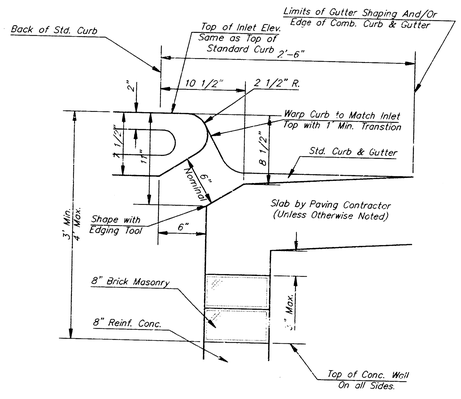

SECTION B-B

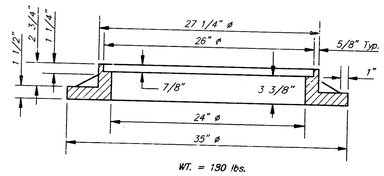

WT. = 190 lbs.

MANHOLE RING AND COVER

*See City of Wichita Standard Manhole Ring and Cover Detail Sheet for Cover Details to Be Used With Inlet Frame.

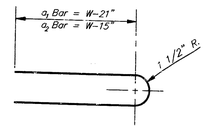

BENDING DIAGRAM

STEEL SCHEDULE

BAR		a_1	a_2	a_3	b_1 W=4'-4"	b_1 W=5'-4"	b_1 W=6'-4"	b_1 W=7'-4"	b_1 W=8'-4"	b_2	b_3	b_4	Wt. Lbs.
NUMBER		4	4	2	1	3	5	7	9	6	1	1	
SIZE		#4	#4	#4	#4	#4	#4	#4	#4	#4	#4	#6	
LENGTH	W=4'-4"	5'-7"	6'-7"	4'-0"	6'-1"	–	–	–	–	1'-9"	6'-2"	4'-8"	60±
	W=5'-4"	7'-7"	8'-7"	5'-0"	–	6'-1"	–	–	–	1'-9"	6'-2"	4'-8"	81±
	W=6'-4"	9'-7"	10'-7"	6'-0"	–	–	6'-1"	–	–	1'-9"	6'-2"	4'-8"	101±
	W=7'-4"	11'-7"	12'-7"	7'-0"	–	–	–	6'-1"	–	1'-9"	6'-2"	4'-8"	121±
	W=8'-4"	13'-7"	14'-7"	8'-0"	–	–	–	–	6'-1"	1'-9"	6'-2"	4'-8"	141±

Note: a_3 Bars to be Placed Approx. 2" Below Top of Inlet Cover.

STANDARD CURB INLET PRECAST TOPS			
W	PRE-CAST TOP SIZE	PIPE SIZE	CU. YD. CONC.
4'-4"	3'-8" 6'-4" 7 1/2"	21" & SMALLER	0.25±
5'-4"	4'-8" 6'-4" 7 1/2"	24" & 30"	0.51±
6'-4"	5'-8" 6'-4" 7 1/2"	36" & 42"	0.64±
7'-4"	6'-8" 6'-4" 7 1/2"	48" & 54"	0.77±
8'-4"	7'-8" 6'-4" 7 1/2"	60" & 66"	0.90±

GENERAL NOTES

1. Concrete tops to be installed on thin mortar cushion to insure full support along brick walls. Concrete tops may be cast in place or precast. Concrete used for inlet construction shall be concrete pavement mix.
2. Contractor shall have the option of constructing 8" brick masonry walls between the concrete inlet base and top on this inlet when W=6'-4" and H=7'-0" or less.
3. Inlet invert shall be shaped with 8 sack sand mix concrete to create flow channels and to increase hydraulic efficiency such that the inlet will be self cleaning between all inlet and/or outlet pipes.
4. The ends of all pipes installed in inlets shall be cut off flush with the inside face of the inlet wall.

STANDARD TYPE 1 INLET DETAILS
CITY OF WICHITA, KANSAS

SRB
924 NORTH MAIN
WICHITA, KANSAS 67203
316-264-8008
FAX 264-4621
SAVOY, RUGGLES & BOHM, P.A.
ENGINEERING & SURVEYING

REVISED

PROJECT NUMBER
469 PPS (6078G1)

DRAWN	DESIGN	REVIEW	DATE	UTILITY	SRB JOB
			June 10, 1994		153E

SHEET TITLE \DRAWINGS\STDTP1-S

2

2