# PRIVATE
# CONSTRUCTION PLANS FOR
# STORM WATER SEWER IMPROVEMENTS
# TO SERVE
# LOT 1 BLOCK 1, GEORGE WASHINGTON STORAGE ADDITION

## PROJECT NO. 519PPS (607861)

APPROVED AS NOTED
BY CITY ENGINEER OF WICHITA

SANITARY SEWERS_____

STORM SEWERS VRH 12/16/94

DRIVEWAY APPROACHES_____

WATER MAINS_____

PAVING_____

NOTE TO CONTRACTOR

INSPECTION AND TESTING FOR THIS PROJECT IS TO BE PROVIDED BY A LICENSED CONSULTING ENGINEERING FIRM UNDER CONTRACT WITH THE OWNER/DEVELOPER. SAID INSPECTION TO BE IN ACCORDANCE WITH THE CITY OF WICHITA STANDARD CONSTRUCTION ENGINEERING PRACTICES AND CERTIFIED BY A LICENSED PROFESSIONAL ENGINEER. NO WORK SHALL BE PERFORMED IN DEDICATED EASEMENTS OR THE PUBLIC RIGHT-OF-WAY BY THE CONTRACTOR WITHOUT SUCH INSPECTION NOR SHALL ANY WORK BE COMMENCED IN DEDICATED EASEMENTS OR PUBLIC RIGHT-OF-WAY WITHOUT WRITTEN AUTHORIZATION BY THE CITY ENGINEER.

## GENERAL NOTES

1. THE CONTRACTOR SHALL BE RESPONSIBLE FOR PRESERVING PROPERTY PINS. THE CONTRACTOR SHALL BE REQUIRED TO RE-ESTABLISH ANY PROPERTY PINS WHICH ARE DAMAGED OR DESTROYED BY THE CONSTRUCTION OPERATION. SUCH PINS SHALL BE RE-ESTABLISHED BY A LICENSED LAND SURVEYOR IN ACCORDANCE WITH STATE LAWS.

2. ALL ELEVATIONS SHOWN ON THESE PLANS ARE ON CITY OF WICHITA DATUM. WICHITA DATUM = N.G.V.D. - 1187.4

3. UNDERGROUND UTILITY SERVICE LINES AND OVERHEAD UTILITY POLES AND LINES ARE TO BE ADJUSTED AS NECESSARY BY OTHERS PRIOR TO CONSTRUCTION, UNLESS THE PLANS SPECIFICALLY IDENTIFY A UTILITY TO BE ADJUSTED BY ITS OWNER DURING CONSTRUCTION. EXISTING UTILITY LOCATIONS, AS SHOWN ON THESE PLANS, REPRESENT THE BEST INFORMATION OBTAINABLE FOR DESIGN. LOCATION INFORMATION HAS BEEN OBTAINED FROM THE VARIOUS UTILITY COMPANIES, AND IS EITHER FROM CITY PLANS, COMPANY RECORDS, DRAWINGS, OR COMPANY PROVIDED FIELD LOCATIONS. THE CONTRACTOR WILL BE REQUIRED TO WORK AROUND EXISTING UTILITIES WHICH DO NOT CONFLICT WITH PROPOSED CONSTRUCTION. IF ADDITIONAL UTILITY LINES ARE ENCOUNTERED DURING CONSTRUCTION, THEIR OWNERS SHOULD BE IMMEDIATELY ADVISED, SO THAT NECESSARY ADJUSTMENTS OR RELOCATIONS CAN BE MADE. THE CONTRACTOR SHALL LOCATE ALL UTILITY LINES PRIOR TO EXCAVATION.

4. THE CONTRACTOR SHALL PROVIDE A MINIMUM ADVANCED NOTICE OF FORTY-EIGHT (48 HOURS) TO ALL THE FOLLOWING COMPANIES PRIOR TO EXCAVATION:

| | |
|---|---|
| KANSAS ONE CALL | 1-800-344-7233 OR 687-2470 (WICHITA) |
| KG&E (ELECTRIC) | 264-1411 |
| KG&E (GAS DISTRIBUTION) | 832-5912 |
| MULTIMEDIA CABLEVISION | 262-9681 |
| SOUTHWESTERN BELL TELEPHONE COMPANY | 1-571-2115 (REPAIR) |
| CITY OF WICHITA WATER AND SEWER | 268-4908 |
| CITY OF WICHITA STORM WATER UTILITY | 268-4498 |

5. ALL ADJACENT BUILDINGS, STRUCTURES, PARKING LOTS, DRIVES, STREET PAVEMENTS, AND APPURTENANCES OTHER THAN SHOWN ON THESE PLANS FOR REPLACEMENT SHALL BE PROTECTED FROM DAMAGE DURING CONSTRUCTION. ITEMS DAMAGED BEYOND CONSTRUCTION LIMITS SHALL BE REMOVED AND REPLACED BY THE CONTRACTOR AT NO COST TO THE CITY.

6. TREES AND SHRUBS IN THE CONSTRUCTION AREA WHICH ARE IN DIRECT CONFLICT WITH THE PROPOSED CONSTRUCTION SHALL BE REMOVED BY THE CONTRACTOR. TREES AND SHRUBS DESIGNATED BY THE CITY TO REMAIN SHALL BE SAVED AND PROTECTED FROM DAMAGE.

7. RUBBLE FROM THE REMOVAL OF MISCELLANEOUS STRUCTURES AND EXCESS EXCAVATION WHICH IS TO BE WASTED SHALL BE DISPOSED OF ON SITES TO BE PROVIDED BY THE CONTRACTOR. THESE SITES SHALL BE APPROVED BY THE ENGINEER AS TO SUITABILITY, APPEARANCE AND SITE LOCATION. LOCATIONS THAT, IN THE OPINION OF THE ENGINEER, WILL LEAVE AN UNSIGHTLY APPEARANCE WILL NOT BE APPROVED. ALL DISPOSAL SITES MUST BE APPROVED BY THE KANSAS DEPARTMENT OF HEALTH AND ENVIRONMENT. MATERIAL EITHER STOCKPILED OR DISPOSED OF IN A FLOOD PLAIN WOULD REQUIRE A KANSAS DEPARTMENT OF AGRICULTURE PERMIT. ANY MATERIAL DUMPED IN THE WATERS OF THE UNITED STATES OR WETLANDS IS SUBJECT TO U.S. ARMY, CORPS OF ENGINEERS PERMITTING REGULATIONS. ANY MATERIAL BURIED OR STOCKPILED BEYOND APPROVED CONSTRUCTION LIMITS WOULD REQUIRE ADDITIONAL ARCHAEOLOGICAL INVESTIGATIONS UNLESS BURIED IN A PREVIOUSLY APPROVED BORROW LOCATION.

8. ALL DISTURBED UNPAVED AREA SHALL BE SEEDED & MULCHED.

## BENCHMARKS

BM #1 TOP OF INLET 246.40 FT. NORTH OF SOUTH PROPERTY LINE LOT 1 BLOCK 1 GEORGE WASHINGTON STORAGE ADDITION AND WEST SIDE OF GEORGE WASHINGTON BLVD.
ELEV.=105.48

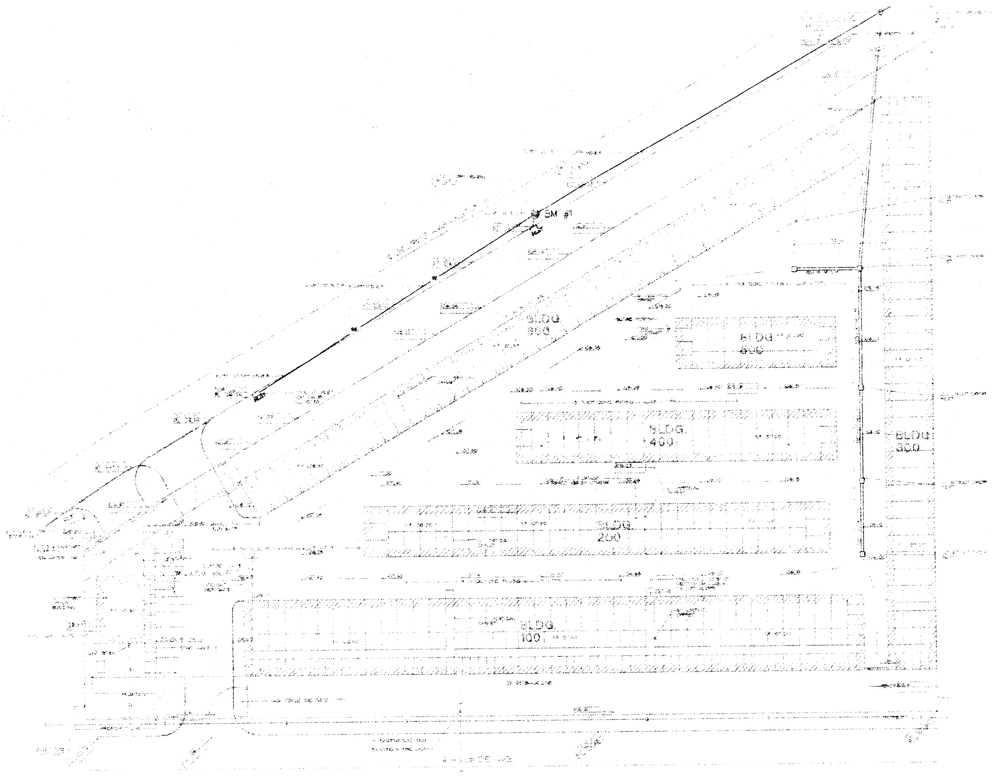


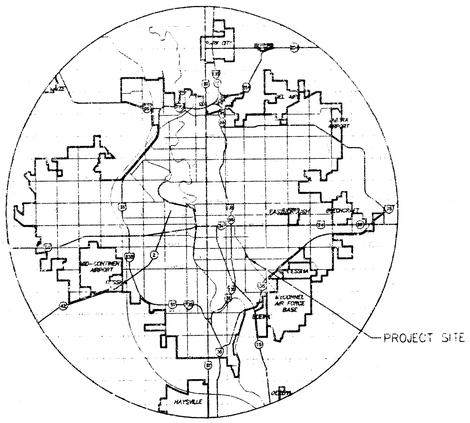


LOCATION MAP

## INDEX TO DRAWINGS


| SHEET NO. | DESCRIPTION |
|---|---|
| 1 | TITLE SHEET |
| 2 | MANHOLE DETAILS |
| 3 | DROP INLET DETAILS |
| 4 | LINE 1 & 2 PLAN & PROFILE |


12/15/94

N
SCALE: 1" = 40'
0 40 80


MID-KANSAS ENGINEERING CONSULTANTS, INC.
411 N. WEBB ROAD
WICHITA, KS. 67206
316-684-9600


GEORGE WASHINGTON STORAGE ADDITION
PROJECT NAME

TITLE SHEET
SHEET TITLE

| G.J.A. | B.D.M. | G.J.A. |
|---|---|---|
| DESIGN BY: | DRAWN BY: | CHECKED BY: |
| 12/15/94 | 94150-DT | 1 / 4 |
| DATE | JOB NO. | SHEET NO. |

# SEWER APPURTENANCES DETAILS

## ADOPTED AS STANDARD DESIGN
## BY
## CITY OF WICHITA

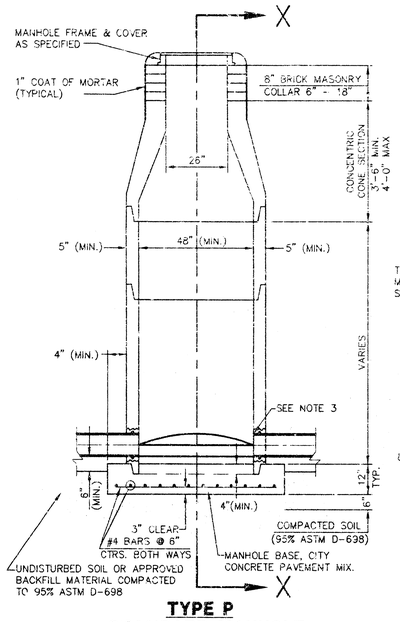


**TYPE P**
**STANDARD MANHOLE**

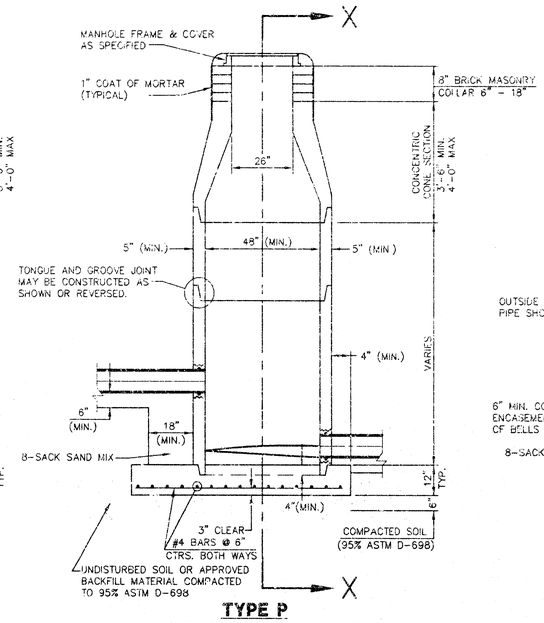


**TYPE P**
**INSIDE DROP MANHOLE**

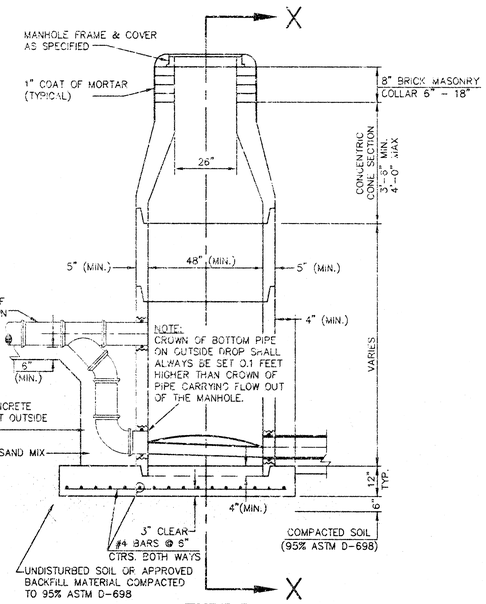


**TYPE P**
**OUTSIDE DROP MANHOLE**

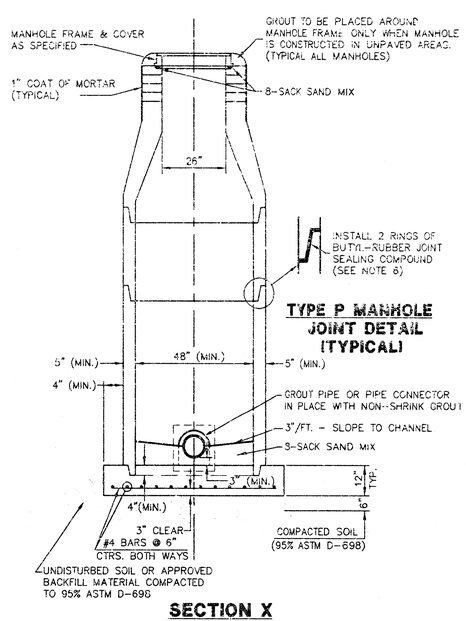


**SECTION X**
**(TYPICAL)**

## GENERAL NOTES - PRECAST MANHOLE NOTES

1. ALL PRECAST CONCRETE MANHOLE SECTIONS SHALL CONFORM TO THE LATEST REVISIONS OF A.S.T.M. C478 AS MODIFIED BY THE SPECIFICATIONS.
2. NON-SHRINK GROUT SHALL BE NON-METALLIC TYPE.
3. APPROVED FLEXIBLE WATERSTOP GASKETS SHALL BE INSTALLED TO JOIN THE SEWER TO THE MANHOLE WALL WHEN A.B.S. COMPOSITE PIPE OR P.V.C. PIPE IS USED. FOR OTHER TYPES OF PIPE THE SEWER SHALL BE GROUTED IN PLACE WITH NON-SHRINK GROUT. THE SEWER PIPE SHALL BE SUPPORTED WITH CONCRETE ENCASEMENT A MINIMUM OF 3 FEET FROM THE MANHOLE WALL AND TO THE FIRST JOINT FOR V.C.P. SUCH THAT THE JOINT REMAINS FLEXIBLE.
4. ALL INSIDE SURFACES OF THE CONCRETE MANHOLE WHICH WOULD BE EXPOSED TO SEWER GAS SHALL BE COATED WITH 2 COATS TNEMEC SERIES 66 HI-BUILD EPOXOLINE, DRY THICKNESS OF 8 MILS (MIN.)
5. EXTERIOR MANHOLE WALLS SHALL BE COATED WITH 1 COAT MOBILARMA 633 BITUMINUS COATING.
6. JOINT SEALING COMPOUND SHALL BE KENT SEAL NO. 2 OR APPROVED EQUAL.
7. PRECAST MANHOLES SHALL BE SET AT LEAST 4 INCHES INTO THE MANHOLE BASE.
8. TOP OF MANHOLE FLOOR SLAB SHALL BE AT LEAST 3 INCHES BELOW THE FLOW LINE OF THE OUTLET PIPE TO INSURE SUFFICIENT MINIMUM THICKNESS OF SHAPED INVERT.
9. LIFTING HOLES SHALL BE FILLED WITH NON-SHRINK GROUT AND THE INTERIOR SURFACE COATED AS SPECIFIED.
10. MORTAR USED IN MASONRY CONSTRUCTION SHALL CONTAIN 6 SACKS OF CEMENT PER CUBIC YARD. CONCRETE USED IN MANHOLE BASES SHALL CONFORM TO THE REQUIREMENTS OF CONCRETE FOR CONCRETE PAVEMENT CONSTRUCTION AS SPECIFIED IN THE CITY STANDARD PAVING SPECIFICATIONS USING CITY CONCRETE PAVEMENT MIX WITHOUT AIR ENTRAINING ADMIXTURE. MORTAR SHALL BE PLACED AROUND THE MANHOLE RING AS SHOWN ON THE DRAWINGS WHEN MANHOLES ARE CONSTRUCTED IN UNPAVED AREAS. MANHOLES CONSTRUCTED WHERE PIPE SIZES ARE SMALLER THAN 24" SHALL HAVE AN INSIDE DIAMETER OF 4'. MANHOLES CONSTRUCTED WHERE PIPE SIZES ARE 24" OR LARGER SHALL HAVE AN INSIDE DIAMETER OF 5'. COMPLETED MANHOLE SHALL BE WITHOUT LEAKS AND WATER TIGHT.
11. REINFORCING STEEL SHALL BE INSTALLED IN THE MANHOLE BASES AND SHALL CONSIST OF NO. 4 BARS PLACED ON 6" CENTERS IN BOTH DIRECTIONS. THE MANHOLE BASE REINFORCEMENT SHALL BE PLACED AT LEAST 3" ABOVE THE BOTTOM OF THE MANHOLE BASE. ALL COSTS FOR FURNISHING AND INSTALLING REINFORCING STEEL SHALL BE INCLUDED IN THE UNIT PRICE BID FOR THE MANHOLE.
12. OPENINGS SHALL BE CUT INTO THE MANHOLE WALL WHEN OUTSIDE DROPS ARE CONSTRUCTED ON EXISTING MANHOLES. SUCH OPENINGS CUT INTO EXISTING MANHOLES SHALL BE AS SMALL AS PRACTICAL TO FACILITATE INSTALLING AND GROUTING THE NEW PIPE IN PLACE. WATERSTOP GASKETS SHALL BE USED WITH P.V.C. AND A.B.S. COMPOSITE PIPE. THE NEW PIPE SHALL BE GROUTED INTO THE OPENING USING AN APPPOVED NONSHRINK GROUT FOR THE FULL MANHOLE WALL THICKNESS. THE EXTERIOR OF THE COMPLETED CONNECTION SHALL BE SEALED WITH AN APPROVED BITUMINOUS COATING SUCH THAT THE CONNECTION WILL BE WATER TIGHT. FLOOR OF MANHOLE SHALL BE MODIFIED TO FORM NEW FLOW CHANNEL FOR THE NEW CONNECTION AS INDICATED BY THE DRAWING. THIS WORK, INCLUDING MODIFICATION OF MANHOLE FLOOR, SHALL BE PAID FOR AT THE UNIT PRICE BID FOR OUTSIDE DROP STACK CONSTRUCTED ON EXISTING MANHOLE.
13. THE FLOORS OF ALL MANHOLES SHALL BE SHAPED WITH FLOW CHANNELS SUCH THAT THE MANHOLES WILL BE SELF CLEANING AND FREE OF AREAS WHERE SOLIDS COULD BE DEPOSITED AS SEWAGE FLOWS THROUGH THE MANHOLE FROM ALL INLET PIPES TO THE OUTLET PIPE. FLOW CHANNELS SHALL BE FORMED TO MATCH THE BOTTOM HALVES OF THE INFLOWING PIPES AND THE OUTFLOWING PIPE AS SHOWN BY THE DRAWINGS EXCEPT FOR INSIDE DROP MANHOLES. FLOW CHANNELS FOR INSIDE DROP MANHOLES SHALL BE CONSTRUCTED AS INDICATED BY THE DRAWING. MANHOLE FLOORS SHALL HAVE SLOPES OF 3 INCHES PER FOOT IN THE AREAS OUTSIDE OF THE FLOW CHANNELS SLOPED TOWARD THE FLOW CHANNELS. PIPES LAID THROUGH MANHOLES SHALL HAVE THE TOP HALF REMOVED TO NEAT LINES FOR THE FULL INSIDE DIAMETER OF THE MANHOLE. MANHOLE FLOORS SHALL THEN BE SHAPED AROUND THE BOTTOM HALF OF THE PIPE WHICH FORMS THE FLOW CHANNEL.
14. PIPES INSTALLED WITHIN THE EXCAVATION MADE FOR THE MANHOLE SHALL BE CRADLED WITH CONCRETE TO THE LIMITS OF THE MANHOLE EXCAVATION. WHEN CLAY PIPE IS USED, THE CRADLE SHALL EXTEND TO THE FIRST JOINT OUTSIDE THE MANHOLE. THE CRADLE SHALL BE TERMINATED AT THE CLAY PIPE JOINT IN A MANNER WHICH WILL MAINTAIN THE FLEXIBILITY OF THE JOINT. COST OF CRADLE WITHIN MANHOLE EXCAVATION OR TO CLAY PIPE JOINTS ADJACENT TO MANHOLE SHALL BE INCLUDED IN THE UNIT PRICE BID FOR THE MANHOLE.
15. MANHOLE COVER CASTINGS AND MANHOLE FRAME CASTINGS SHALL CONFORM TO THE REQUIREMENTS AS INDICATED IN THE STANDARD SPECIFICATIONS AND AS SHOWN IN THE STANDARD DETAIL DRAWING.
16. THE VERTICAL DROP IN INSIDE DROP MANHOLES SHALL NOT EXCEED 2' FOR INFLOWING PIPES. THE CROWNS OF INFLOWING PIPES SHALL NEVER BE SET LOWER THAN THE CROWN OF THE OUTFLOWING PIPE.
17. STANDARD MANHOLES AND STANDARD INSIDE DROP MANHOLES SHALL BE BID AS STANDARD MANHOLES FOR THE TYPE AND DIAMETER INDICATED. OUTSIDE DROP MANHOLES SHALL BE BID AS STANDARD OUTSIDE DROP MANHOLES FOR THE TYPE AND DIAMETER INDICATED. ALL MANHOLE DIAMETERS WILL BE 4' UNLESS INDICATED OTHERWISE.
18. A BRICK MASONRY COLLAR SHALL BE INSTALLED BETWEEN THE CAST IRON FRAME AND THE CONCENTRIC CONE. THE COLLAR WILL HAVE 8" WALLS AND A VERTICAL HEIGHT OF 6" MINIMUM AND 18" MAXIMUM. A 1" COAT OF MORTAR WILL BE PLASTERED ON THE OUTSIDE OF THE COLLAR.

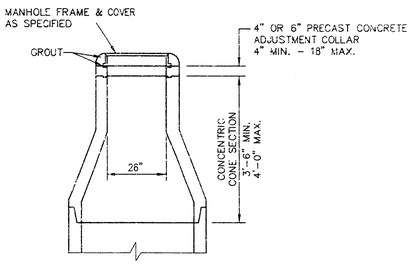


**ALTERNATE CONSTRUCTION**
**IN UNPAVED AREAS**

REVISED: 6-12-86

MID-KANSAS ENGINEERING CONSULTANTS, INC.
411 N. WEBB ROAD
WICHITA, KS. 67206
316-684-9609

GEORGE WASHINGTON STORAGE ADDITION
PROJECT NAME

MANHOLE DETAILS
SHEET TITLE

| G.J.A. | B.D.M. | G.J.A. |
|---|---|---|
| DESIGN BY: | DRAWN BY: | CHECKED BY: |
| 12/15/94 | 94150-D2 | 2 / 4 |
| DATE | JOB NO. | SHEET/OF |

NOTE: GRATES SHALL BE IMPRINTED ON THE TOP SURFACE WITH "CITY OF WICHITA" USING LETTERS AT LEAST 1" IN HEIGHT. OTHER MARKING METHODS MAY BE USED ONLY IF APPROVED BY THE ENGINEER.

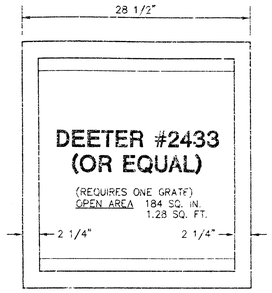


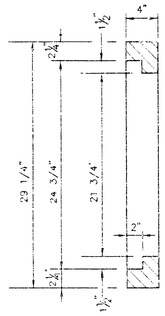


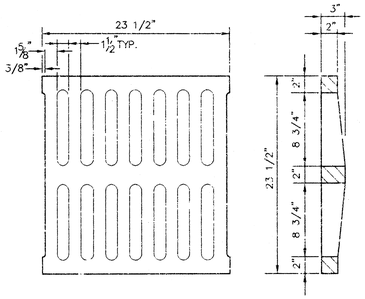





GRATE

24"x24" FRAME & GRATE DETAIL

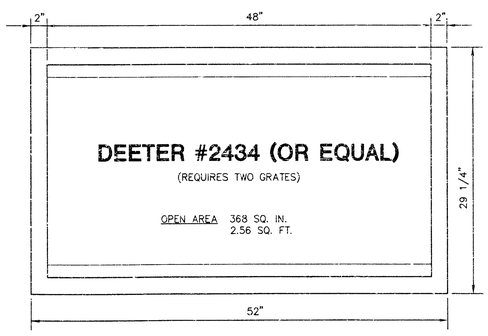


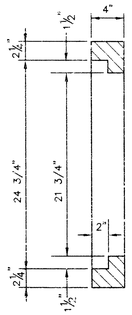


DOUBLE 24"x24" FRAME DETAIL

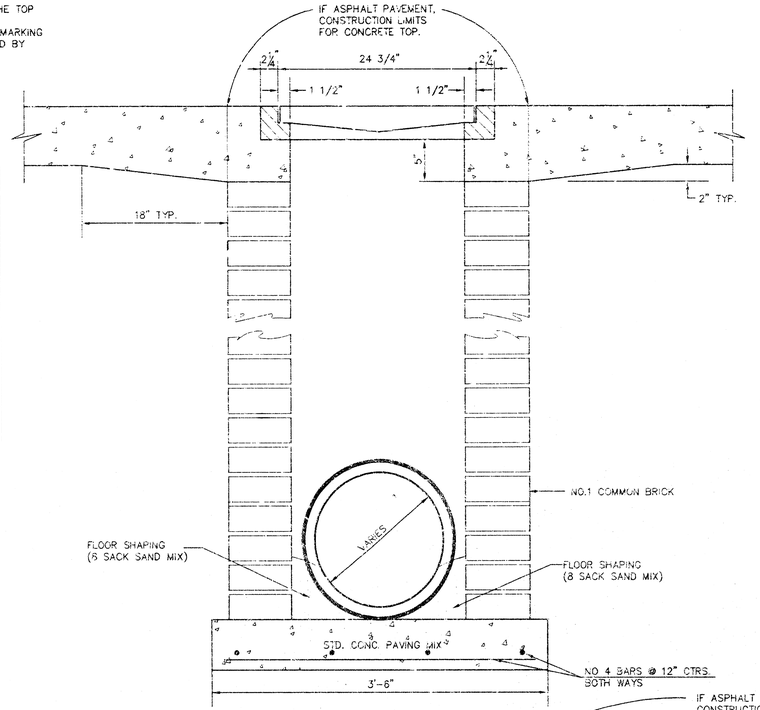


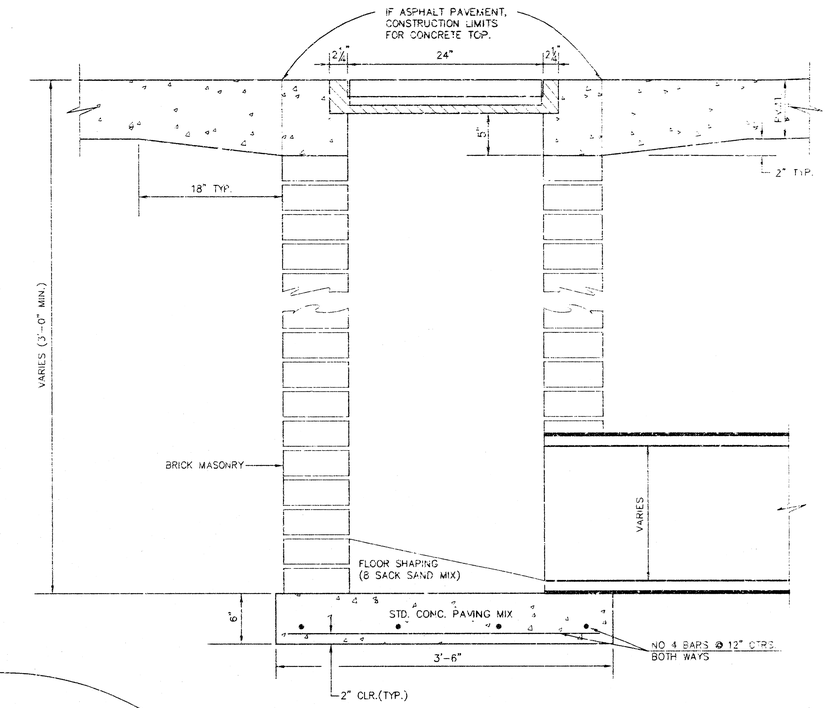


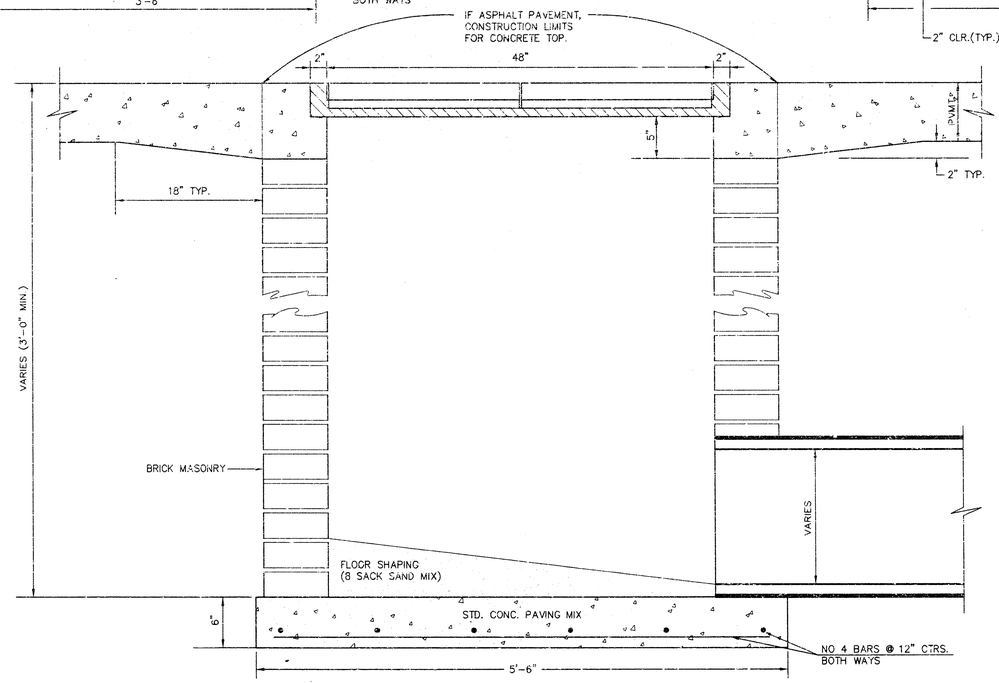


| ORIFICE EQUATION | | |
|---|---|---|
| $Q=CA\sqrt{2gh}$ C=0.60 | | |
| h (DEPTH) | #2433 (SINGLE) | #2434 (DOUBLE) |
| 0.1 | 1.95 cfs | 3.89 cfs |
| 0.2 | 2.75 cfs | 5.50 cfs |
| 0.3 | 3.37 cfs | 6.74 cfs |
| 0.4 | 3.89 cfs | 7.78 cfs |
| 0.5 | 4.35 cfs | 8.70 cfs |
| 0.6 | 4.77 cfs | 9.53 cfs |
| 0.7 | 5.15 cfs | 10.30 cfs |
| 0.8 | 5.50 cfs | 11.01 cfs |
| 0.9 | 5.84 cfs | 11.67 cfs |
| 1.0 | 6.15 cfs | 12.30 cfs |

REVISED: 5-8-90 JNJ

# DROP INLET DETAILS

CITY OF WICHITA, KANSAS

| Design C.O.W. | Checked by | Checked by | |
|---|---|---|---|
| Drawn by | Date | Date | Job No. |

GEORGE WASHINGTON
STORAGE ADDITION
SANITARY SEWER PLANS
LINE 1 & LINE 2

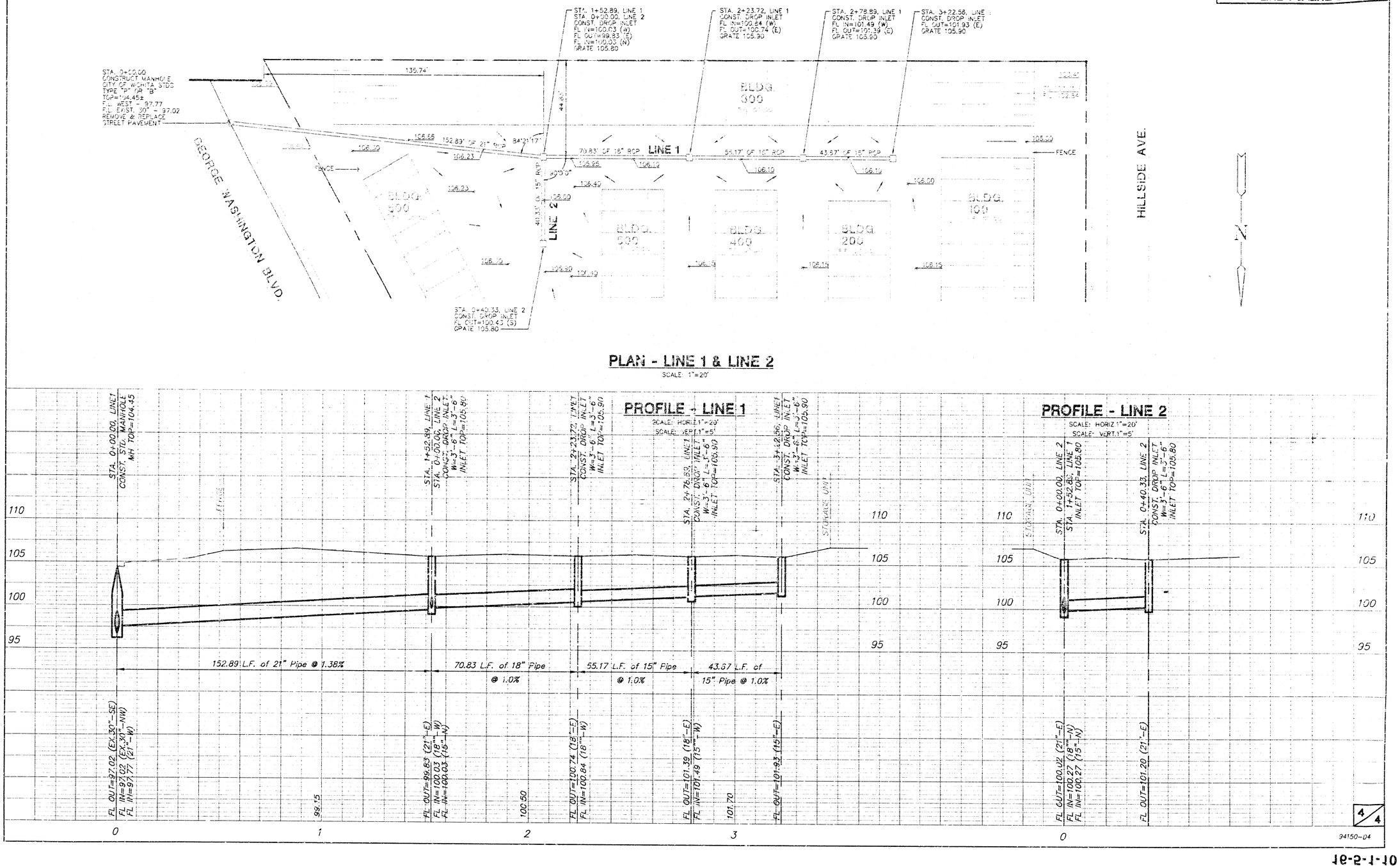


01-1-5-91

# PRIVATE
# CONSTRUCTION PLANS FOR
# STORM WATER SEWER IMPROVEMENTS
# TO SERVE
# LOT 1 BLOCK 1, GEORGE WASHINGTON STORAGE ADDITION

## PROJECT NO. 519PPS (607861)

APPROVED AS NOTED
BY CITY ENGINEER OF WICHITA

SANITARY SEWERS_____

STORM SEWERS VRH 12/16/94

DRIVEWAY APPROACHED_____

WATER MAINS_____

PAVING_____

NOTE TO CONTRACTOR

INSPECTION AND TESTING FOR THIS PROJECT IS TO BE PROVIDED BY A LICENSED CONSULTING ENGINEERING FIRM UNDER CONTRACT WITH THE OWNER/DEVELOPER. SAID INSPECTION TO BE IN ACCORDANCE WITH THE CITY OF WICHITA STANDARD CONSTRUCTION ENGINEERING PRACTICES AND CERTIFIED BY A LICENSED PROFESSIONAL ENGINEER. NO WORK SHALL BE PERFORMED IN DEDICATED EASEMENTS OR THE PUBLIC RIGHT-OF-WAY BY THE CONTRACTOR WITHOUT SUCH INSPECTION NOR SHALL ANY WORK BE COMMENCED IN DEDICATED EASEMENTS OR PUBLIC RIGHT-OF-WAY WITHOUT WRITTEN AUTHORIZATION BY THE CITY ENGINEER.

## GENERAL NOTES

1. THE CONTRACTOR SHALL BE RESPONSIBLE FOR PRESERVING PROPERTY IRONS. THE CONTRACTOR SHALL BE REQUIRED TO RE-ESTABLISH ANY PROPERTY IRONS WHICH ARE DAMAGED OR DESTROYED BY THE CONSTRUCTION OPERATION. SUCH IRONS SHALL BE RE-ESTABLISHED BY A LICENSED LAND SURVEYOR IN ACCORDANCE WITH STATE LAWS.

2. ALL ELEVATIONS SHOWN ON THESE PLANS ARE ON CITY OF WICHITA DATUM. WICHITA DATUM = N.G.V.D. – 1187.4

3. UNDERGROUND UTILITY SERVICE LINES AND OVERHEAD UTILITY POLES AND LINES ARE TO BE ADJUSTED AS NECESSARY BY OTHERS PRIOR TO CONSTRUCTION, UNLESS THE PLANS SPECIFICALLY IDENTIFY A UTILITY TO BE ADJUSTED BY ITS OWNER DURING CONSTRUCTION. EXISTING UTILITY LOCATIONS, AS SHOWN ON THESE PLANS, REPRESENT THE BEST INFORMATION OBTAINABLE FOR DESIGN. LOCATION INFORMATION HAS BEEN OBTAINED FROM THE VARIOUS UTILITY COMPANIES, AND IS EITHER FROM CITY PLANS, COMPANY RECORDS, DRAWINGS, OR COMPANY PROVIDED FIELD LOCATIONS. THE CONTRACTOR WILL BE REQUIRED TO WORK AROUND EXISTING UTILITIES WHICH DO NOT CONFLICT WITH PROPOSED CONSTRUCTION. IF ADDITIONAL UTILITY LINES ARE ENCOUNTERED DURING CONSTRUCTION, THEIR OWNERS SHOULD BE IMMEDIATELY ADVISED, SO THAT NECESSARY ADJUSTMENTS OR RELOCATIONS CAN BE MADE. THE CONTRACTOR SHALL LOCATE ALL UTILITY LINES PRIOR TO EXCAVATION.

4. THE CONTRACTOR SHALL PROVIDE A MINIMUM ADVANCED NOTICE OF FORTY-EIGHT (48 HOURS) TO ALL THE FOLLOWING COMPANIES PRIOR TO EXCAVATION:

| | |
|---|---|
| KANSAS ONE CALL | 1-800-344-7233 OR 687-2470 (WICHITA) |
| KG&E (ELECTRIC) | 264-1411 |
| KG&E (GAS DISTRIBUTION) | 832-9012 |
| MULTIMEDIA CABLEVISION | 262-0661 |
| SOUTHWESTERN BELL TELEPHONE COMPANY | 1-571-2115 (REPAIR) |
| CITY OF WICHITA WATER AND SEWER | 268-4908 |
| CITY OF WICHITA STORM WATER UTILITY | 268-4498 |

5. ALL ADJACENT BUILDINGS, STRUCTURES, PARKING LOTS, DRIVES, STREET PAVEMENTS, AND APPURTENANCES OTHER THAN SHOWN ON THESE PLANS FOR REPLACEMENT SHALL BE PROTECTED FROM DAMAGE DURING CONSTRUCTION. ITEMS DAMAGED BEYOND CONSTRUCTION LIMITS SHALL BE REMOVED AND REPLACED BY THE CONTRACTOR AT NO COST TO THE CITY.

6. TREES AND SHRUBS IN THE CONSTRUCTION AREA WHICH ARE IN DIRECT CONFLICT WITH THE PROPOSED CONSTRUCTION SHALL BE REMOVED BY THE CONTRACTOR. TREES AND SHRUBS DESIGNATED BY THE CITY TO REMAIN SHALL BE SAVED AND PROTECTED FROM DAMAGE.

7. RUBBLE FROM THE REMOVAL OF MISCELLANEOUS STRUCTURES AND EXCESS EXCAVATION WHICH IS TO BE WASTED SHALL BE DISPOSED OF ON SITES TO BE PROVIDED BY THE CONTRACTOR. THESE SITES SHALL BE APPROVED BY THE ENGINEER AS TO SUITABILITY, APPEARANCE AND SITE LOCATION. LOCATIONS THAT, IN THE OPINION OF THE ENGINEER, WILL LEAVE AN UNSIGHTLY APPEARANCE WILL NOT BE APPROVED. ALL DISPOSAL SITES MUST BE APPROVED BY THE KANSAS DEPARTMENT OF HEALTH AND ENVIRONMENT. MATERIAL EITHER STOCKPILED OR DISPOSED OF IN A FLOOD PLAIN WOULD REQUIRE A KANSAS DEPARTMENT OF AGRICULTURE PERMIT. ANY MATERIAL DUMPED IN THE WATERS OF THE UNITED STATES OR WETLANDS IS SUBJECT TO U.S. ARMY, CORPS OF ENGINEERS PERMITTING REGULATIONS. ANY MATERIAL BURIED OR STOCKPILED BEYOND APPROVED CONSTRUCTION LIMITS WOULD REQUIRE ADDITIONAL ARCHAEOLOGICAL INVESTIGATIONS UNLESS BURIED IN A PREVIOUSLY APPROVED BORROW LOCATION.

8. ALL DISTURBED UNPAVED AREA SHALL BE SEEDED & MULCHED.

## BENCHMARKS

BM #1 TOP OF INLET 246.40 FT. NORTH OF SOUTH PROPERTY LINE LOT 1 BLOCK 1 GEORGE WASHINGTON STORAGE ADDITION AND WEST SIDE OF GEORGE WASHINGTON BLVD.
ELEV.=105.48

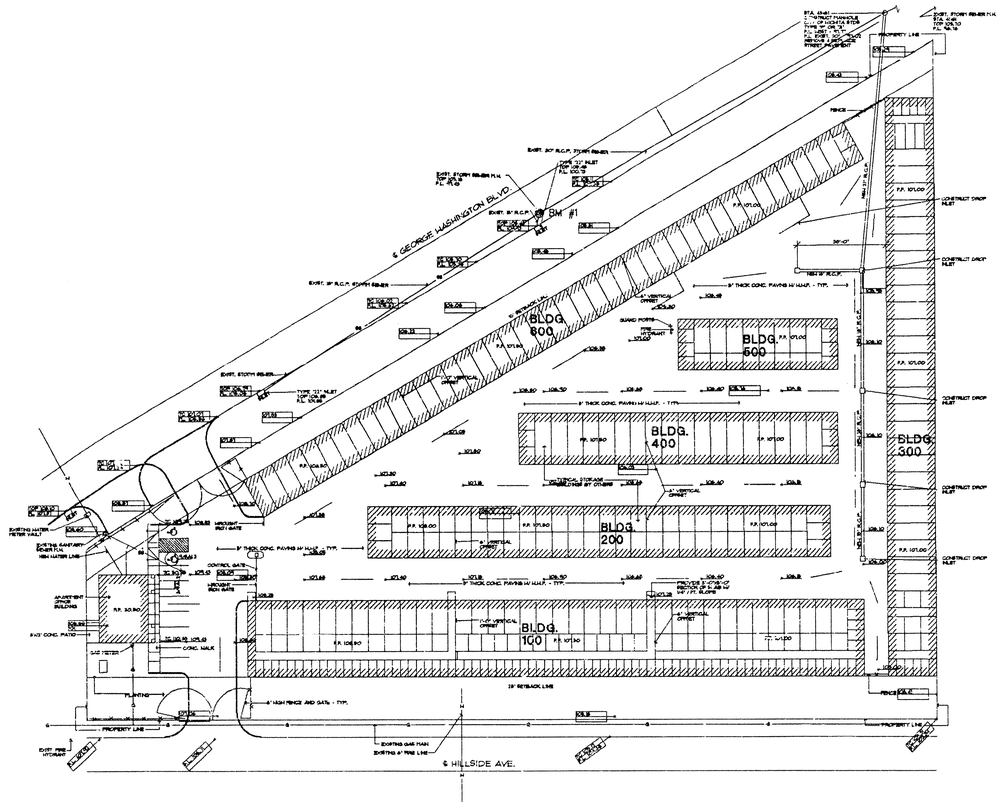


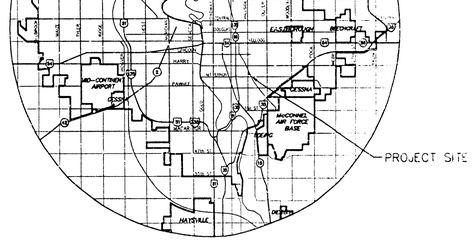


LOCATION MAP

## INDEX TO DRAWINGS

| SHEET NO. | DESCRIPTION |
|---|---|
| 1 | TITLE SHEET |
| 2 | MANHOLE DETAILS |
| 3 | DROP INLET DETAILS |
| 4 | LINE 1 & 2 PLAN & PROFILE |

BOOKED 4-18-97 MCG D-336

GREGORY J. KLAUS LICENSED PROFESSIONAL ENGINEER 11150 KANSAS 12/15/94

N

SCALE: 1" = 40'

0 40 80

AS BUILT: 3-12-97

MID-KANSAS ENGINEERING CONSULTANTS, INC.
411 N. WEBB ROAD
WICHITA, KS. 67206
316-684-9600

**GEORGE WASHINGTON STORAGE ADDITION**
PROJECT NAME

**TITLE SHEET**
SHEET TITLE

| G.J.A. | B.D.M. | C.J.A. |
|---|---|---|
| DESIGN BY: | DR. WN BY: | CHECKED BY: |
| 12/15/94 | 94150-DT | 1 / 4 |
| DATE | JOB NO. | SHEET/OF |

# SEWER APPURTENANCES DETAILS

## ADOPTED AS STANDARD DESIGN BY CITY OF WICHITA

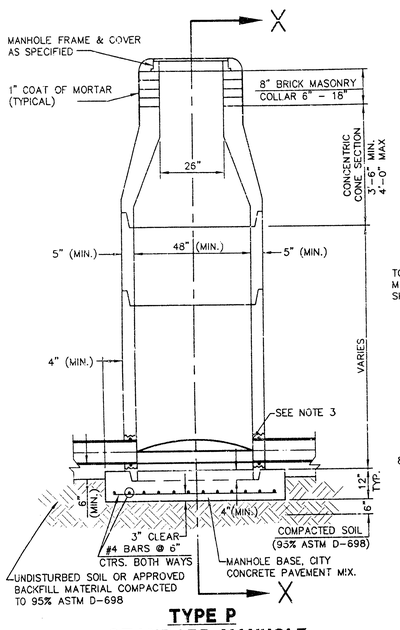


**TYPE P**
**STANDARD MANHOLE**

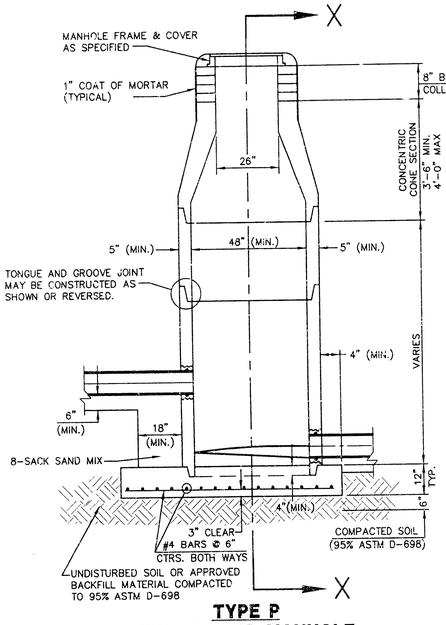


**TYPE P**
**INSIDE DROP MANHOLE**

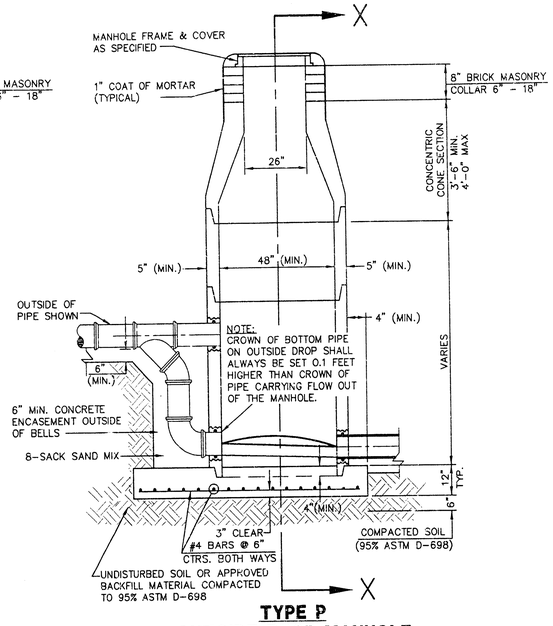


**TYPE P**
**OUTSIDE DROP MANHOLE**

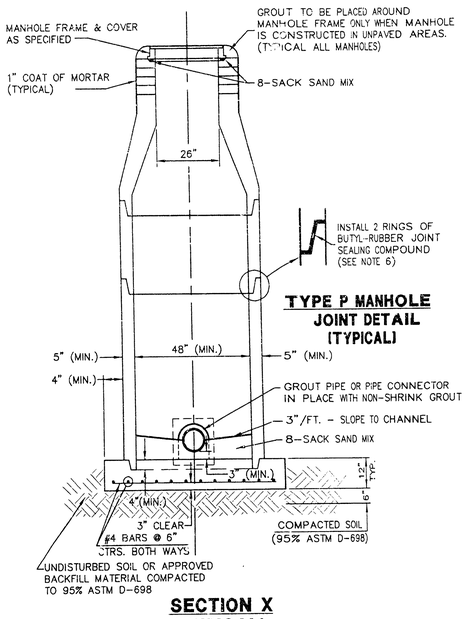


**TYPE P MANHOLE JOINT DETAIL (TYPICAL)**

**SECTION X (TYPICAL)**

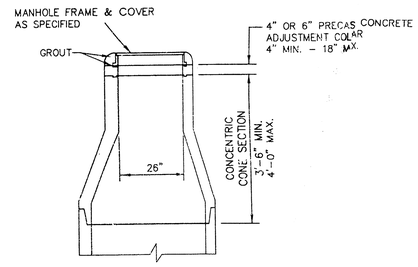


**ALTERNATE CONSTRUCTION IN UNPAVED AREAS**

## GENERAL NOTES - PRECAST MANHOLE NOTES

1. ALL PRECAST CONCRETE MANHOLE SECTIONS SHALL CONFORM TO THE LATEST REVISIONS OF A.S.T.M. C478 AS MODIFIED BY THE SPECIFICATIONS.
2. NON-SHRINK GROUT SHALL BE NON-METALLIC TYPE.
3. APPROVED FLEXIBLE WATERSTOP GASKETS SHALL BE INSTALLED TO JOIN THE SEWER TO THE MANHOLE WALL WHEN A.B.S. COMPOSITE PIPE OR P.V.C. PIPE IS USED. FOR OTHER TYPES OF PIPE THE SEWER SHALL BE GROUTED IN PLACE WITH NON-SHRINK GROUT. THE SEWER PIPE SHALL BE SUPPORTED WITH CONCRETE ENCASEMENT A MINIMUM OF 3 FEET FROM THE MANHOLE WALL AND TO THE FIRST JOINT FOR V.C.P. SUCH THAT THE JOINT REMAINS FLEXIBLE.
4. ALL INSIDE SURFACES OF THE CONCRETE MANHOLE WHICH WOULD BE EXPOSED TO SEWER GAS SHALL BE COATED WITH 2 COATS TNEMEC SERIES 66 HI-BUILD EPOXOLINE, DRY THICKNESS OF 8 MILS (MIN.)
5. EXTERIOR MANHOLE WALLS SHALL BE COATED WITH 1 COAT MOBILARMA 633 BITUMINUS COATING.
6. JOINT SEALING COMPOUND SHALL BE KENT SEAL NO. 2 OR APPROVED EQUAL.
7. PRECAST MANHOLES SHALL BE SET AT LEAST 4 INCHES INTO THE MANHOLE BASE.
8. TOP OF MANHOLE FLOOR SLAB SHALL BE AT LEAST 3 INCHES BELOW THE FLOW LINE OF THE OUTLET PIPE TO INSURE SUFFICIENT MINIMUM THICKNESS OF SHAPED INVERT.
9. LIFTING HOLES SHALL BE FILLED WITH NON-SHRINK GROUT AND THE INTERIOR SURFACE COATED AS SPECIFIED.
10. MORTAR USED IN MASONRY CONSTRUCTION SHALL CONTAIN 8 SACKS OF CEMENT PER CUBIC YARD. CONCRETE USED IN MANHOLE BASES SHALL CONFORM TO THE REQUIREMENTS OF CONCRETE FOR CONCRETE PAVEMENT CONSTRUCTION AS SPECIFIED IN THE CITY STANDARD PAVING SPECIFICATIONS USING CITY CONCRETE PAVEMENT MIX WITHOUT AIR ENTRAINING ADMIXTURE. MORTAR SHALL BE PLACED AROUND THE MANHOLE RING AS SHOWN ON THE DRAWINGS WHEN MANHOLES ARE CONSTRUCTED IN UNPAVED AREAS. MANHOLES CONSTRUCTED WHERE PIPE SIZES ARE SMALLER THAN 24" SHALL HAVE AN INSIDE DIAMETER OF 4'. MANHOLES CONSTRUCTED WHERE PIPE SIZES ARE 24" OR LARGER SHALL HAVE AN INSIDE DIAMETER OF 5'. COMPLETED MANHOLE SHALL BE WITHOUT LEAKS AND WATER TIGHT.
11. REINFORCING STEEL SHALL BE INSTALLED IN THE MANHOLE BASES AND SHALL CONSIST OF NO. 4 BARS PLACED ON 6" CENTERS IN BOTH DIRECTIONS. THE MANHOLE BASE REINFORCEMENT SHALL BE PLACED AT LEAST 3" ABOVE THE BOTTOM OF THE MANHOLE BASE. ALL COSTS FOR FURNISHING AND INSTALLING REINFORCING STEEL SHALL BE INCLUDED IN THE UNIT PRICE BID FOR THE MANHOLE.
12. OPENINGS SHALL BE CUT INTO THE MANHOLE WALL WHEN OUTSIDE DROPS ARE CONSTRUCTED ON EXISTING MANHOLES. SUCH OPENINGS CUT INTO EXISTING MANHOLES SHALL BE AS SMALL AS PRACTICAL TO FACILITATE INSTALLING AND GROUTING THE NEW PIPE IN PLACE. WATERSTOP GASKETS SHALL BE USED WITH P.V.C. AND A.B.S. COMPOSITE PIPE. THE NEW PIPE SHALL BE GROUTED INTO THE OPENING USING AN APPROVED NONSHRINK GROUT FOR THE FULL MANHOLE WALL THICKNESS. THE EXTERIOR OF THE COMPLETED CONNECTION SHALL BE SEALED WITH AN APPROVED BITUMINOUS COATING SUCH THAT THE CONNECTION WILL BE WATER TIGHT. FLOOR OF MANHOLE SHALL BE MODIFIED TO FORM NEW FLOW CHANNEL FOR THE NEW CONNECTION AS INDICATED BY THE DRAWING. THIS WORK, INCLUDING MODIFICATION OF MANHOLE FLOOR, SHALL BE PAID FOR AT THE UNIT PRICE BID FOR OUTSIDE DROP STACK CONSTRUCTED ON EXISTING MANHOLE.
13. THE FLOORS OF ALL MANHOLES SHALL BE SHAPED WITH FLOW CHANNELS SUCH THAT THE MANHOLES WILL BE SELF CLEANING AND FREE OF AREAS WHERE SOLIDS COULD BE DEPOSITED AS SEWAGE FLOWS THROUGH THE MANHOLE FROM ALL INLET PIPES TO THE OUTLET PIPE. FLOW CHANNELS SHALL BE FORMED TO MATCH THE BOTTOM HALVES OF THE INFLOWING PIPES AND THE OUTFLOWING PIPE AS SHOWN BY THE DRAWINGS EXCEPT FOR INSIDE DROP MANHOLES. FLOW CHANNELS FOR INSIDE DROP MANHOLES SHALL BE CONSTRUCTED AS INDICATED BY THE DRAWING. MANHOLE FLOORS SHALL HAVE SLOPES OF 3 INCHES PER FOOT IN THE AREAS OUTSIDE OF THE FLOW CHANNELS SLOPED TOWARD THE FLOW CHANNELS. PIPES LAID THROUGH MANHOLES SHALL HAVE THE TOP HALF REMOVED TO NEAT LINES FOR THE FULL INSIDE DIAMETER OF THE MANHOLE. MANHOLE FLOORS SHALL THEN BE SHAPED AROUND THE BOTTOM HALF OF THE PIPE WHICH FORMS THE FLOW CHANNEL.
14. PIPES INSTALLED WITHIN THE EXCAVATION MADE FOR THE MANHOLE SHALL BE CRADLED WITH CONCRETE TO THE LIMITS OF THE MANHOLE EXCAVATION. WHEN CLAY PIPE IS USED, THE CRADLE SHALL EXTEND TO THE FIRST JOINT OUTSIDE THE MANHOLE. THE CRADLE SHALL BE TERMINATED AT THE CLAY PIPE JOINT IN A MANNER WHICH WILL MAINTAIN THE FLEXIBILITY OF THE JOINT. COST OF CRADLE WITHIN MANHOLE EXCAVATION OR TO CLAY PIPE JOINTS ADJACENT TO MANHOLE SHALL BE INCLUDED IN THE UNIT PRICE BID FOR THE MANHOLE.
15. MANHOLE COVER CASTINGS AND MANHOLE FRAME CASTINGS SHALL CONFORM TO THE REQUIREMENTS AS INDICATED IN THE STANDARD SPECIFICATIONS AND AS SHOWN IN THE STANDARD DETAIL DRAWING.
16. THE VERTICAL DROP IN INSIDE DROP MANHOLES SHALL NOT EXCEED 2' FOR INFLOWING PIPES. THE CROWNS OF INFLOWING PIPES SHALL NEVER BE SET LOWER THAN THE CROWN OF THE OUTFLOWING PIPE.
17. STANDARD MANHOLES AND STANDARD INSIDE DROP MANHOLES SHALL BE BID AS STANDARD MANHOLES FOR THE TYPE AND DIAMETER INDICATED. OUTSIDE DROP MANHOLES SHALL BE BID AS STANDARD OUTSIDE DROP MANHOLES FOR THE TYPE AND DIAMETER INDICATED. ALL MANHOLE DIAMETERS WILL BE 4' UNLESS INDICATED OTHERWISE.
18. A BRICK MASONRY COLLAR SHALL BE INSTALLED BETWEEN THE CAST IRON FRAME AND THE CONCENTRIC CONE. THE COLLAR WILL HAVE 8" WALLS AND A VERTICAL HEIGHT OF 6" MINIMUM AND 18" MAXIMUM. A 1" COAT OF MORTAR WILL BE PLASTERED ON THE OUTSIDE OF THE COLLAR.

REVISED: 6-12-86 AS BUILT: 3-12-97


MID-KANSAS ENGINEERING CONSULTANTS, INC.
411 N. WEBB ROAD
WICHITA, KS. 67206
316-684-9600


GEORGE WASHINGTON STORAGE ADDITION
PROJECT NAME

MANHOLE DETAILS
SHEET TITLE

| G.J.A. | B.D.M. | G.J.A. |
|---|---|---|
| DESIGN BY: | DRAWN BY: | CHECKED BY: |
| 12/15/94 | 94150-02 | 2 / 4 |
| DATE | JOB NO. | SHEET/OF |

NOTE: GRATES SHALL BE IMPRINTED ON THE TOP SURFACE WITH "CITY OF WICHITA" USING LETTERS AT LEAST 1" IN HEIGHT. OTHER MARKING METHODS MAY BE USED ONLY IF APPROVED BY THE ENGINEER.

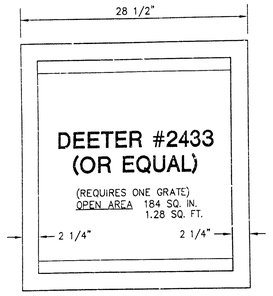


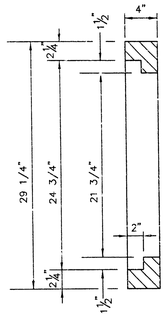


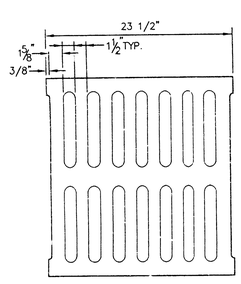


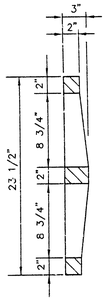


GRATE

24"x24" FRAME & GRATE DETAIL

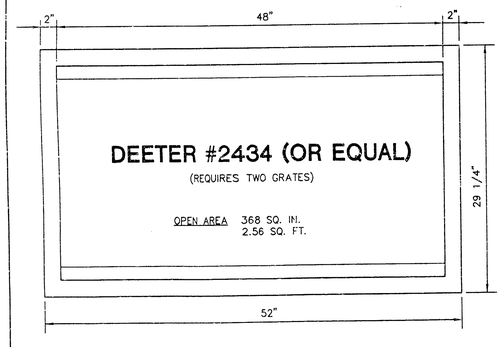


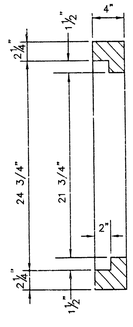


DOUBLE 24"x24" FRAME DETAIL

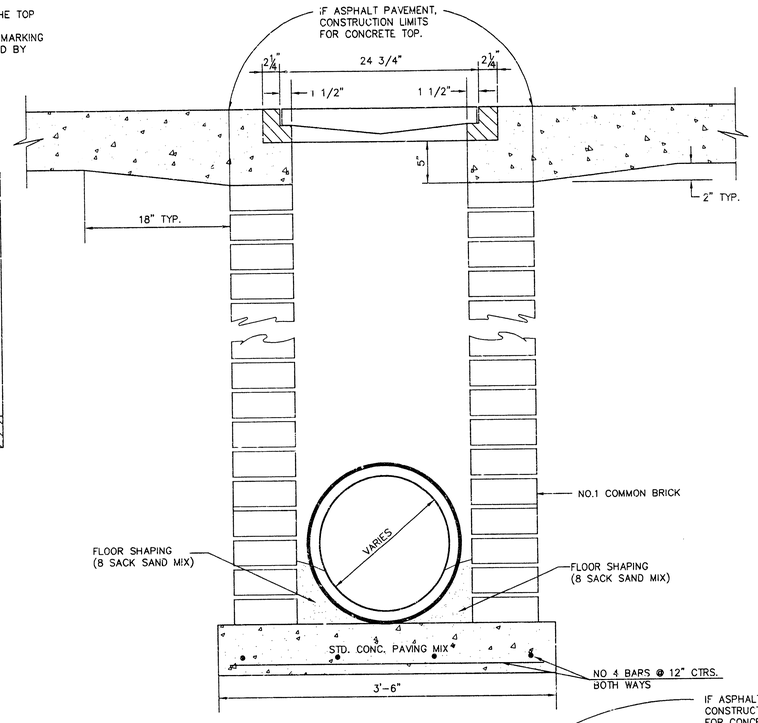


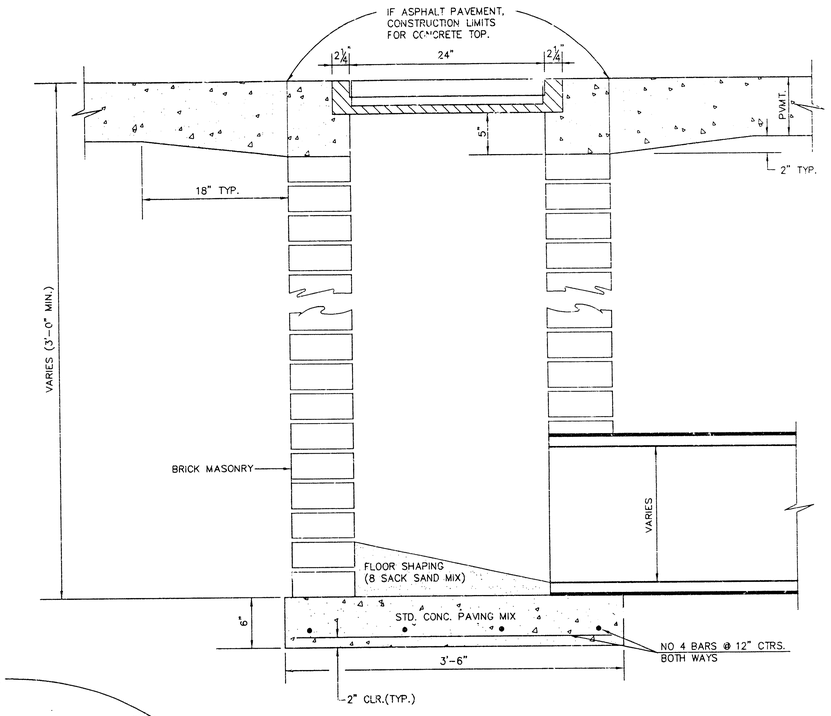


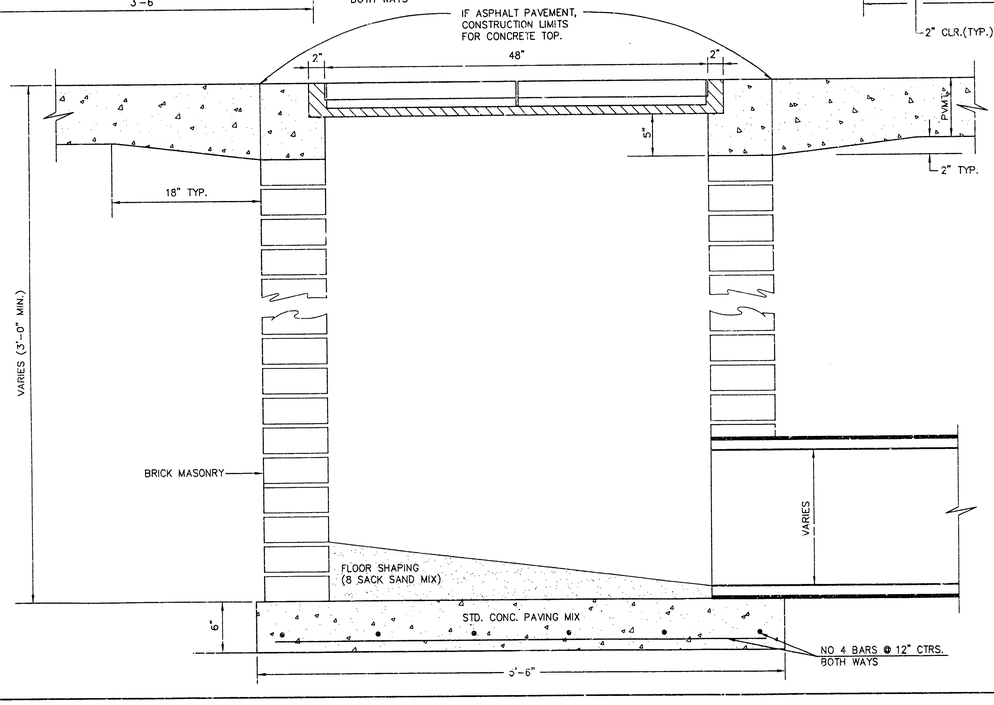


| ORIFICE EQUATION | | |
|---|---|---|
| Q=CA $\sqrt{2gh}$ C=0.60 | | |
| h (DEPTH) | #2433 (SINGLE) | #2434 (DOUBLE) |
| 0.1 | 1.95 cfs | 3.89 cfs |
| 0.2 | 2.75 cfs | 5.50 cfs |
| 0.3 | 3.37 cfs | 6.74 cfs |
| 0.4 | 3.89 cfs | 7.78 cfs |
| 0.5 | 4.35 cfs | 8.70 cfs |
| 0.6 | 4.77 cfs | 9.53 cfs |
| 0.7 | 5.15 cfs | 10.30 cfs |
| 0.8 | 5.50 cfs | 11.01 cfs |
| 0.9 | 5.84 cfs | 11.67 cfs |
| 1.0 | 6.15 cfs | 12.30 cfs |

REVISED: 5-8-90 JNJ AS BUILT: 3-12-97

# DROP INLET DETAILS

CITY OF WICHITA, KANSAS

| Design C.O.W. | Checked by | Checked by | |
|---|---|---|---|
| Drawn by | Date | Date | Job No. |

**GEORGE WASHINGTON STORAGE ADDITION SANITARY SEWER PLANS LINE 1 & LINE 2**

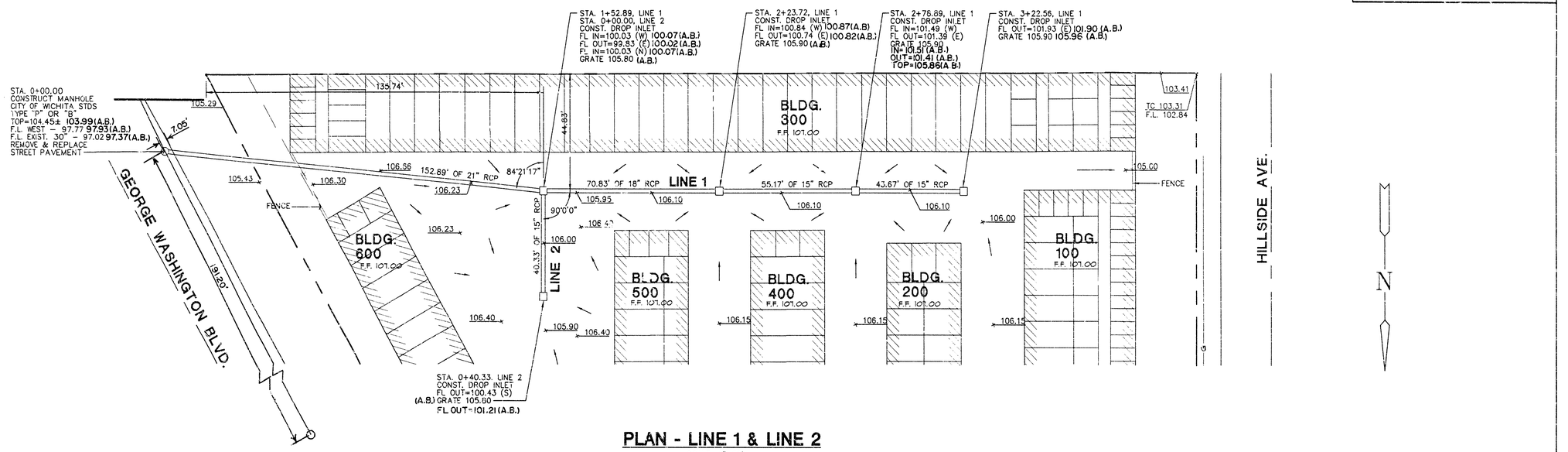


## PLAN - LINE 1 & LINE 2

SCALE: 1"=20'

## PROFILE - LINE 1

SCALE: HORIZ.1"=20'
SCALE: VERT.1"=5'

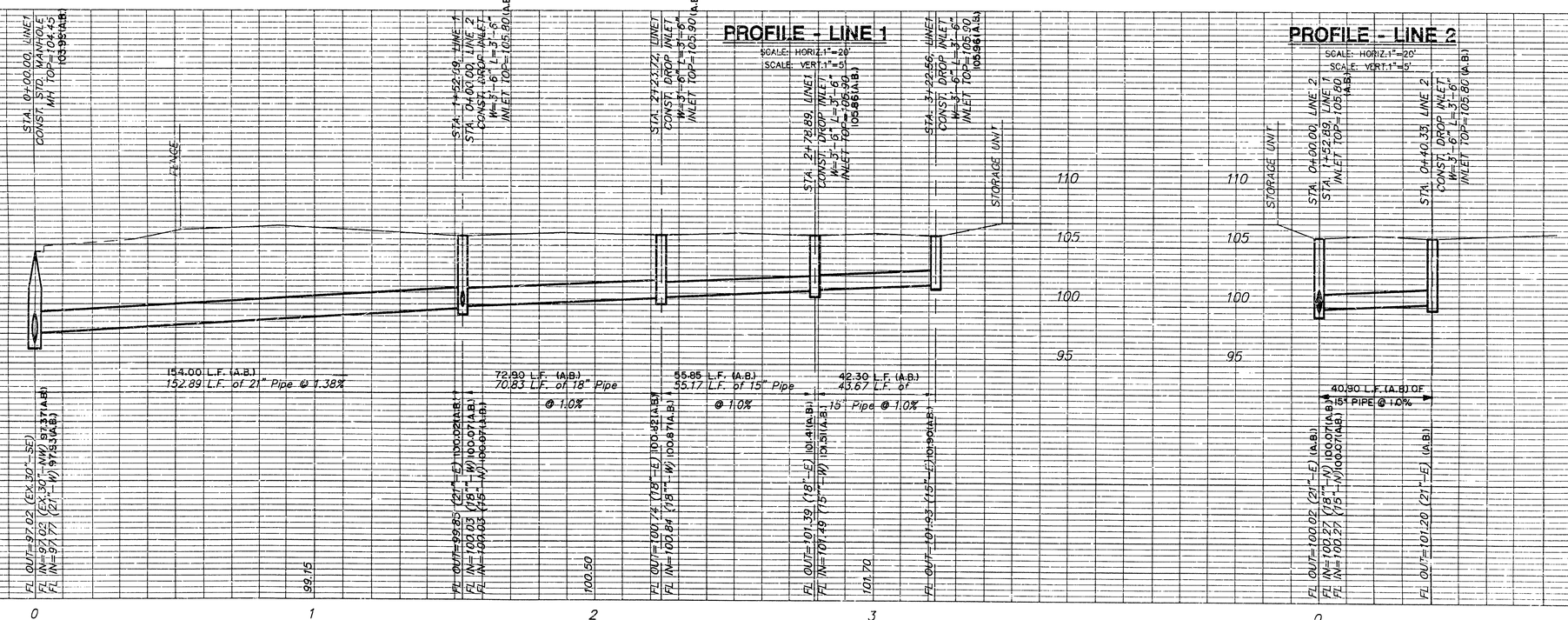


## PROFILE - LINE 2

SCALE: HORIZ.1"=20'
SCALE: VERT.1"=5'




4/4

AS BUILT: 3-12-97

94150-D4

PC 44-3

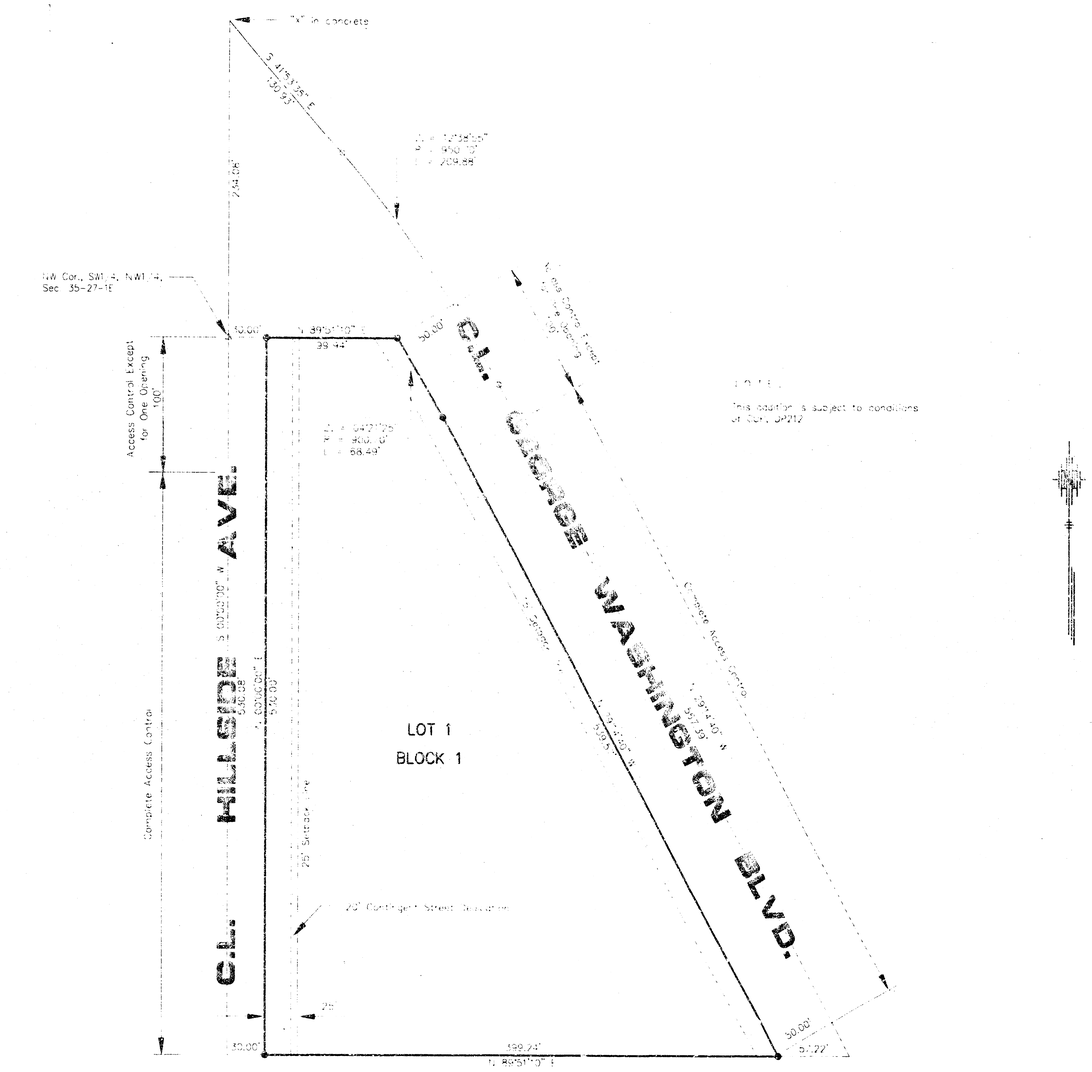


NOTE:
This addition is subject to conditions of CUP, UP212

SCALE 1" = 50'

# GEORGE WASHINGTON STORAGE ADDITION

## TO WICHITA, SEDGWICK COUNTY, KANSAS

20.00 cA

**STATE OF KANSAS, COUNTY OF SEDGWICK: ss.**

I, Kenny E. Hill, being a duly licensed Land Surveyor in said County and State, do hereby certify that I have been in responsible charge of surveying and platting "GEORGE WASHINGTON STORAGE ADDITION" to Wichita, Kansas, being described as follows:

A replat of part of Crown Point Addition located in the West Half of the Northwest Quarter of Section 35, Township 27 South, Range 1 East of the 6th P.M. Sedgwick County, Kansas, more particularly described as follows:

Beginning at a point 30.00 feet East of the Northwest corner of the Southwest Quarter of the Northwest Quarter of said Section 35; said point being on the east line of Hillside Avenue at the centerline of St. Francis Avenue as platted in Crown Point Addition to Wichita, Sedgwick County, Kansas; thence S00°00'00"W for a distance of 530.00 feet on the East line of Hillside Avenue; thence N89°51'10"E for a distance of 399.24 feet on the North line of Krack's 4th and 5th Addition to Wichita, Sedgwick County, Kansas to a point on the West right-of-way line of George Washington Boulevard; thence N29°14'40"W for a distance of 539.57 feet along the West right-of-way line of George Washington Boulevard, thence on a circular curve to the left having a radius of 900.70 feet and a central angle of 04°21'25" an arc distance of 68.49 feet along the West right-of-way line of George Washington Boulevard; thence S89°51'10"W for a distance of 99.94 feet to the point of beginning; containing 3.05 acres more or less.

The accompanying plat is a true and correct exhibit of property surveyed

Dated this 7TH day of MARCH, 1994.

Kenny E. Hill

**KNOW ALL MEN BY THESE PRESENTS:**

That I, the undersigned, have caused the land described in the Surveyor's Certificate to be platted into a lot and a Block. The 20 foot contingent street dedication adjacent to Hillside Avenue is subject to the City's need for the right-of-way to provide for street or street related improvements. All abutters' rights of access to or from Hillside or George Washington Boulevard over and across the East or West line of Lot 1, Block 1 except for one opening in the North 100 feet of Lot 1, Block 1, are hereby granted to the appropriate governing body. Vacation of previously dedicated right-of-way or easements is by virtue of K.S.A. 12-512(b).

T.F.C. Development, Inc.

Keith L. Anderson, President

**STATE OF KANSAS, COUNTY OF SEDGWICK: ss.**

This instrument was acknowledged before me on this 7th day of March, 1994, by Keith L. Anderson, President of T.F.C. Development, Inc.

Carol R. Barnes
Notary Public

My Appointment Expires: 4-25-96

This plat of GEORGE WASHINGTON STORAGE ADDITION to Wichita, Kansas has been submitted to and approved by this WICHITA-SEDGWICK COUNTY METROPOLITAN AREA PLANNING COMMISSION, Wichita, Kansas.

Dated this 13th day of January, 1994

WICHITA SEDGWICK COUNTY METROPOLITAN AREA PLANNING COMMISSION

James D. Miner, Chairman

Marvin S. Krout, Secretary

# 1381501

This plat approved and all dedications shown hereon accepted by the City Council of the City of Wichita, Kansas, this 26 day of APRIL, 1994.

Elma Broadfoot, Mayor

Pat Burnett, Deputy City Clerk

Entered on transfer record this 10th day of MAY, 1994.

for Susan E. Crockett-Spoon, County Clerk
Brent W. Shelton

This is to certify that this instrument was filed for record in the Register of Deeds Office at 10:00 A.M.-P.M. on the 11th day of MAY, 1994.

Pat Kettler, Register of Deeds
by
Ed Resa, Chief Deputy

4-1-1-91

PC 44-3