## GENERAL NOTES

1. Contractor will be required to provide notice to utility companies a minimum of twenty-four (24) hours prior to any excavation as follows:

   Kansas One-Call 687-2470

2. Existing utilities and their locations as shown on the plans represent the best information obtainable for design. Location information has been obtained from the various utility companies and is either from company records or company field-provided locations. The Contractor will be required to work around existing utilities which do not conflict with proposed construction.
3. The Contractor is to verify utility locations prior to construction for this project.
4. Traffic will not be affected by the construction of this project.
5. All disturbed areas shall be seeded with Rebel II fescue at the rate of 300 lbs. per acre. Fertilizer (13-13-13) shall be applied at the rate of 100 lbs. per acre.
6. Lines 1 for this project is to be privately maintained.

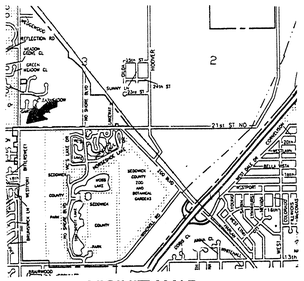


VICINITY MAP

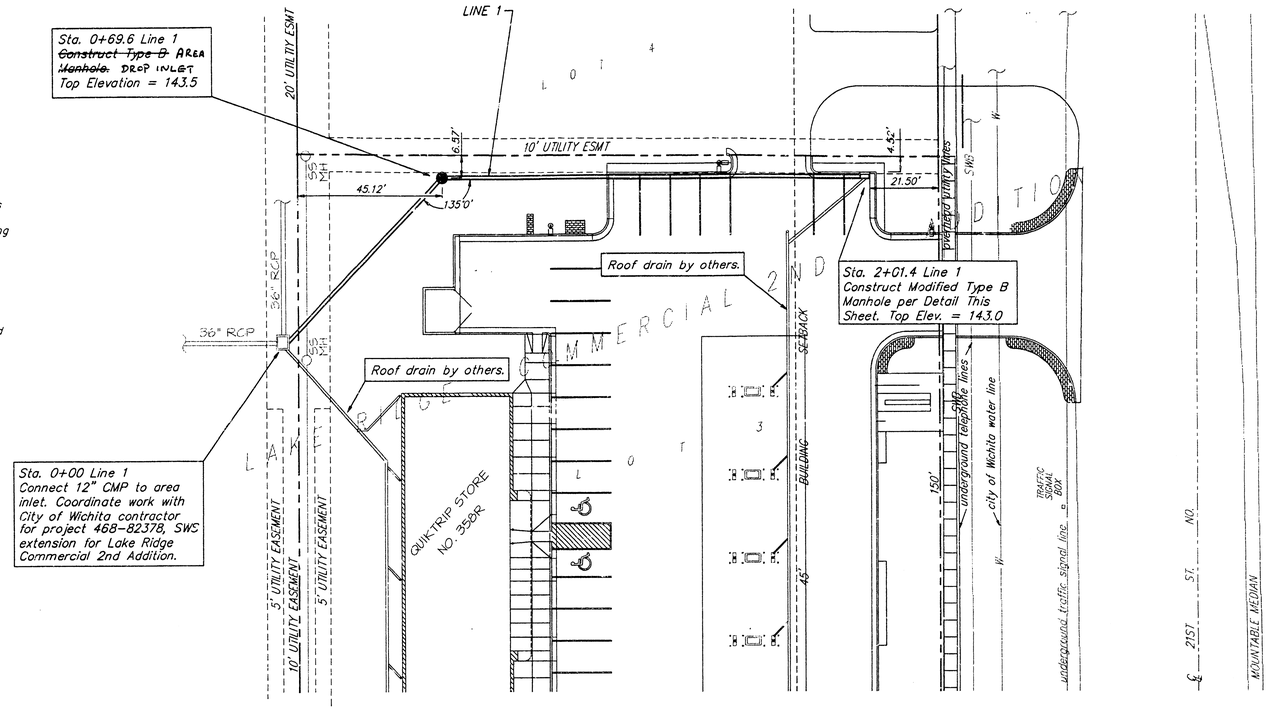


SCALE: 1" = 20' Horz.
1" = 5' Vert.

BENCHMARK:
R.R. SPIKE IN P.P. 75' NORTH & 58' EAST OF CENTERLINES OF BOTH 21ST ST. AND RIDGE ROAD.
ELEVATION = 143.30 CITY DATUM

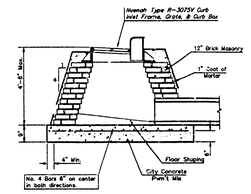


MODIFIED SPECIAL SHALLOW TYPE "B" MANHOLE

INSPECTOR: LYLE POWERS
BAUGHMAN CO.

ASBUILT: 2/10/97 JEFF BRADLEY
BAUGHMAN CO.

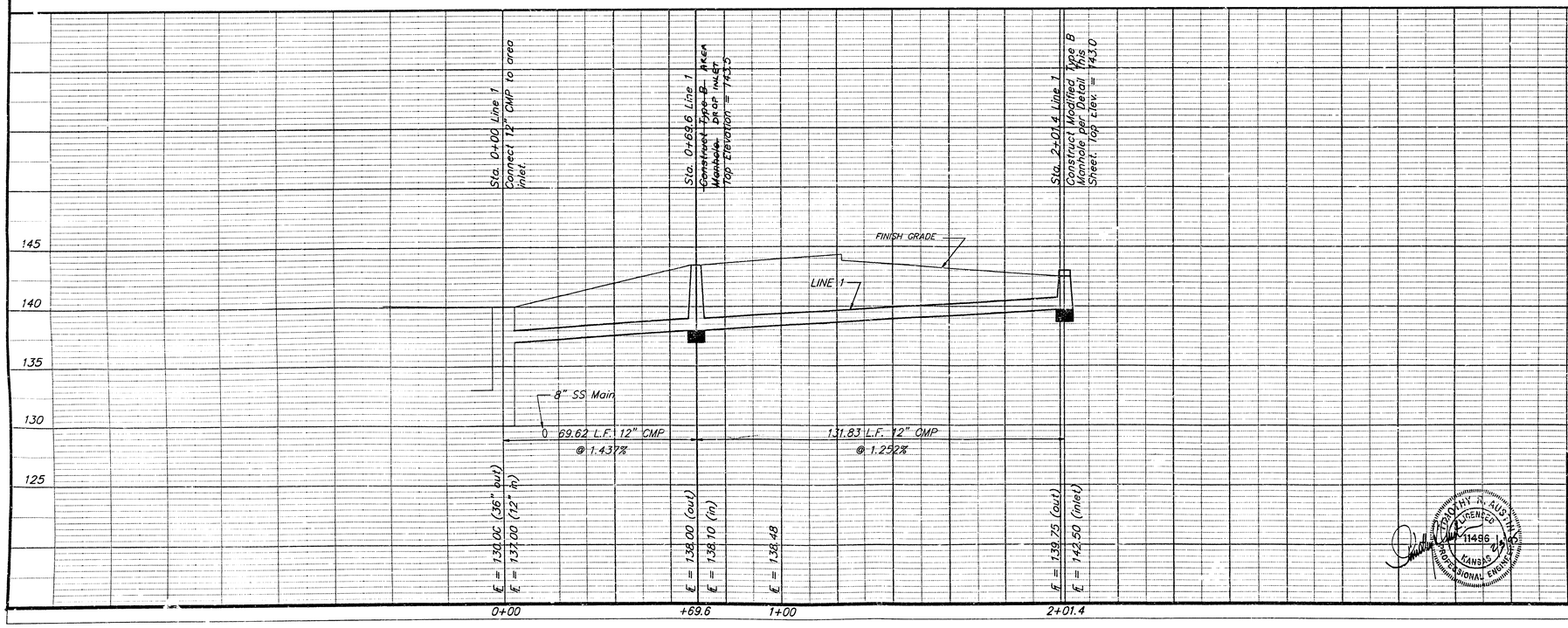


APPROVED AS NOTED
BY CITY ENGINEER OF WICHITA

Sanitary Sewers _____
Storm Sewers VRH 2/3/95
Driveway Approaches _____
Water Mains _____
Paving _____

NOTE TO CONTRACTORS

Inspection and testing for this project is to be provided by a Licensed Consulting Engineering Firm under contract with the Owner/Developer. Said Inspection to be in accordance with the City of Wichita standard construction engineering practices and certified by a Licensed Professional Engineer. No work shall be performed in dedicated easements or public right-of-way by the Contractor without such inspection nor shall any work be commenced without written authorization by the City Engineer. All Construction and Materials shall comply with the City of Wichita Specifications and Standards (on file and available in the City Engineer's Office).

BOOKED 5-6-97 MCL 2 D-2508

TERRY N. AUSTIN
11486
KANSAS
PROFESSIONAL ENGINEER

LAKE RIDGE COMM. 2ND. ADDITION
# SWS EXTENSION
QUIKTRIP#358R

BAUGHMAN COMPANY P.A.
ENGINEERING, SURVEYING, & PLANNING
316-262-7271 • 315 ELLIS • WICHITA, KANSAS 67211

| PROJECT NUMBER | | | | SHEET |
|---|---|---|---|---|
| 532PPS(607861) | | | | 1 OF 2 |
| DESIGN | DRAWN | APPROVED | DATE | SCALE |
| TA | | | JAN.95 | NOTED |

01358PLTWG

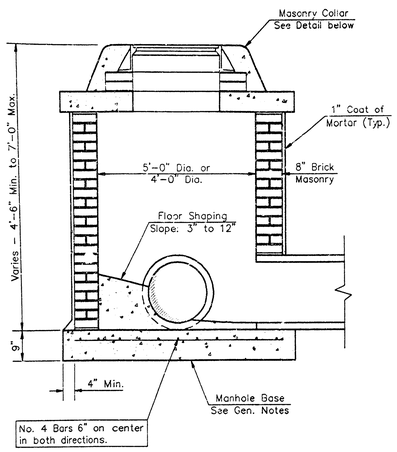


## SHALLOW TYPE "A" MANHOLE

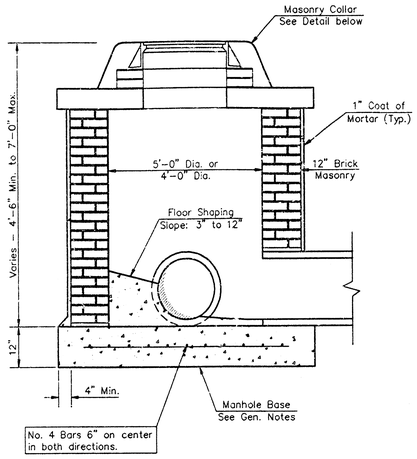


## SHALLOW TYPE "B" MANHOLE

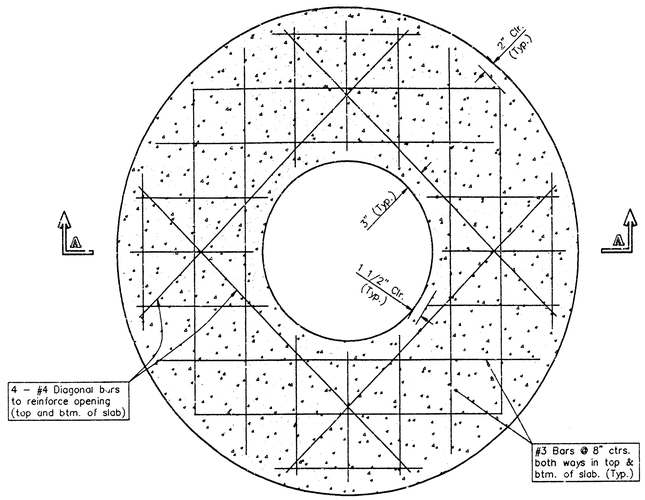


## PLAN

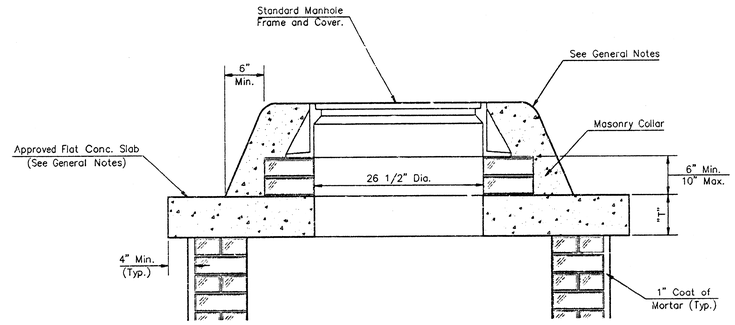


## MASONRY COLLAR DETAIL

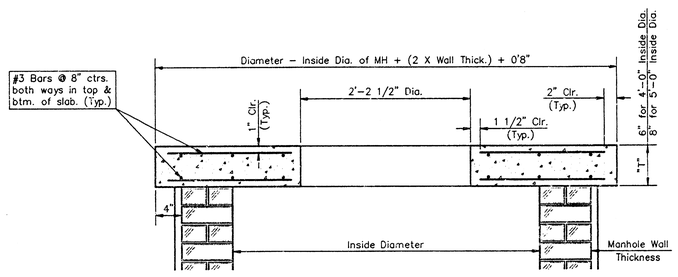


## SECTION A-A

## FLAT CONCRETE SLAB DETAILS

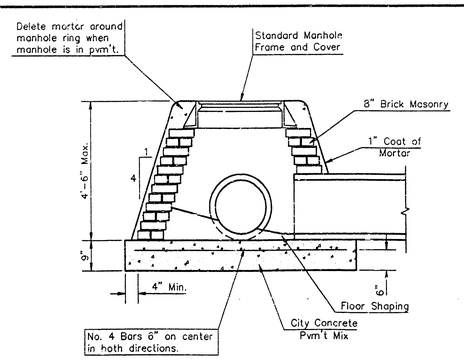


## SPECIAL SHALLOW TYPE "A" MANHOLE

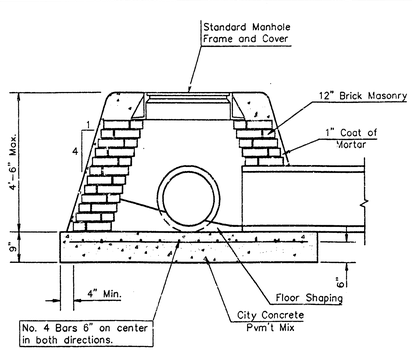


## SPECIAL SHALLOW TYPE "B" MANHOLE

## GENERAL NOTES

1. Mortar used in masonry construction shall contain 8 sacks of cement per cubic yard. Concrete used in manhole bases shall conform to the requirements of concrete for concrete pavement construction as specified in the city standard paving specifications using city concrete cement mix without air entraining admixture. Mortar shall be placed around the manhole ring as shown on the drawings when manholes are constructed in unpaved areas. Type "A" shallow manholes can be used on sewers when the manhole is not located within public street pavement. Manholes constructed where pipe sizes are smaller than 24" shall have an inside diameter of 4'. Manholes constructed where pipe sizes are 24" or larger shall have an inside diameter of 5'. Completed manhole shall be without leaks and water tight.

2. Reinforcing steel shall be installed in the manhole bases and shall consist of no. 4 bars placed on 6" centers in both directions. The manhole base reinforcement shall be placed 6" above the bottom of the manhole base. All costs for furnishing and installing reinforcing steel shall be included in the unit price bid for the manhole.

3. The floors of all manholes shall be shaped with flow channels such that the manholes will be self cleaning and free of areas where solids could be deposited as sewage flows through the manhole from all inlet pipes to the outlet pipe. Flow channels shall be formed to match the bottom halves of the inflowing pipes and the outflowing pipe as shown by the drawings. Manhole floors shall have slopes of 3 inches per foot in the areas outside of the flow channels sloped toward the flow channels. Pipes laid through manholes shall have the top half removed to neat lines for the full inside diameter of the manhole. Manhole floors shall then be shaped around the bottom half of the pipe which forms the flow channel.

4. Pipes installed within the excavation made for the manhole shall be cradled with concrete to the limits of the manhole excavation. When clay pipe is used, the cradle shall extend to the first joint outside the manhole. The cradle shall be terminated at the clay pipe joint in a manner which will maintain the flexibility of the joint. Cost of cradle within manhole excavation or to clay pipe joints adjacent to manhole shall be included in the unit price bid for the manhole.

5. Manhole cover castings and manhole frame castings shall conform to the requirements as indicated in the standard specifications and as shown in the standard detail drawings.

6. The crowns of inflowing pipes shall never be set lower than the crown of the outflowing pipe.

7. Standard shallow manholes type "A" and "B" shall be paid for at the unit price bid per each for the type and diameter indicated. Standard special shallow manholes type "A" and "B" shall be paid for at the unit price bid per each for the type indicated. All standard shallow manhole diameters will be 4' unless indicated otherwise.

8. All brick used in manhole construction shall meet Grade SW of ASTM C652 or C62-87.

CITY OF WICHITA, KANSAS

# STANDARD SHALLOW MANHOLES

## TYPE 'A' AND TYPE 'B'

PROJECT NUMBER

SHEET 2 OF 2

BAUGHMAN COMPANY P. A.
ENGINEERING & SURVEYING
316/262-7271 • 315 ELLIS • WICHITA, KANSAS 67211

DETAIL\SHLMAN.DWG