STORM WATER SEWER EXTENSIONS TO SERVE

STERLING FARMS 5TH ADDITION
MINER MIKE'S ADVENTURE ZONE

Private Project Number

568 PPS (607861)

CITY OF WICHITA, KANSAS
Michael E. Lindebak City Engineer

INDEX:

1. Title Sheet
2. Line 1
3. Line 1
4. Line 2
5. Standard Type 1A Inlet Details
6. Standard Drop Inlet Details
7. Copy of Plat

General Notes

1. Contractor will be required to provide notice to utility companies a minimum of twenty-four (24) hours prior to any excavation, as follows:

   Kansas One-Call 687-2470

   The Contractor must notify the following in case of an emergency:

Cablevision	262-4270
or	263-2061
K.P.L. Gas Service Company	383-8650
Kansas Gas & Electric Company	383-8600
Arkla Gas Company	942-8350
Southwestern Bell Telephone Company	1-571-2611
City of Wichita Water Department	268-4908
City of Wichita Sewer Maintenance	268-4071

2. Underground utility service lines and overhead utility pole lines are to be adjusted as necessary by others prior to construction unless the plans specifically call for their adjustment by the Contractor or unless the plans specifically identify a utility to be adjusted by its owner during construction. Existing utilities and their location, as shown on the plans, represent the best information obtainable for design. Location information has been obtained from the various utility companies and is either from company record drawings or company provided field locations. The Contractor will be required to work around existing utilities within the right-of-way which do not conflict with proposed construction.

3. Rubble from the removal of miscellaneous structures and excess excavation which is to be wasted shall be disposed of on sites to be provided by the Contractor. These sites shall be approved by the Engineer as to suitability, appearance and site location. Locations that, in the opinion of the Engineer, will leave an unsightly appearance will not be approved.

4. Trees and shrubs in public right-of-way which are in direct conflict with proposed new construction shall be removed by the Contractor with the Engineer's approval. Trees and shrubs which are not in direct conflict with proposed new construction shall be saved and protected from damage.

5. The Contractor shall give all property owners and/or tenants of developed property directly abutting the construction of this project a minimum of ten (10) days advance notice prior to start of construction.

6. The Contractor shall be responsible for preserving property irons. The Contractor will be required to re-establish any property irons which are damaged or destroyed by his construction operations. Such irons shall be re-established by a licensed land surveyor in accordance with state law.

7. The Contractor shall seed all areas disturbed by construction operations as per City of Wichita Specifications for temporary seeding.

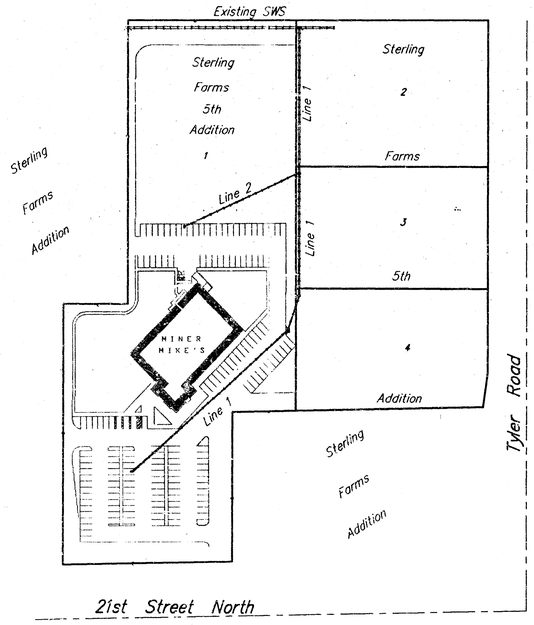

Scale: 1" = 100'

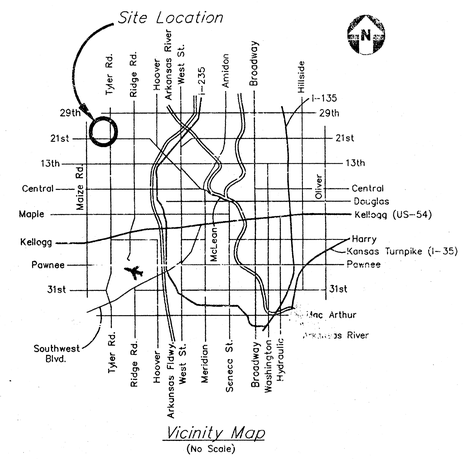

Vicinity Map
(No Scale)

APPROVED AS NOTED
BY CITY ENGINEER OF WICHITA

Sanitary Sewers _____

Storm Sewers VRH 6/29/95

Driveway Approaches _____

Water Mains _____

Paving _____

NOTE TO CONTRACTORS

Inspection and testing for this project is to be provided by a Licensed Consulting Engineering Firm under contract with the Owner/Developer. Said inspection to be in accordance with the City of Wichita standard construction engineering practices and certified by a Licensed Professional Engineer. No work shall be performed in dedicated easements or public right-of-way by the Contractor without such inspection nor shall any work be commenced without written authorization by the City Engineer. All Construction and Materials shall comply with the City of Wichita Specifications and Standards (on file and available in the City Engineer's Office).



6/29/95

BAUGHMAN COMPANY P.A.
ENGINEERING, SURVEYING, & PLANNING
316-262-7271 • 315 ELLIS • WICHITA, KANSAS 67211

BENCHMARK:

City of Wichita Benchmark located 73.6' North and 53.3' East of the Intersection of the Center lines of Tyler and 21st Street North. Elevation = 170.95 City Datum

SCALE:
1"=20' Horizontal
1"=5' Vertical
= Iron

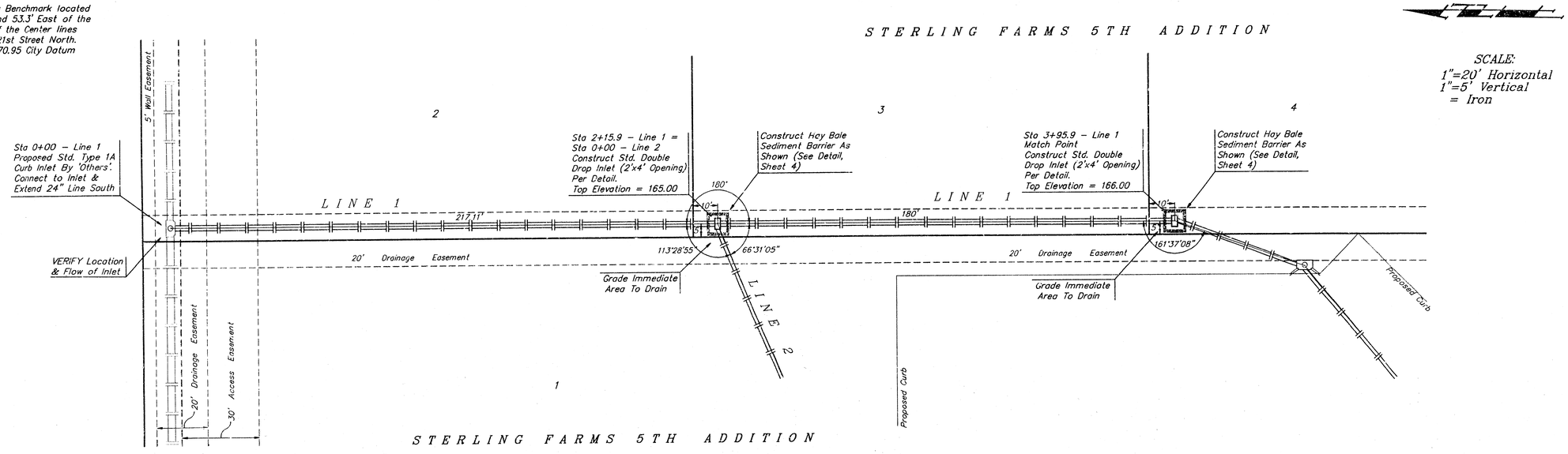

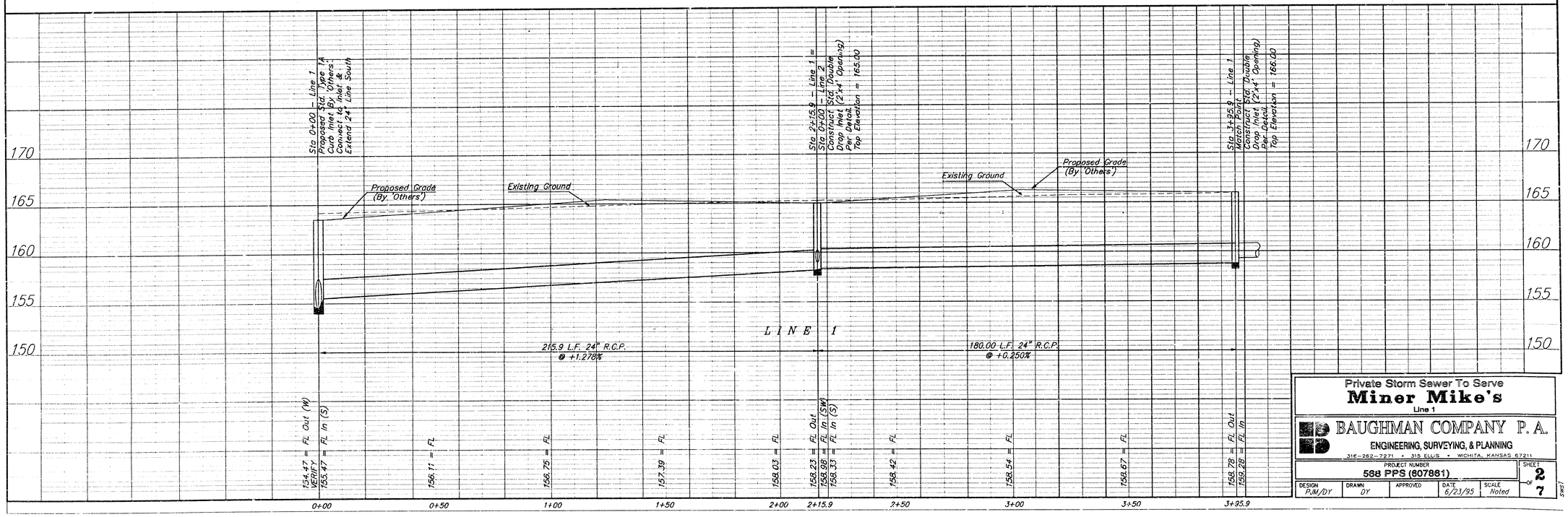

Private Storm Sewer To Serve
Miner Mike's
Line 1

BAUGHMAN COMPANY P. A.
ENGINEERING, SURVEYING, & PLANNING
316-262-7271 • 315 ELLIS • WICHITA, KANSAS 67211

PROJECT NUMBER	SHEET
588 PPS (607881)	2 OF 7

DESIGN	DRAWN	APPROVED	DATE	SCALE
PJM/DY	DY		6/23/95	Noted

SW57

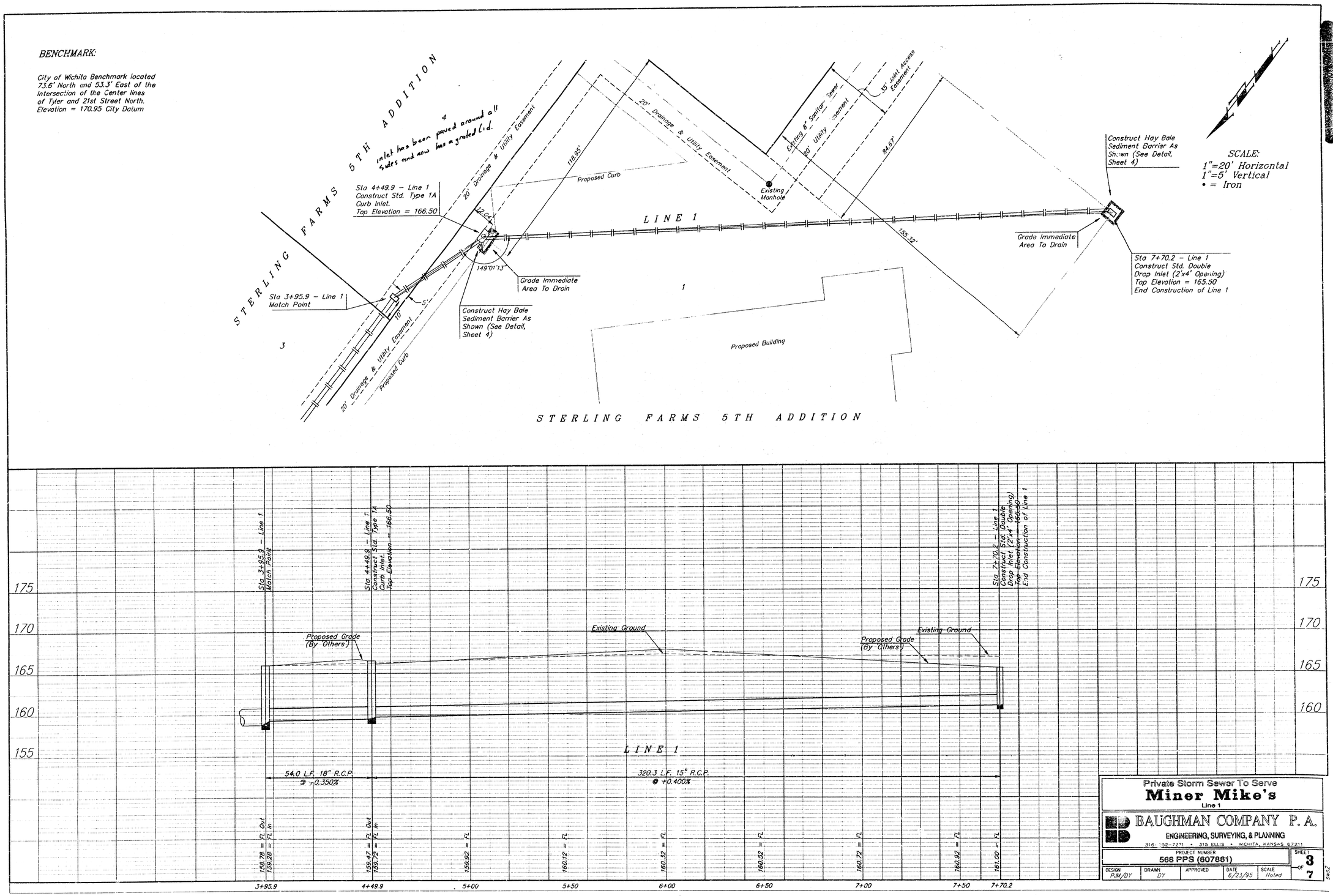

Private Storm Sewer To Serve
Miner Mike's
Line 1

BAUGHMAN COMPANY P. A.
ENGINEERING, SURVEYING, & PLANNING
316-[illegible]32-7271 • 315 ELLIS • WICHITA, KANSAS 67211

PROJECT NUMBER					SHEET
568 PPS (607861)					3 OF 7
DESIGN	DRAWN	APPROVED	DATE	SCALE	
PJM/DY	DY		6/23/95	Noted	

BENCHMARK:

City of Wichita Benchmark located 73.6' North and 53.3' East of the Intersection of the Center lines of Tyler and 21st Street North. Elevation = 170.95 City Datum

STERLING FARMS 5TH ADDITION

4

3

1

LINE 1

20' Drainage & Utility Easement

Proposed Curb

Sta 0+00 – Line 2 = Sta 2+15.9 – Line 1 Begin Construction of 15" RCP

66°31'05"

113°28'54"

LINE 2

Sta 1+96.0 – Line 2 Construct Std. Double Drop Inlet (2'x4' Opening) Top Elevation = 164.00

Flow = 160.00 (PVC Pipe)

Grade Immediate Area To Drain

Construct Hay Bale Sediment Barrier As Shown (See Detail, This Sheet).

Install 124 L.F. 12" PVC Pipe as Shown. Cap End & Mark Location With Steel Fence Post

Proposed Building

Flow = 160.50

35'

15'

15'

Non-Exclusive Easement

114.80'

87.25'

STERLING FARMS ADDITION

STERLING FARMS 5TH ADDITION

SCALE:
1"=20' Horizontal
1"=5' Vertical
• = Iron

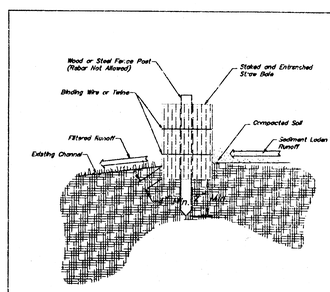

Straw Bale Barrier Detail

175
170
165
160
155
150

Sta 0+00 – Line 2 = Sta 2+15.9 – Line 1 Begin Construction of 15" RCP

Sta 1+96.0 – Line 2 Construct Std. Double Drop Inlet (2'x4' Opening) Top Elevation = 164.00

Existing Ground

Proposed Grade (By Others)

LINE 2

196.0 L.F. 15" R.C.P. @ +0.400%

158.23 = FL Out (N)
158.33 = FL In (S)
158.98 = FL In (SW)

159.18 = FL

159.38 = FL

159.58 = FL

156.76 = FL Out
160.01 = 12" PVC FL

0+00 0+50 1+00 1+50 1+96.0

Private Storm Sewer To Serve
Miner Mike's
Line 2

BAUGHMAN COMPANY P. A.
ENGINEERING, SURVEYING, & PLANNING
316-262-7271 • 315 ELLIS • WICHITA, KANSAS 67211

PROJECT NUMBER	SHEET
588 PPS (607861)	4 OF 7

DESIGN	DRAWN	APPROVED	DATE	SCALE
PJM/DY	DY		6/23/95	Noted

5963

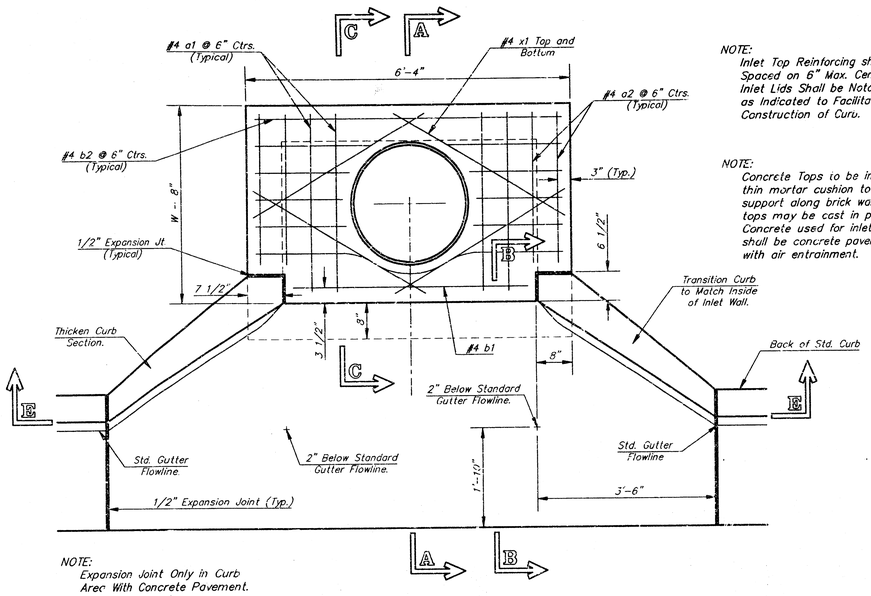

NOTE:
Expansion Joint Only in Curb Area With Concrete Pavement.

PLAN

NOTE:
Inlet Top Reinforcing shall be Spaced on 6" Max. Centers. Inlet Lids Shall be Notched Out as Indicated to Facilitate Construction of Curb.

NOTE:
Concrete Tops to be installed on thin mortar cushion to insure full support along brick walls. Concrete tops may be cast in place or precast. Concrete used for inlet construction shall be concrete pavement mix with air entrainment.

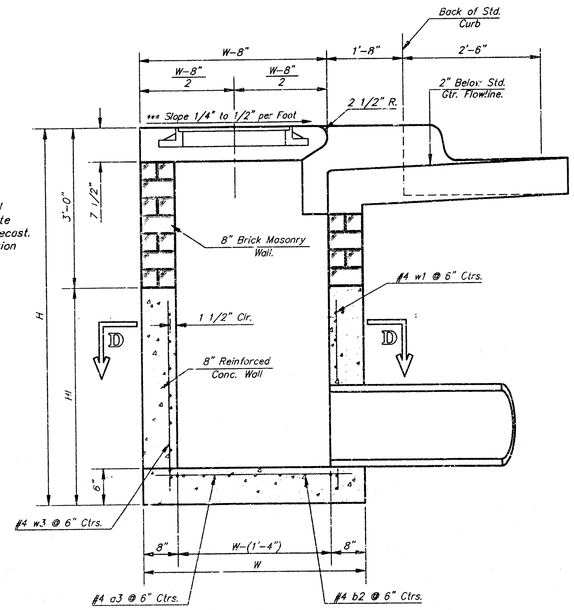

SECTION A-A

***NOTE: Slope of inlet tops to Match Sidewalk or Parking Slopes within Limits Indicated.

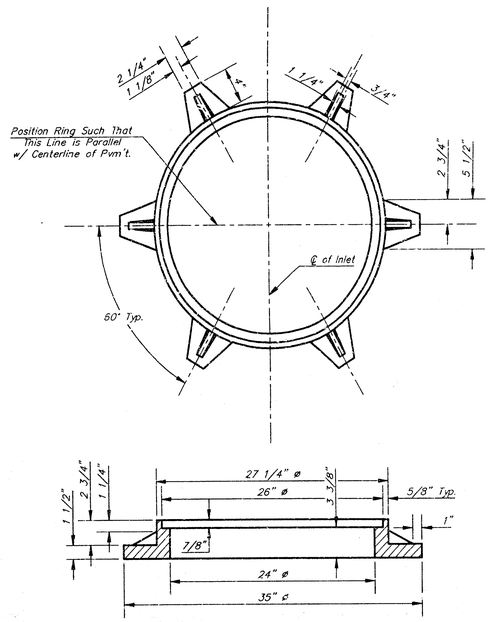

MANHOLE RING AND COVER

Weight = 180 Lbs.

*See City of Wichita Standard Manhole Ring and Cover Detail Sheet for Cover Details to Be Used With Inlet Frame.

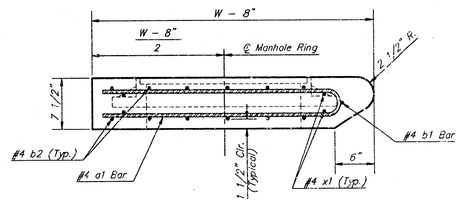

SECTION A-A

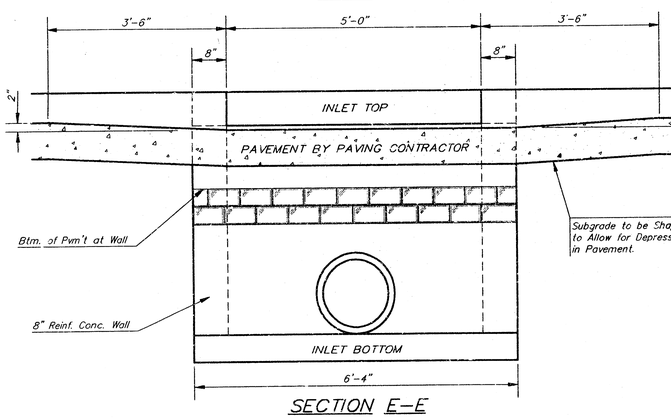

SECTION E-E

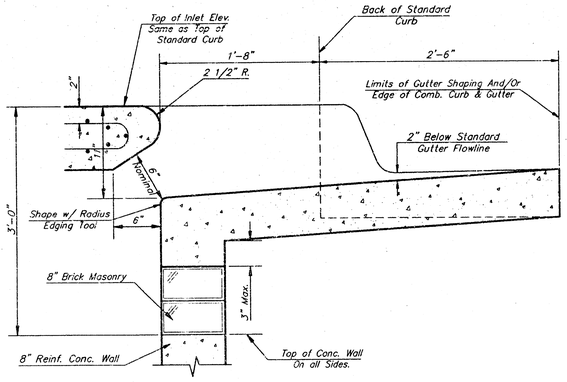

SECTION B-B

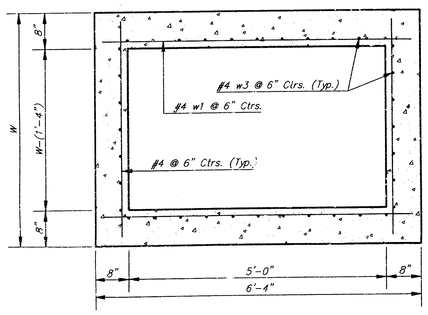

SECTION D-D

NOTE: Contractor shall have the option of constructing 8" brick masonry walls between the concrete inlet base and top on this inlet when W=6'-4" and H=7'-0" or less.

Additional curb and gutter construction necessary to connect set-back inlet to pavement will be paid for at the unit price bid for each inlet hookup.

Inlet invert shall be shaped with 8 sack sand mix concrete to create flow channels and to increase hydraulic efficiency such that the inlet will be self-cleaning between all inlet and/or outlet pipes.

The ends of all pipes installed in inlets shall be cut off flush with the inside face of the inlet wall

PRECAST SLAB AND FLOOR REINFORCING

		W = 4'-4"		W = 5'-4"		W = 6'-4"		W = 7'-4"		W = 8'-4"	
MARK	SIZE	NO.	LENGTH	NO.	LENGTH	NO.	LENGTH	NO.	LENGTH	NG.	LENGTH
* a1	#4	6	6'-7"	6	8'-7"	6	10'-7"	6	12'-7"	6	14'-7"
a2	#4	4	6'-0"	4	8'-0"	4	10'-0"	4	12'-0"	4	14'-0"
a3	#4	13	4'-1"	13	5'-1"	13	6'-1"	13	7'-1	13	8'-1"
b1	#4	1	4'-9"	1	4'-9"	1	4'-9"	1	4'-9"	1	4'-9"
* b2	#4	23	6'-1"	29	6'-1"	35	6'-1"	41	6'-1"	47	6'-1"
x1	#4	8	3'-10"	8	4'-2"	8	4'-6"	8	4'-10"	8	5'-2"

WALL REINFORCING

		W = 4'-4"		W = 5'-4"		W = 6'-4"		W = 7'-4"		W = 8'-4"	
MARK	SIZE	NO.	LENGTH	NO.	LENGTH	NO.	LENGTH	NO.	LENGTH	NO.	LENGTH
w1	#4	①	6'-1"	①	6'-1"	①	6'-1"	①	6'-1"	①	6'-1"
w2	#4	①	4'-1"	①	5'-1"	①	6'-1"	①	7'-1"	①	8'-1"
w3	#4	32	②	36	②	40	②	44	②	48	②

* Field Bend or Cut Reinforcing as Required for Clearance.

① 4 (Hi - 12") (Hi - 2!") Rounded down to nearest 0.5'

② Hi - 3"

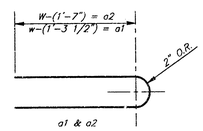

BENDING DIAGRAM

STANDARD CURB INLET PRECAST TOPS

W	PRE-CAST TOP SIZE	PIPE SIZE	CU. YD. CONC.
4'-4"	3'-8" x 6'-4" x 7 1/2"	21" & SMALLER	0.38±
5'-4"	4'-8" x 6'-4" x 7 1/2"	24" & 30"	0.51±
6'-4"	5'-8" x 6'-4" x 7 1/2"	36" & 42"	0.64±
7'-4"	6'-8" x 6'-4" x 7 1/2"	48" & 54"	0.77±
8'-4"	7'-8" x 6'-4" x 7 1/2"	60" & 66"	0.90±

Revised - Feb. 16, 1989

CITY OF WICHITA STANDARD TYPE 1A

Curb Inlet Details

INLET OPENING = 8" x 5'-0"

BAUGHMAN COMPANY P. A.

ENGINEERING, SURVEYING, & PLANNING

316-262-7271 • 315 ELLIS • WICHITA, KANSAS 67211

PROJECT NUMBER	SHEET
568 PPS (607861)	5 of 7

DESIGN	DRAWN	APPROVED	DATE	SCALE
C.O.W.	Staff			None

jp14-5

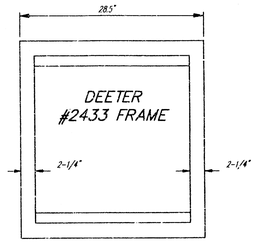

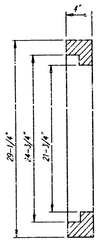

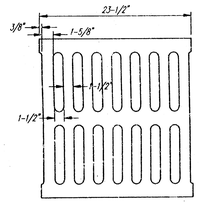

DEETER #2433 GRATE

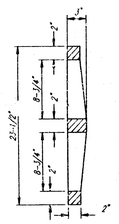

NOTE: Grates shall be imprinted on the top surface with "CITY OF WICHITA" using letters at least 1" in height. Other marking methods may be approved by the engineer.

24" x 24" Frame and Grate Detail

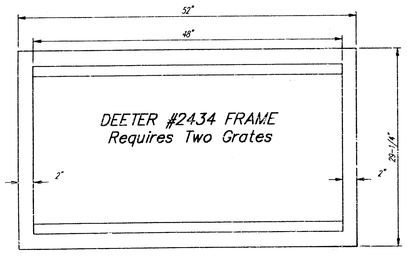

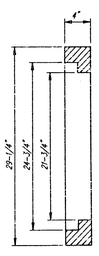

Double 24" x 24" Frame Detail

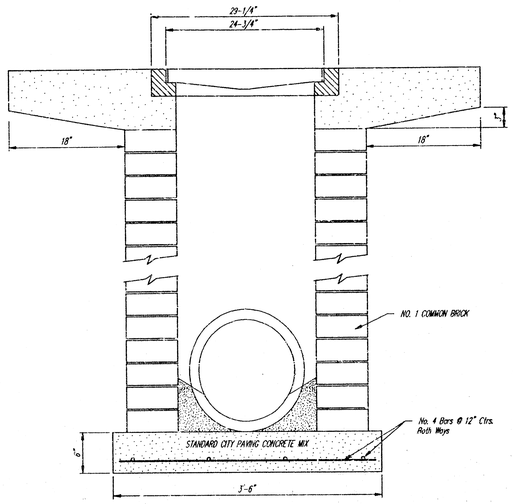

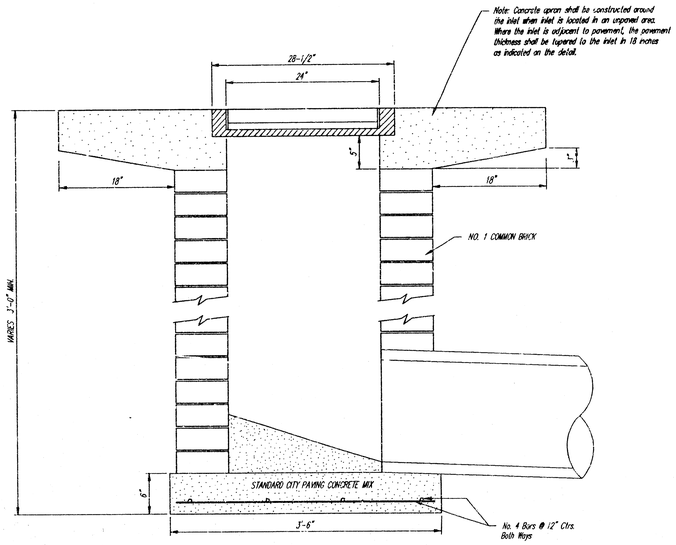

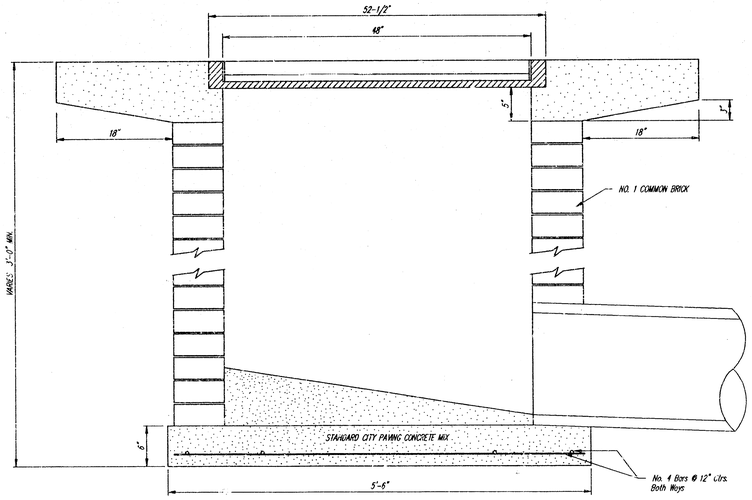

City of Wichita Standard

Standard Drop Inlet

Details

BAUGHMAN COMPANY P. A.
ENGINEERING, SURVEYING, & PLANNING
316-262-7271 • 315 ELLIS • WICHITA, KANSAS 67211

PROJECT NUMBER	SHEET
568 PPS (607861)	6 OF 7

DESIGN	DRAWN	APPROVED	DATE	SCALE
C.O.W.	Staff			None

DETAILS \ DRAWING 1

STERLING FARMS 5TH ADDITION

WICHITA, SEDGWICK COUNTY KANSAS

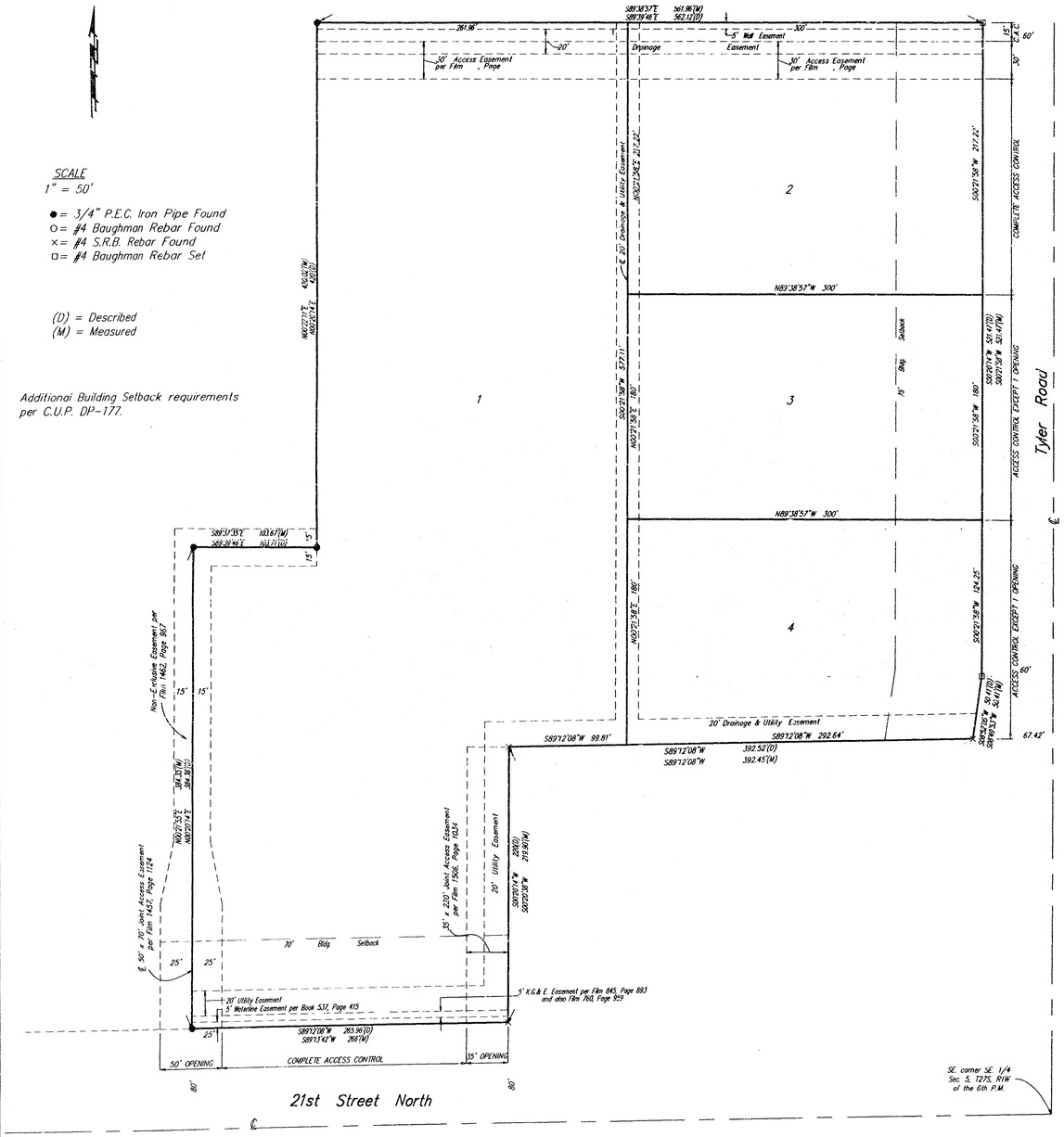

SCALE
1" = 50'

● = 3/4" P.E.C. Iron Pipe Found
○ = #4 Baughman Rebar Found
× = #4 S.R.B. Rebar Found
□ = #4 Baughman Rebar Set

(D) = Described
(M) = Measured

Additional Building Setback requirements per C.U.P. DP-177.

State of Kansas)SS
County of Sedgwick)

We, Baughman Company P.A., Surveyors in aforesaid county and state do hereby certify that we have surveyed and platted "STERLING FARMS 5TH ADDITION" to Wichita, Sedgwick County, Kansas, and that the accompanying plat is a true and correct exhibit of the property surveyed, described as and being a replat of part of Lot 4, Block 6, Sterling Farms, an Addition to Wichita, Sedgwick County, Kansas, and further described as follows: Beginning at the NE corner of Lot 4, Block 6, Sterling Farms, an Addition to Wichita, Sedgwick County, Kansas; thence bearing S00°20'14"W along the east line of said Lot 4 a distance of 521.47 feet; thence bearing S08°52'05"W a distance of 50.41 feet to the NE corner of Lot 6 in said Block 6; thence bearing S89°12'08"W a distance of 392.52 feet to the NW corner of Lot 5 in said Block 6; thence bearing S00°20'14"W a distance of 220.00 feet to the SW corner of said Lot 5 and to a point in the south line of said Lot 4; thence along said south line bearing S89°12'08"W a distance of 265.96 feet; thence bearing N00°20'14"E a distance of 384.36 feet; thence bearing S89°39'46"E a distance of 103.71 feet; thence bearing N00°20'14"E a distance of 420 feet to a point in the north line of said Lot 4; thence bearing S89°39'46"E along said north line a distance of 562.12 feet to the point of beginning.

All being situated in the SE. 1/4 of Sec. 5, T27S, R1W of the 6th P.M., Sedgwick County Kansas.

Existing public easements being vacated by virtue of KSA 12-512(a)

Baughman Company, P.A.

_____ Surveyor
Gregory F. Severns

Know all men by these presents that we, the undersigned owners, have caused the land described in the surveyors certificate to be platted into Lots to be known as "STERLING FARMS 5TH ADDITION", Wichita, Sedgwick County, Kansas. The utility easements are hereby granted as indicated for the construction and maintenance of all public utilities. The wall easement is hereby granted as indicated for the construction and maintenance of a private wall and utilities are allowed to cross this easement. The drainage easement is hereby granted as indicated for drainage purposes. The drainage and utility easements are hereby granted as indicated for drainage purposes and for the construction and maintenance of all public utilities. All abutters rights of access to or from 21st Street North over and across the south line of Lot 1 except the east 35 feet thereof, and except the west 25 feet thereof are hereby granted to the City of Wichita, Kansas. All abuiters rights of access to or from Tyler Road over and across the east line of Lot 2 except the south 30 feet of the north 45 feet thereof, are hereby granted to the City of Wichita, Kansas. All abutters rights of access to or from Tyler Road over and across the east line of Lots 3 and 4 are hereby granted to the City of Wichita provided, however, that said Lots 3 and 4 shall have access to Tyler Road at one location each, as shall be determined by the City Engineer of the City of Wichita, Kansas.

Kessler Enterprises, a Trust

_____ Co-Trustee
Lucille Meyer

_____ Co-Trustee
William J. Walsh, Jr.

Miner Mike's Adventure Zone, Inc.

_____ Executive Vice-President/
Patrick J. Kelly General Manager

State of Kansas)SS
County of Sedgwick)

The foregoing instrument acknowledged before me, this ___ day of _____, 1995, by Patrick J. Kelly, Executive Vice-President/General Manager, Miner Mike's Adventure Zone, Inc., on behalf of the corporation.

_____ Notary Public

My App't. Exp. _____

This plat of "STERLING FARMS 5TH ADDITION", Wichita, Sedgwick County, Kansas, has been submitted to and approved by the Wichita-Sedgwick County Metropolitan Area Planning Commission, Wichita, Kansas.

Dated this ___ day of _____, 1995.

Wichita-Sedgwick County Metropolitan Area Planning Commission.

_____ Chairman
John W. McKay, Jr.

_____ Secretary
Marvin S. Krout

This plat approved and all dedications shown hereon accepted by the City Council of the City of Wichita, Kansas, this ___ day of _____, 1995.

_____ Mayor
Bob Knight

_____ Deputy City Clerk
Pat Burnett

Entered on transfer record this ___ day of _____, 1995.

_____ County Clerk
Susan E. Crockett-Spoon

State of Kansas) SS
Sedgwick County)

This is to certify that this plat has been filed for record in the office of the Register of Deeds, this ___ day of _____, 1995, at ___ o'clock __M; and is duly recorded.

_____ Register of Deeds
Pat Kettler

_____ Deputy
Ed Resa

State of Kansas)SS
County of Sedgwick)

The foregoing instrument acknowledged before me, this ___ day of _____, 1995, by Lucille Meyer and William J. Walsh, Jr., Co-Trustees of Kessler Enterprises, a Trust, on behalf of said Trust.

_____ Notary Public

My App't. Exp. _____

7

E-P-S-PT