CAUTION! 12" A.C. Water Main

Remove Curb & Gutter to existing joints and replace as necessary

Saw, remove, & replace 6" Asphalt Conc. parking lot pvmt. as necessary

Sta. 2+78.9 Line 1 = Sta. 0+00 Line 2 Const. Beehive Inlet Top Elev. 185.30 185.53 See Sheet C1.4

See Sheet C1.1 for Site Grading

Install Ea. 20' Sheet Existing (20' Min. Dist. w/ 0.25' Wall Thickness

NOTE: Locating dimensions for Type II Curb Inlets are to center of inside face of front wall

Remove drive approach pavement to exist. joint as necessary. Replace w/ 8" conc.(6x12-4/4 W.W.F.)

CARRIAGE PARKWAY

LINE 1

10' Utility Easement

SE Cor. Lot 1, Carriage Park Care Center Add.

120' 122.7'

LINE 2

Remove & Replace (2) 4" Trees

Relocate Fire Hydrant (See Sheet C1.7

5' Sidewalk Easement

Sta. 0+00 Line 1 Connect to Exist. Curb Inlet Remove & Reshape Invert

Sta. 1+34.70 Line 1 1+39.7 Const. Shallow Type "B" Manhole Top Elev. ~~186.00~~ 185.52 Install ~~139.7~~ 134.7 L.F. 15" RCP (NW) See Sheet C1.3

CAUTION! U.G. Elec. Cable (KG&E) U.G. Telephone (SW Bell) U.G Gas (KG&E) Cable TV Cable

Construct Storm Sewer under concrete retaining wall footing.

1+43.5 Install ~~144~~ 143.5 L.F. 12" RCP including End Sections See Sheet C1.1

PROPOSED BUILDING F.F. ELEV. 197.50

Const. 4'x4'x5" Conc. Apron around Inlet & C pipe outlet

Sta. ~~1+44.0~~ 1+43.5 Line 1 Const. Area Inlet See Landscape Plan for Top Elevation

Top Elev. 191.97

EDGEMOOR

3+01.6 Sta. 3+03.8 Line 2 Const. Type-M Curb Inlet Top Elev. 195.30 See Sheet C1.5 195.84

5+75.6 Sta. 5+78.1 Line 2 Const. Type M Curb Inlet Top Elev. ~~194.29~~ 194.37 See Sheet C1.5

PROJECT LOCATION

VICINITY MAP

T 26 S T 27 S

T 27 S T 28 S

R 2 W R 1 W R 1 E R 2 E

BENCH MARKS:
Elevations are to City Datum.

BM #1 Disc on SE Cor. of Bridge, North approach @ 2nd bridge East of Central & Edgemoor Elev. 178.47

BM #2 "+" cut in centerline of drive South of Sta. 1+34. Elev. 186.16

BM #3 "□" cut in top of curb @ SE Cor. of parking lot near Sta. 1+34. Elev. 187.29

GRID

Scale: PLAN 1" = 40' PROFILE 1" = 40' Horiz. 1" = 5' Vert.

GENERAL NOTES:

1. All areas of public right-of-way disturbed by construction of this project shall be restored in accordance with City of Wichita Administrative Regulation AR78.
2. Irrigation sprinkler system may exist within Carriage Parkway right-of-way. Any such system encountered shall be protected from damage and/or repaired by the Contractor.
3. The Contractor shall maintain one lane of southbound traffic open on Carriage Parkway at all times.
4. The Contractor shall provide a minimum notice of 48 hours to utility companies prior to excavation. Contact Kansas One Call @ 687-2470.
5. The upper 24" of trench backfill under pavement areas shall be compacted to minimum 98% Std. dry Proctor density or at Contractor's option may be backfilled with flowable fill per City of Wichita specifications.
6. All work on this project shall be done in conformance with City of Wichita Standard Specifications for Construction of Storm Sewers.
7. The Contractor shall give all property owners and/or tenants of developed property directly abutting the construction of this project a minimum of ten (10) days advance notice prior to start of construction.
8. The Contractor shall be responsible for preserving property irons. The Contractor will be required to re-establish any property irons which are damaged or destroyed by his construction operations. Such irons shall be re-established by a licensed land surveyor in accordance with state law.

APPROVED AS NOTED BY CITY ENGINEER OF WICHITA

Sanitary Sewers _____

Storm Sewers 9-27-95 VRH

Driveway Approaches _____

Water Mains _____

Paving _____

NOTE TO CONTRACTORS

Inspection and testing for this project are to be provided by a Licensed Consulting Engineering Firm under contract with the Owner/Developer. Said inspection to be in accordance with the City of Wichita standard construction engineering practices and certified by a Licensed Professional Engineer. No work shall be performed in dedicated easements or public right-of-way by the Contractor without such inspection, nor shall any work be commenced without written authorization by the City Engineer.

Revised As Built 10-8-96 TEB
DELETED STEEL CASING (LINE 1) 10-25-95 JCR

BOOKED 7-15-97 MCG D-350

LINE 1

Sta. 0+00 Line 1 Connect to Exist. Curb Inlet

1+38.7 Sta. 1+34.7 Line 1 Const. Shallow Manhole Top Elev. 186.00 185.52

Top 12" Water Line Elev. 180.19

Unspl. Cable TV Unspl. Telephone Line (SW Bell) Unspl. Gas Line (KG&E) Unspl. Elec. Cable (KG&E)

Finish Ground

Existing Ground

2+75.6 Sta. 2+78.9 Line 1 Const. Beehive Manhole Top Elev. 185.30 185.53

Top 12" Water Line Elev. 191.0

FL 6" San. Sewer Elev. 180.14

1+43.5 Sta. ~~1+44.0~~ Line 1 Const. Area Inlet Top Elev. 191.97

185.66 F.L. ~~188.00~~

60 L.F. Steel Casing (20' Min. Dia.)

+26

Exist. 6" San. Sewer

LINE 2

Sta. 0+00 Line 2 Beehive Inlet

Top 8" Water Line Elev. 198.35

FL 4" San. Sewer Elev. 188.13

FL 4" San. Sewer Elev. 188.30

Top 2" Water Line Elev. 189.35

Finish Ground

Existing Ground

3+03.6 Sta. 3+03.8 Line 2 Const. Type-M Curb Inlet Top Elev. 195.30 195.84

5+75.6 Sta. 5+78.1 Line 2 Const. Type-M Curb Inlet Top Elev. ~~194.29~~ 194.37

2+74.0 ~~276.3~~ L.F. 18" RCP @ 0.3% Grade 0.412%

187.10 FL ~~187.92~~

187.92 FL ~~187.60~~

187.82 FL ~~187.60~~

301.6 ~~303.8~~ L.F. 18" RCP @ ~~1.50~~% Grade 1.50%

158.7 ~~134.7~~ L.F. 15" RCP @ 0.43% Grade 0.43%

134.7 ~~133.2~~ L.F. 15" RCP @ 0.34% Grade 0.34%

170.1 ~~169.1~~ L.F. 12" RCP @ ~~2.65~~% Grade 2.00%

130.60 (12"Dia.) FL 191.10 (In) (N.S.)

Sta. 0+00 Line 1 Connect to Exist. Curb Inlet FL ~~194.38~~ 194.97

Sta. 1+34.7 FL ~~186.38~~ 186.00

Sta. 1+39.7 FL ~~186.38~~ 186.00

Sta. 2+74.0 FL ~~186.54~~ 186.10 (Out) FL ~~186.26~~ 186.27 (In)

Sta. 2+78.9 FL ~~186.66~~ 186.49

Sta. 2+75.6 FL ~~186.54~~ 186.19 (15" Out) FL ~~186.34~~ 186.34 (18" In)

Sta. 3+03.6 FL ~~186.66~~ 186.30 (18" Out) FL ~~186.06~~ 186.06 (12" In)

Sta. 1+43.5 FL ~~188.00~~ 187.79 (18" Out) FL ~~188.00~~ 187.79 (18" In)

Sta. 0+00 Line 2 FL ~~188.23~~ 188.23 (15" Out) FL ~~188.23~~ 188.23 (18" In)

FL ~~188.43~~ 188.43

FL ~~185.00~~ 184.72

Sta. 3+03.6 FL ~~186.54~~ 186.54 (Out) FL ~~186.54~~ 186.54 (In)

Sta. 3+03.8 FL ~~186.66~~ 186.39 (In)

Sta. 5+75.6 FL ~~186.66~~ 186.39

0 1 ~~134.7~~ 2 ~~270.9~~ 3 ~~404.4~~ ~~443.5~~ 0 1 2 ~~303.8~~ 3+03.6 3+03.8 ~~5+16.6~~

190 185 180 175 170 200 195 190 185 180 175 170

LIFE CARE CENTER
WICHITA, KANSAS
STORM SEWER LINES 1 AND 2

SRB 924 NORTH MAIN WICHITA, KANSAS 67203 316-264-8008 FAX 264-4821

SAVOY, RUGGLES & BOHM, P.A.
ENGINEERING & SURVEYING

PROJECT NUMBER 575 PPS (607861)

DRAWN TEB | DESIGN TCR | REVIEW | DATE 7-26-95 | UTILITY | SRB JOB 287E\SWD1

REVISED 10-25-95

C1.2

1/4

JOHNNY CHARLES THOMAS LICENSED 8821 7-20-95 KANSAS PROFESSIONAL ENGINEER

S+T 51.5

MANHOLE WITH BEEHIVE INLET TOP

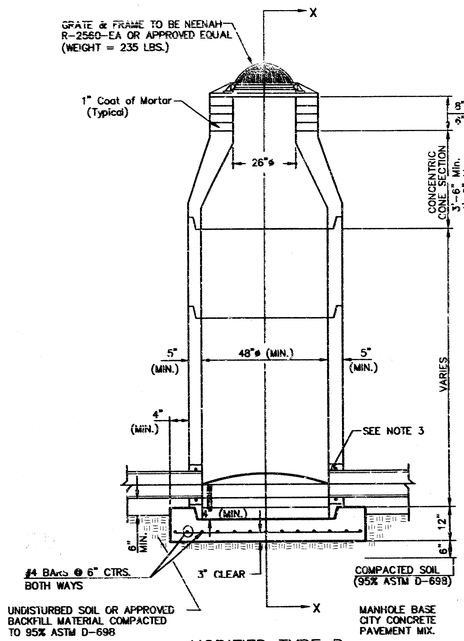

MODIFIED TYPE P
STANDARD MANHOLE

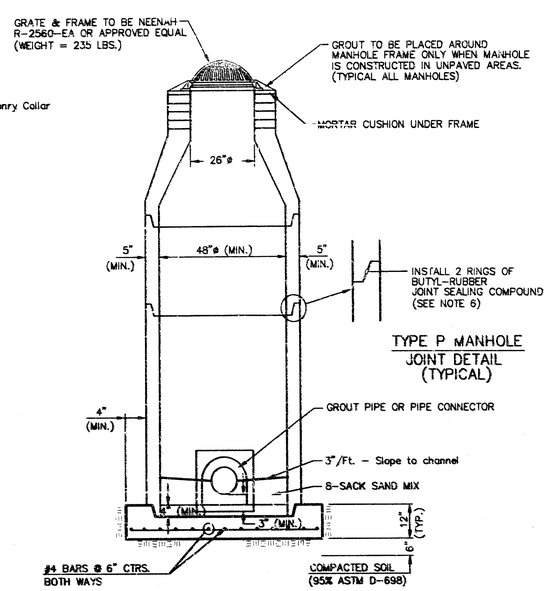

SECTION X
(TYPICAL)

MANHOLE WITH FLAT GRATED COVER

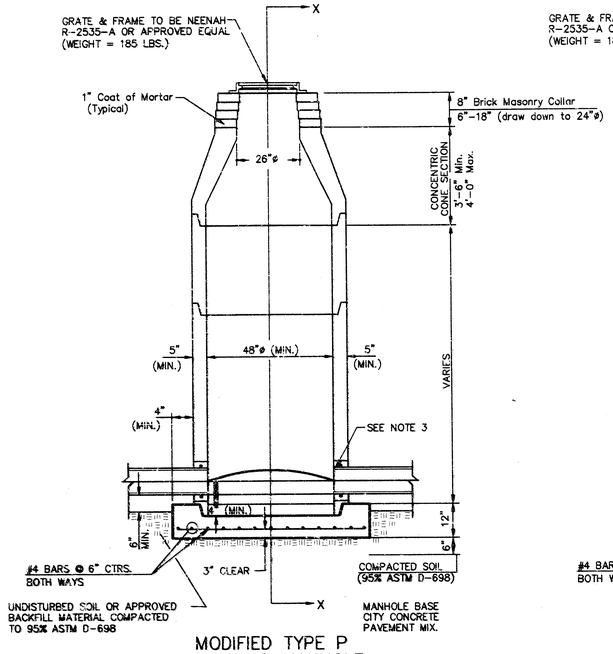

MODIFIED TYPE P
STANDARD MANHOLE

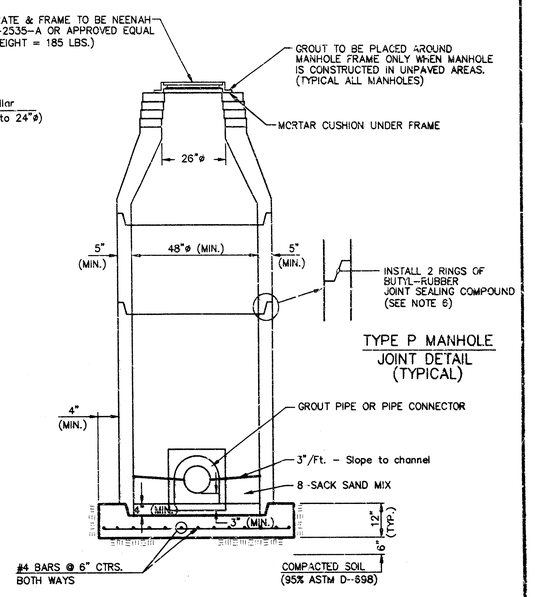

SECTION X
(TYPICAL)

GENERAL NOTES

PRECAST MANHOLE NOTES

1. ALL PRECAST CONCRETE MANHOLE SECTIONS SHALL CONFORM TO THE LATEST REVISIONS OF A.S.T.M. C478 AS MODIFIED BY THE SPECIFICATIONS.
2. NON-SHRINK GROUT SHALL BE NON-METALLIC TYPE.
3. APPROVED FLEXIBLE WATERSTOP GASKETS SHALL BE INSTALLED TO JOIN THE SEWER TO THE MANHOLE WALL WHEN A.B.S. COMPOSITE PIPE OR P.V.C. PIPE IS USED. FOR OTHER TYPES OF PIPE THE SEWER SHALL BE GROUTED IN PLACE WITH NON-SHRINK GROUT. THE SEWER PIPE SHALL BE SUPPORTED WITH CONCRETE ENCASEMENT A MINIMUM OF 3 FEET FROM THE MANHOLE WALL AND TO THE FIRST JOINT FOR V.C.P. SUCH THAT THE JOINT REMAINS FLEXIBLE.
4. ALL INSIDE SURFACES OF THE CONCRETE MANHOLE WHICH WOULD BE EXPOSED TO SEWER GAS SHALL BE COATED WITH 2 COATS TNEMEC SERIES 66 HI-BUILD EPOXOLINE, DRY THICKNESS OF 8 MILS (MIN.)
5. EXTERIOR MANHOLE WALLS SHALL BE COATED WITH 1 COAT MOBILARMA 633 BITUMINOUS COATING.
6. JOINT SEALING COMPOUND SHALL BE KENT SEAL NO. 2 OR APPROVED EQUAL.
7. PRECAST MANHOLES SHALL BE SET AT LEAST 4 INCHES INTO THE MANHOLE BASE.
8. TOP OF MANHOLE FLOOR SLAB SHALL BE AT LEAST 3 INCHES BELOW THE FLOW LINE OF THE OUTLET PIPE TO INSURE SUFFICIENT MINIMUM THICKNESS OF SHAPED INVERT.
9. LIFTING HOLES SHALL BE FILLED WITH NON-SHRINK GROUT AND THE INTERIOR SURFACE COATED AS SPECIFIED.
10. MORTAR USED IN MASONRY CONSTRUCTION SHALL CONTAIN 8 SACKS OF CEMENT PER CUBIC YARD. CONCRETE USED IN MANHOLE BASES SHALL CONFORM TO THE REQUIREMENTS OF CONCRETE FOR CONCRETE PAVEMENT CONSTRUCTION AS SPECIFIED IN THE CITY STANDARD PAVING SPECIFICATIONS USING CITY CONCRETE PAVEMENT MIX WITHOUT AIR ENTRAINING ADMIXTURE. MORTAR SHALL BE PLACED AROUND THE MANHOLE RING AS SHOWN ON THE DRAWINGS WHEN MANHOLES ARE CONSTRUCTED IN UNPAVED AREAS. MANHOLES CONSTRUCTED WHERE PIPE SIZES ARE SMALLER THAN 24" SHALL HAVE AN INSIDE DIAMETER OF 4', EXCEPT WHERE SPECIAL MANHOLE IS SPECIFIED. MANHOLES CONSTRUCTED WHERE PIPE SIZES ARE 24" OR LARGER SHALL HAVE AN INSIDE DIAMETER OF 5'. COMPLETED MANHOLE SHALL BE WITHOUT LEAKS AND WATER TIGHT.
11. REINFORCING STEEL SHALL BE INSTALLED IN THE MANHOLE BASES AND SHALL CONSIST OF NO. 4 BARS PLACED ON 6" CENTERS IN BOTH DIRECTIONS. THE MANHOLE BASE REINFORCEMENT SHALL BE PLACED AT LEAST 3" ABOVE THE BOTTOM OF THE MANHOLE BASE. ALL COSTS FOR FURNISHING AND INSTALLING REINFORCING STEEL SHALL BE INCLUDED IN THE UNIT PRICE BID FOR THE MANHOLE.
12. THE FLOORS OF ALL MANHOLES SHALL BE SHAPED WITH FLOW CHANNELS SUCH THAT THE MANHOLES WILL BE SELF CLEANING AND FREE OF AREAS WHERE SOLIDS COULD BE DEPOSITED AS SEWAGE FLOWS THROUGH THE MANHOLE FROM ALL INLET PIPES TO THE OUTLET PIPE. FLOW CHANNELS SHALL BE FORMED TO MATCH THE BOTTOM HALVES OF THE INFLOWING PIPES AND THE OUTFLOWING PIPE AS SHOWN BY THE DRAWINGS EXCEPT FOR INSIDE DROP MANHOLES. FLOW CHANNELS FOR INSIDE DROP MANHOLES SHALL BE CONSTRUCTED AS INDICATED BY THE DRAWING. MANHOLE FLOORS SHALL HAVE SLOPES OF 3 INCHES PER FOOT IN THE AREAS OUTSIDE OF THE FLOW CHANNELS SLOPED TOWARD THE FLOW CHANNELS. PIPES LAID THROUGH MANHOLES SHALL HAVE THE TOP HALF REMOVED TO NEAT LINES FOR THE FULL INSIDE DIAMETER OF THE MANHOLE. MANHOLE FLOORS SHALL THEN BE SHAPED AROUND THE BOTTOM HALF OF THE PIPE WHICH FORMS THE FLOW CHANNEL.
13. PIPES INSTALLED WITHIN THE EXCAVATION MADE FOR THE MANHOLE SHALL BE CRADLED WITH CONCRETE TO THE LIMITS OF THE MANHOLE EXCAVATION. WHEN CLAY PIPE IS USED, THE CRADLE SHALL EXTEND TO THE FIRST JOINT OUTSIDE THE MANHOLE. THE CRADLE SHALL BE TERMINATED AT THE CLAY PIPE JOINT IN A MANNER WHICH WILL MAINTAIN THE FLEXIBILITY OF THE JOINT. COST OF CRADLE WITHIN MANHOLE EXCAVATION OR TO CLAY PIPE JOINTS ADJACENT TO MANHOLE SHALL BE INCLUDED IN THE UNIT PRICE BID FOR THE MANHOLE.
14. MANHOLE COVER CASTINGS AND MANHOLE FRAME CASTINGS SHALL CONFORM TO THE REQUIREMENTS AS INDICATED IN THE STANDARD SPECIFICATIONS.
15. A BRICK MASONRY COLLAR SHALL BE INSTALLED BETWEEN THE CAST IRON FRAME AND THE CONCENTRIC CONE, EXCEPT ON SPECIAL MANHOLES. THE COLLAR WILL HAVE 8" WALLS AND A VERTICAL HEIGHT OF 6" MINIMUM AND 18" MAXIMUM. A 1" COAT OF MORTAR WILL BE PLASTERED ON THE OUTSIDE OF THE COLLAR. THE USE OF PRE-CAST CONCRETE SPACERS FOR MANHOLE TOP ADJUSTMENT IS ALSO ALLOWED.

LIFE CARE CENTER
WICHITA, KANSAS
MANHOLE INLET DETAILS

SRB 924 NORTH MAIN WICHITA, KANSAS 67203 316-264-8008 FAX 264-4621
SAVOY, RUGGLES & BOHM, P.A.
ENGINEERING & SURVEYING

REVISED

C1.3

PROJECT NUMBER 575 PPS

DRAWN	DESIGN	REVIEW	DATE	UTILITY	SRB JOB
TEB	TCR		7-21-95		287E\BHMH

2/4

F:\FINAL PROJECTS\PROJECTS 200-300\287E (LIFE CARE CENTER)\BHMH

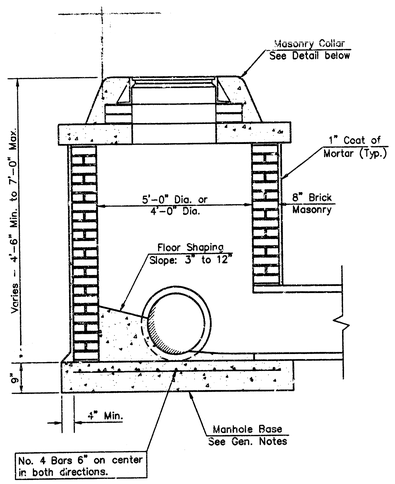

SHALLOW TYPE "A" MANHOLE

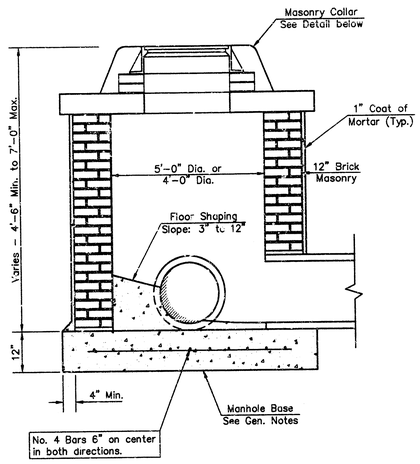

SHALLOW TYPE "B" MANHOLE

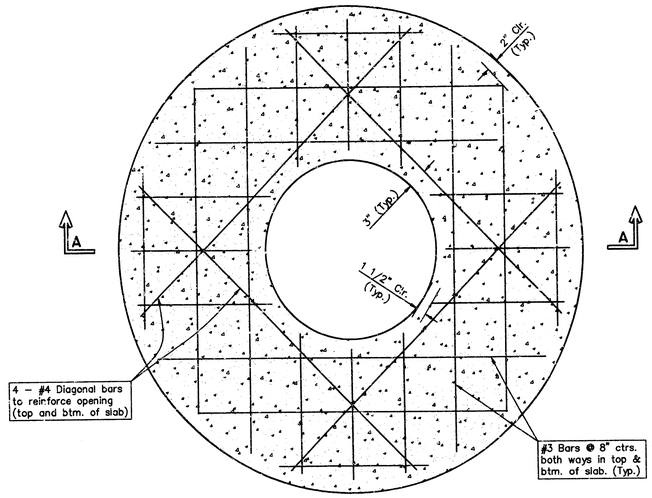

PLAN

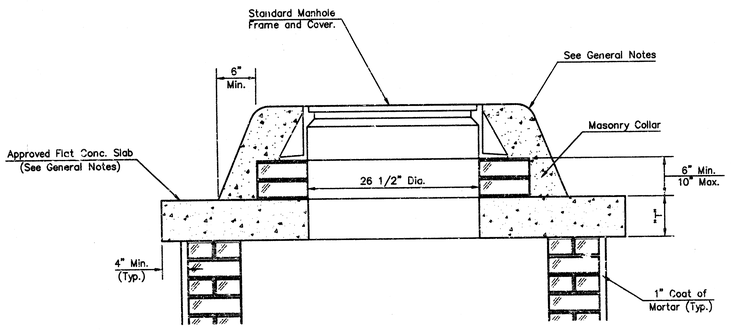

MASONRY COLLAR DETAIL

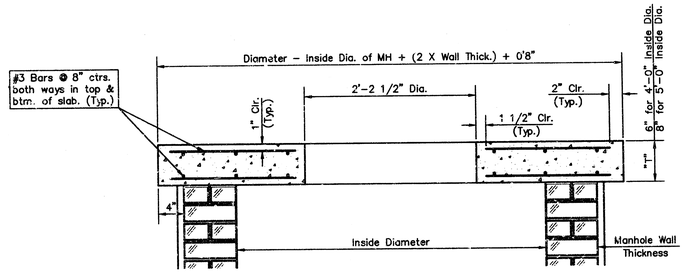

SECTION A-A

FLAT CONCRETE SLAB DETAILS

GENERAL NOTES

1. Mortar used in masonry construction shall contain 8 sacks of cement per cubic yard. Concrete used in manhole bases shall conform to the requirements of concrete for concrete pavement construction as specified in the city standard paving specifications using city concrete cement mix without air entraining admixture. Mortar shall be placed around the manhole ring as shown on the drawings when manholes are constructed in unpaved areas. Type "A" shallow manholes can be used on sewers when the manhole is not located within public street pavement. Manholes constructed where pipe sizes are smaller than 24" shall have an inside diameter of 4'. Manholes constructed where pipe sizes are 24" or larger shall have an inside diameter of 5'. Completed manhole shall be without leaks and water tight.
2. Reinforcing steel shall be installed in the manhole bases and shall consist of no. 4 bars placed on 6" centers in both directions. The manhole base reinforcement shall be placed 6" above the bottom of the manhole base. All costs for furnishing and installing reinforcing steel shall be included in the unit price bid for the manhole.
3. The floors of all manholes shall be shaped with flow channels such that the manholes will be self cleaning and free of areas where solids could be deposited as sewage flows through the manhole from all inlet pipes to the outlet pipe. Flow channels shall be formed to match the bottom halves of the inflowing pipes and the outflowing pipe as shown by the drawings. Manhole floors shall have slopes of 3 inches per foot in the areas outside of the flow channels sloped toward the flow channels. Pipes laid through manholes shall have the top half removed to neat lines for the full inside diameter of the manhole. Manhole floors shall then be shaped around the bottom half of the pipe which forms the flow channel.
4. Pipes installed within the excavation made for the manhole shall be cradled with concrete to the limits of the manhole excavation. When clay pipe is used, the cradle shall extend to the first joint outside the manhole. The cradle shall be terminated at the clay pipe joint in a manner which will maintain the flexibility of the joint. Cost of cradle within manhole excavation or to clay pipe joints adjacent to manhole shall be included in the unit price bid for the manhole.
5. Manhole cover castings and manhole frame castings shall conform to the requirements as indicated in the standard specifications and as shown in the standard detail drawings.
6. The crowns of inflowing pipes shall never be set lower than the crown of the outflowing pipe.
7. Standard shallow manholes type "A" and "B" shall be paid for at the unit price bid per each for the type and diameter indicated. Standard special shallow manholes type "A" and "B" shall be paid for at the unit price bid per each for the type indicated. All standard shallow manhole diameters will be 4' unless indicated otherwise.
8. All brick used in manhole construction shall meet Grade SW of ASTM C652 or C62-87.

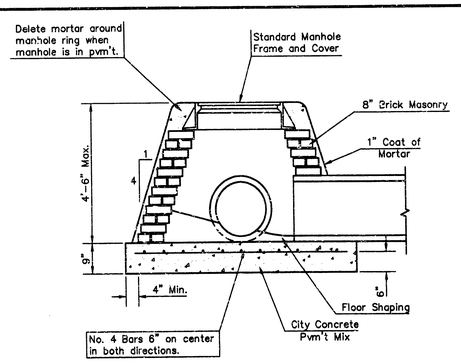

SPECIAL SHALLOW TYPE "A" MANHOLE

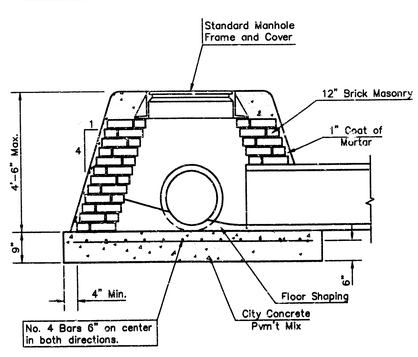

SPECIAL SHALLOW TYPE "B" MANHOLE

SHALLOW MANHOLE DETAILS
SEWER APPURTENANCES DETAILS
WICHITA, KANSAS

SRB
924 NORTH MAIN
WICHITA, KANSAS 67203
316-264-8008
FAX 264-4621

SAVOY, RUGGLES & BOHM, P.A.
ENGINEERING & SURVEYING

REVISED

PROJECT NUMBER
575 PPS

C1.4

DRAWN	DESIGN	REVIEW	DATE	UTILITY	SRB JOB	SHEET NO.
TEB	TCR		7-21-93		287E/SHLWMH	3/4

F:\FINAL PROJECTS\PROJECTS 200-300\287E (LIFE CARE CENTER)\SHLWMH

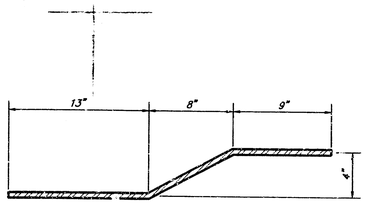

"b" BAR

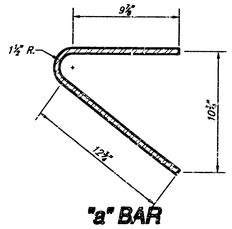

"a" BAR

BENDING DIAGRAM

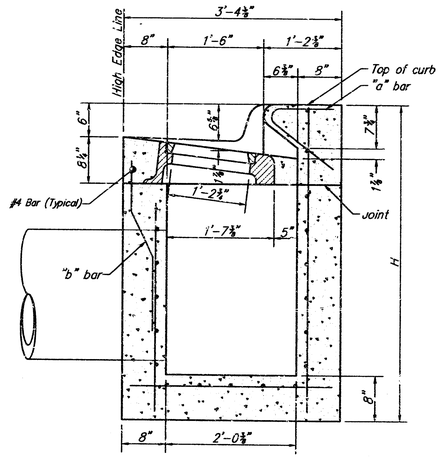

SECTION A-A

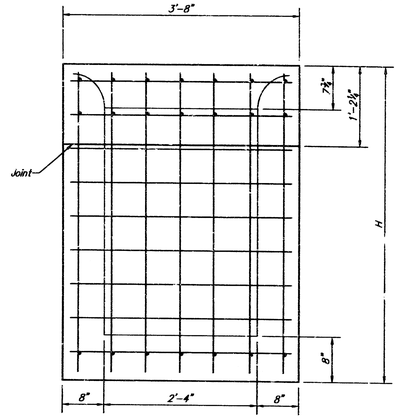

REAR WALL

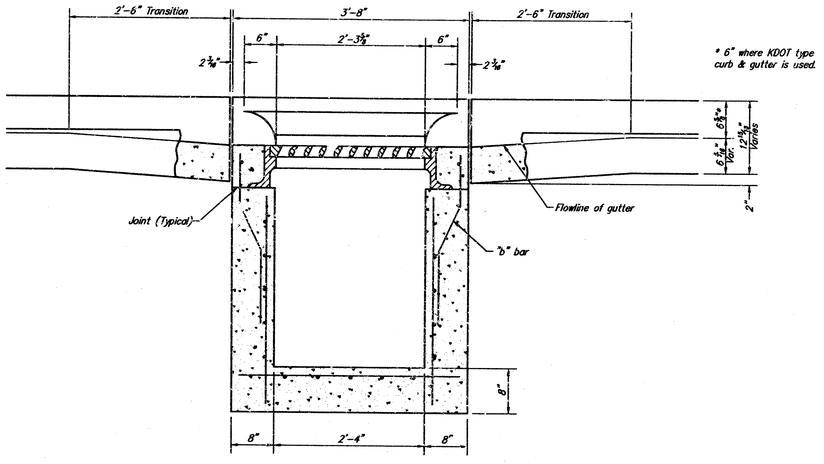

SECTION C-C

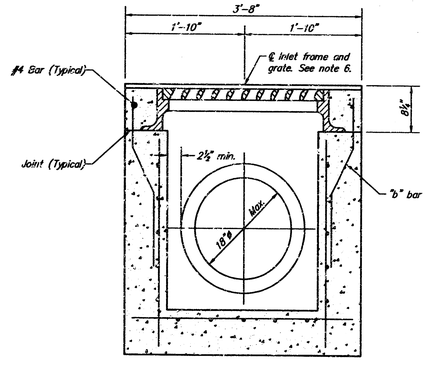

SECTION B-B

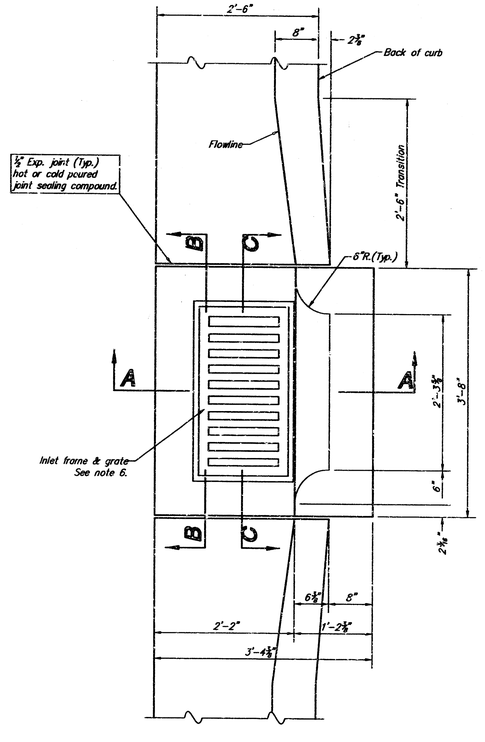

PLAN

GENERAL NOTES:

1. Use the concrete mix specified for the City of Wichita concrete pavement throughout. All exposed edges shall be finished with an edging tool. Reinforcing bars shall be bent around pipe.
2. Inlet invert shall be shaped with 8 sack mix concrete to create flow channels and to increase hydraulic efficiency such that the inlet will be self cleaning between all inlet and/or outlet pipes.
3. All bars are #4 with 6" spacing and shall have a minimum clearance of 1 inches unless otherwise noted on the plans.
4. When directed by the Engineer, a small opening may be required in the back of the inlet in order to drain a low area. Reinforcing bars will extend through the openings. No deductions in concrete quantities will be made for these openings.
5. No deductions will be made in pay length of curb, gutter, or curb and gutter through the inlet area.
6. Use Neenah R-3289-HV Single Inlet Frame and Grate or approved equal. Inlet frame to be proof load tested to 40,000 lbs. on unsupported side.
7. Reinforcing bars shall be cut or bent around pipes. No deduction in concrete quantities shall be made for pipe openings.
8. The vanes of the grate shall be oriented with respect to the flow arrows shown on the plans.
9. Deeter Foundry, Inc. casting No. 2441 with style H grate is an approved equal to Neenah castings specified. Inlet drawing is based on Neenah castings and concrete walls and supports will require some field modifications to accommodate.

CITY OF WICHITA STANDARD TYPE II CURB INLET DETAILS INLET OPENING = 6" x 2'-3 5/8"

SRB
924 NORTH MAIN
WICHITA, KANSAS 67203
316-264-8008
FAX 264-4521
SAVOY, RUGGLES & BOHM, P.A.
ENGINEERING & SURVEYING

REVISED

C1.5

PROJECT NUMBER 575 PPS

4/4

DRAWN	DESIGN	REVIEW	DATE	UTILITY	SRB JOB
J. Lang	C.O.W.		Dec. 2, 1994		287E/TYPEII-S

F:\FINAL PROJECTS\PROJECTS 200-300\287E (LIFE CARE CENTER)\TYPEII-S