GENERAL NOTES

1. All work on this project shall conform to the Standard Specifications for Storm Sewer Construction of the City of Wichita.
2. Locating dimensions are to center of in new inlet.
3. All areas within public right-of-way which may be disturbed by Contractor's operations shall be restored in accordance with City of Wichita Administrative Regulation AR-78.
4. The Contractor shall notify Kansas One-Call (687-2470) a minimum of 24 hours prior to any excavation.
5. Traffic on right-turn lane from West St. to Kellogg to be maintained at all times.

RUNOFF CALCULATIONS

By Rational Formula: Q=CIA
Impervious Area = 44551 S.F.
Pervious Area = 4663 S.F.
D.A. (to Storm Sewer) = 1.07 ac.
$C_{impervious}$ = 0.95
$C_{pervious}$ = 0.65
$C_{weighted}$ = 0.92
Assume time of concentration = 10 min.
I_5 = 5.34 in./hr. I_{100} = 8.54 in./hr.
Q_5 = 5.3 cfs Q_{100} = 8.4 cfs

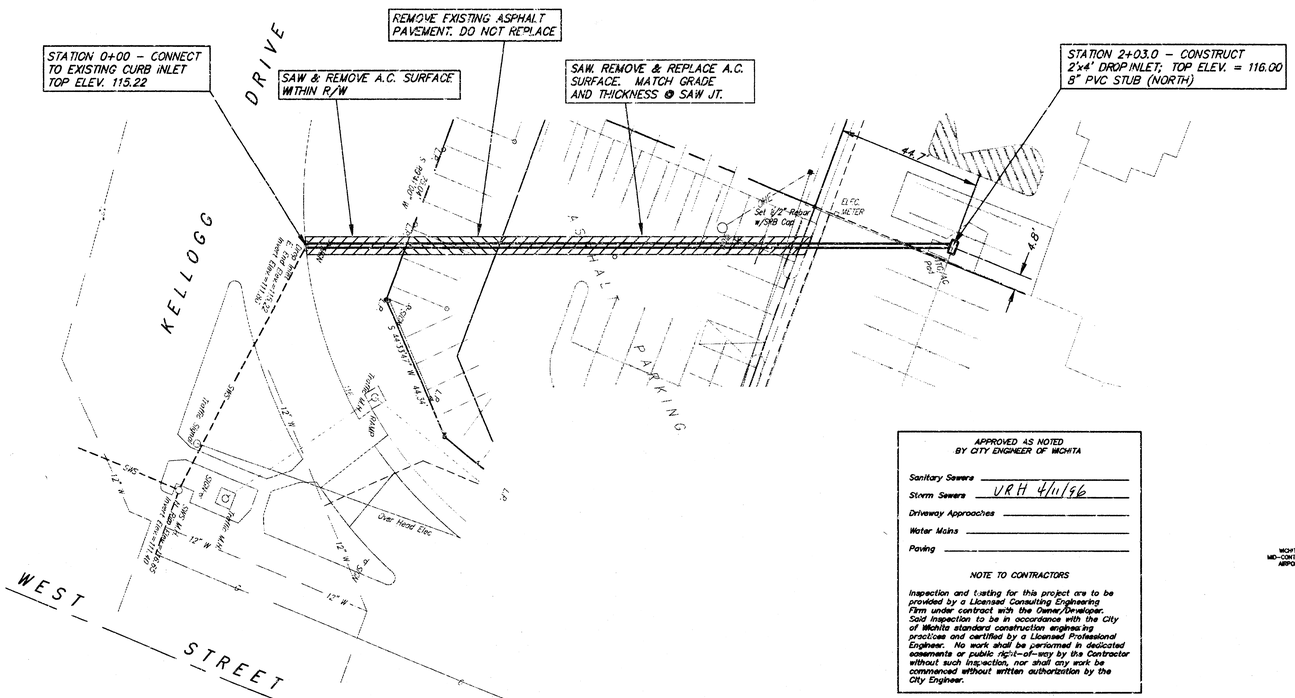

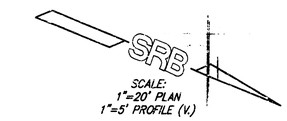

SCALE:
1"=20' PLAN
1"=5' PROFILE (V.)

BENCH MARK
CITY OF WICHITA B.M.
E. SIDE OF R.R. CROSSING SIGNAL BASE
46.8' W. & 111.9' S. OF INTERSECTION
OF CENTERLINES OF WEST STREET & KELLOGG
ELEV. = 119.12 (CITY OF WICHITA, DATUM)
ELEV. = 1306.52 (N.G.V.D.)

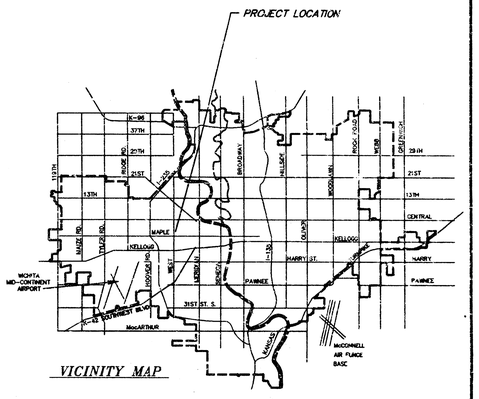

VICINITY MAP

APPROVED AS NOTED
BY CITY ENGINEER OF WICHITA

Sanitary Sewers _____
Storm Sewers VRH 4/11/96
Driveway Approaches _____
Water Mains _____
Paving _____

NOTE TO CONTRACTORS

Inspection and testing for this project are to be provided by a Licensed Consulting Engineering Firm under contract with the Owner/Developer. Said inspection to be in accordance with the City of Wichita standard construction engineering practices and certified by a Licensed Professional Engineer. No work shall be performed in dedicated easements or public right-of-way by this Contractor without such inspection, nor shall any work be commenced without written authorization by the City Engineer.

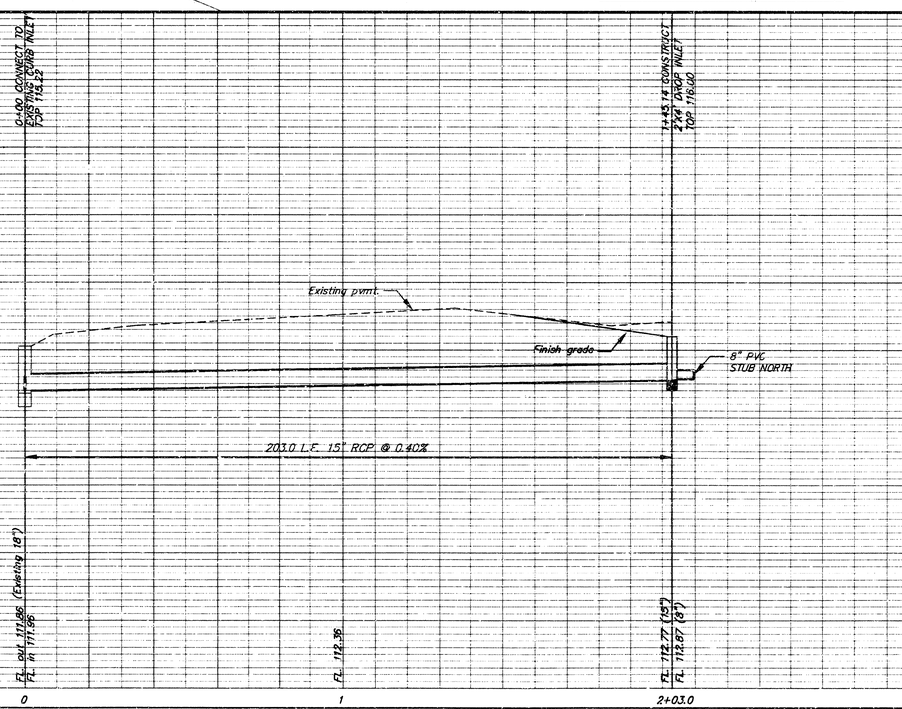



Booked 4-10-97 MG D-335

REVISED 4-10-96 JCR AS BUILT 6-26-96

PRIVATE STORM WATER SEWER
LOT 1, C.J. LUBBER'S ADDITION
WICHITA, KANSAS

SRB 924 NORTH MAIN WICHITA, KANSAS 67203 316-264-8008 FAX 264-4621
SAVOY, RUGGLES & BOHM, P.A.
ENGINEERING & SURVEYING

PROJECT NUMBER 611 PPS (607861)

DRAWN	DESIGN	REVIEW	DATE	UTILITY	SRB JOB
CMB	T.C.R.	JCR	4-8-96	T.C.R.	410E

DWG. NAME \SRB\410E\SHEET1

REVISED
1
2

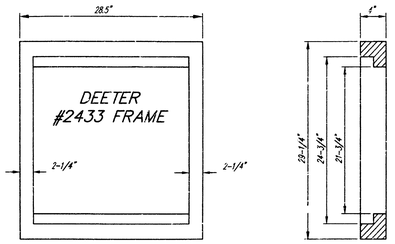

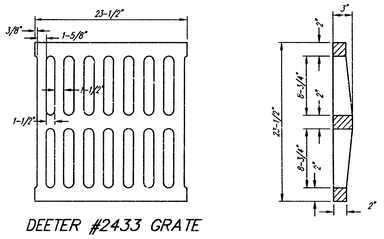

DEETER #2433 GRATE

24" x 24" Frame and Grate Detail

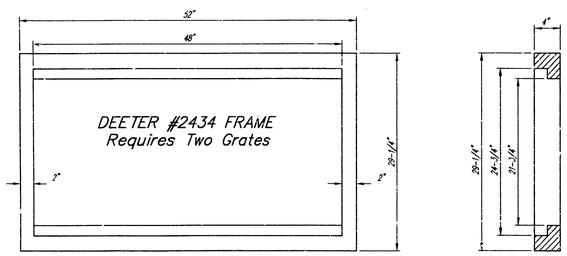

Double 24" x 24" Frame Detail

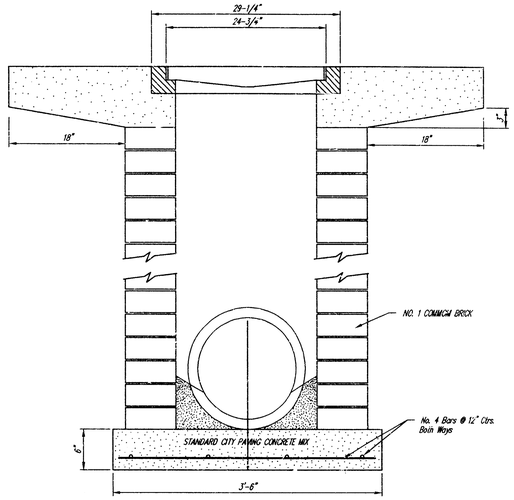

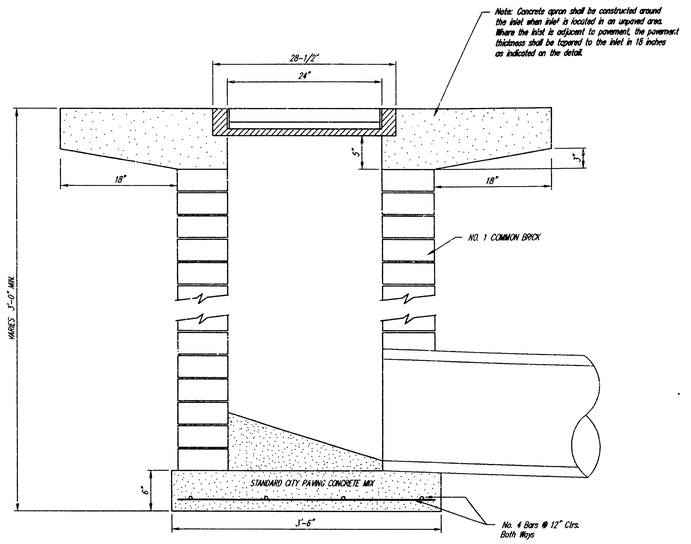

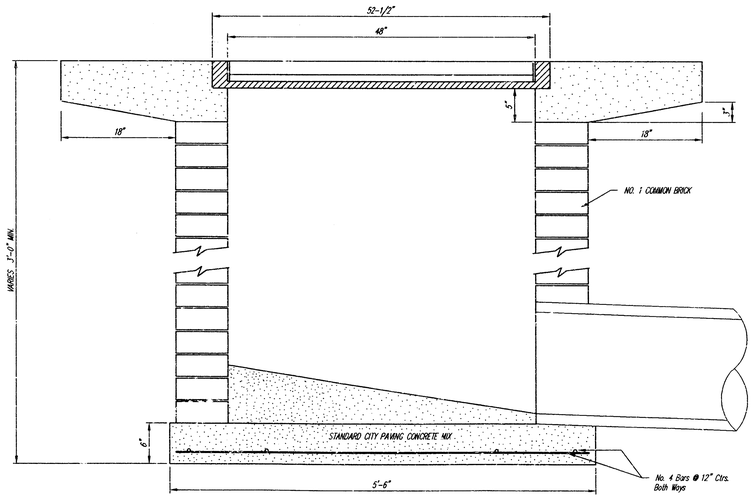



DROP INLET DETAILS	2
Project no. 611 PPS (607861)	2