STORM SEWER IMPROVEMENTS
FOR A
PROPOSED TACO SHOP
LOCATED IN
LOT 2, EXCEPT THE NORTH 50 FEET, BLOCK 1,
WEBB ROAD ADDITION
WICHITA, SEDGWICK COUNTY, KANSAS

CITY OF WICHITA PRIVATE PROJECT NO. 623 PPS(607861)

MIKE LINDEBAK, P.E., CITY ENGINEER

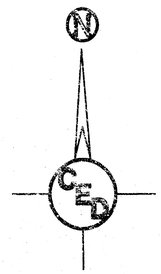

No Scale

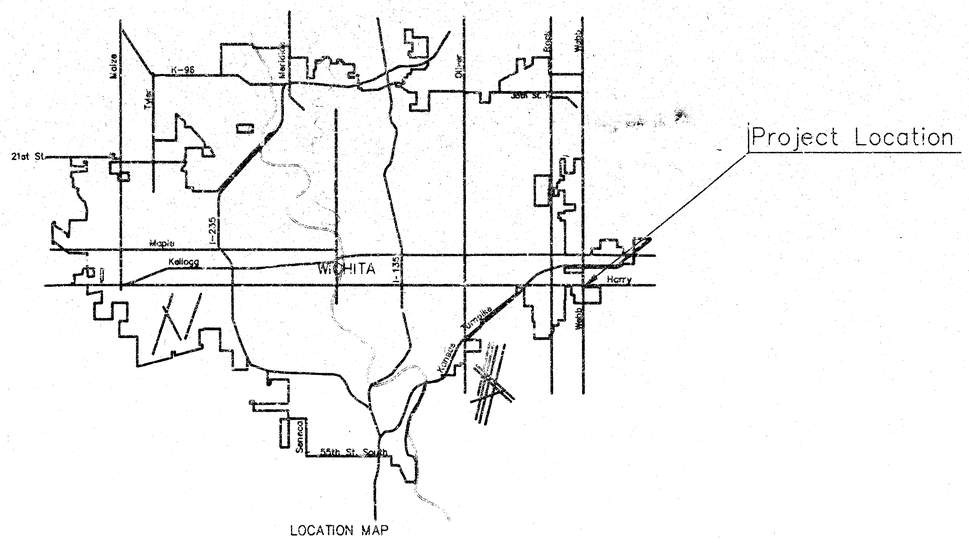

LOCATION MAP

INDEX OF SHEETS

1. Title Sheet
2. Plan--Profile Sheet
3. Curb Inlet Detail

PROJECT LOCATED IN
LOT 2, EXCEPT THE NORTH 50 FEET, BLOCK 1
WEBB ROAD ADDITION, SEDGWICK COUNTY, KANSAS



APPROVED AS NOTED
By CITY ENGINEER OF WICHITA

Sanitary Sewers _____
Storm Sewers VRH 7/19/96
Driveway Approaches _____
Water Mains _____
Paving _____

NOTE TO CONTRACTOR

INSPECTION AND TESTING FOR THIS PROJECT IS TO BE PROVIDED BY A LICENSED CONSULTING ENGINEERING FIRM UNDER CONTRACT WITH THE OWNER/DEVELOPER. SAID INSPECTION TO BE IN ACCORDANCE WITH THE CITY OF WICHITA STANDARD CONSTRUCTION ENGINEERING PRACTICES AND CERTIFIED BY A LICENSED PROFESSIONAL ENGINEER. NO WORK SHALL BE PERFORMED IN DEDICATED EASEMENTS OR THE PUBLIC RIGHT-OF-WAY BY THE CONTRACTOR WITHOUT SUCH INSPECTION NOR SHALL ANY WORK BE COMMENCED IN DEDICATED EASEMENTS OR PUBLIC RIGHT-OF-WAY WITHOUT WRITTEN AUTHORIZATION BY THE CITY ENGINEER.

COW PRIV. PROJ. NO. 623 PPS(607861)

CERTIFIED ENGINEERING DESIGN
CED
235 NORTH OHIO
WICHITA, KANSAS 67214
(316) 262-8608

SHEET 1
TOTAL 3

1" = 20'

BENCHMARK #1
COW BENCHMARK @ N.W. COR. INTERSECTION
OF WEBB ROAD AND HARRY
S.E. COR. SIGNAL LIGHT POLE BASE
ELEV.=171.64 City Datum
ELEV.=1359.04 MSL

LEGEND

- 6" Elm – EXISTING TREE AND DIAMETER
- 1362.5 – EXISTING SPOT ELEVATION
- 1362.5 / 1362.0 – PROPOSED TOP OF CURB/ FLOWLINE ELEVATION
- – DRAINAGE FLOW DIRECTION
- 1361.5 – CONTOUR LINE
- BM – BENCHMARK
- SS – SANITARY SEWER LINE
- OHE – OVERHEAD ELECTRIC LINE
- G – GAS LINE
- W – W – WATER LINE

NOTE: SPOT ELEVATIONS SHOWN FOR SITE GRADING PLAN ARE ON MEAN SEA LEVEL DATUM. ELEVATIONS FOR COW PRIVATE STORM SEWER PROJECT ARE ON CITY DATUM.

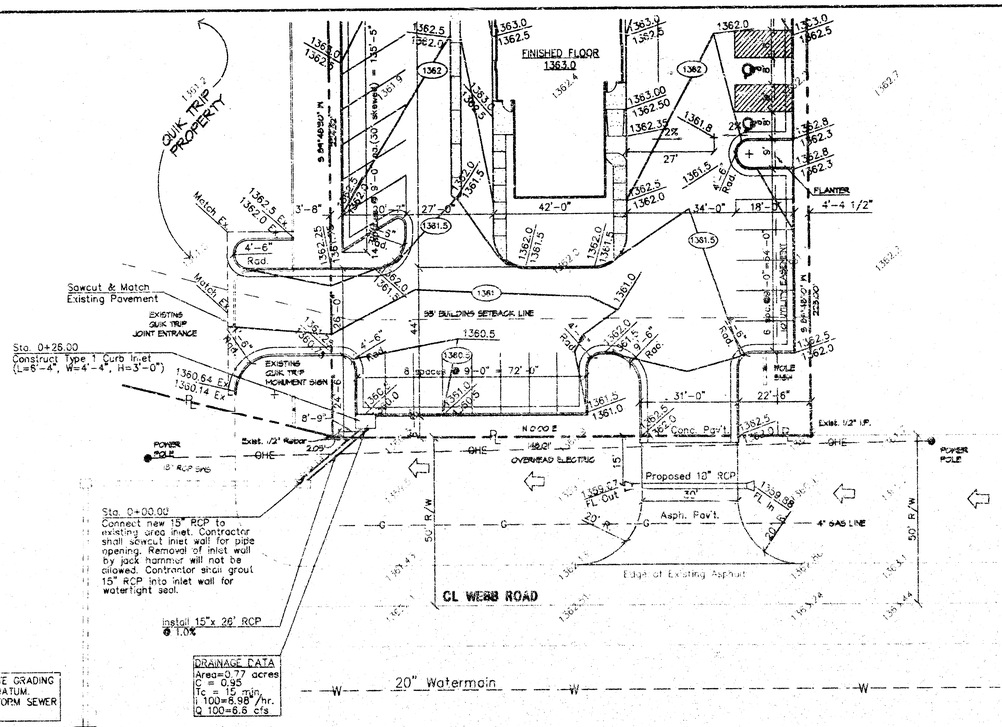

UTILITIES SHOWN REPRESENT THE BEST INFORMATION AVAILABLE FOR DESIGN. ADDITIONAL UTILITIES MAY BE PRESENT ON THIS PROJECT. THE CONTRACTOR SHALL BE RESPONSIBLE FOR DETERMINING THE EXACT LOCATION, DEPTH AND SIZE OF ALL UNDERGROUND UTILITIES PRIOR TO CONSTRUCTION. THE CONTRACTOR SHALL BE LIABLE FOR ANY DAMAGE CAUSED BY THE FAILURE TO DO SO.

GENERAL NOTES

1. The Contractor shall provide a minimum advance notice of 48 hours to utility companies prior to starting construction as follows:

   KANSAS ONE CALL 1-800-344-7233 or 687-2470(LOCAL WICHITA)

   The Contractor must notify the following in the event of an emergency:

Southwestern Bell Telephone	1-571-2115
Kansas Gas Service Company	262-0661
Kansas Gas & Electric	263-7511
Arkla Gas Company	264-1141
Multimedia Cablevision	262-0661
City of Wichita Water & Sewer	268-4908

2. Pavement grades shown are to the top of pavement.
3. Existing elevations were provided by others. Contractor shall verify existing grades and notify Engineer of any discrepancies.
4. Contractor shall be responsible for establishing and protecting Benchmark throughout construction.
5. Contractor shall strip site of topsoil(6" min.) and stockpile this material to be used in grassed areas.
6. Compaction of fill material and subgrade stablization shall comply with Geotechnical Engineering Report.
7. The Contractor shall restore City right-of-way to conditions which existed prior to the commencement of work shown on this plan.

LEGAL DESCRIPTION

Lot 2, except the north 50 feet thereof (as measured at right angles to the north line), Block 1, Webb Road Addition Sedgwick County, Kansas

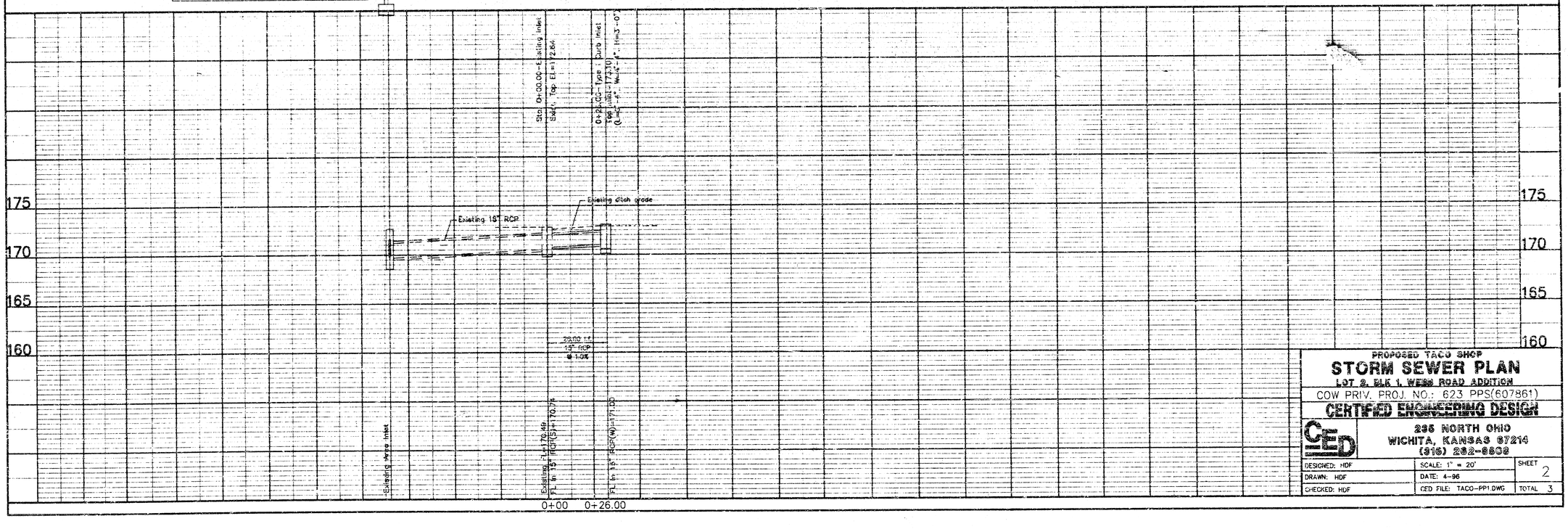

PROPOSED TACO SHOP
STORM SEWER PLAN
LOT 2, BLK 1, WEBB ROAD ADDITION
COW PRIV. PROJ. NO.: 623 PPS(607861)

CERTIFIED ENGINEERING DESIGN
235 NORTH OHIO
WICHITA, KANSAS 67214
(316) 262-8608

DESIGNED: HDF	SCALE: 1" = 20'	SHEET 2
DRAWN: HDF	DATE: 4-96	
CHECKED: HDF	CED FILE: TACO-PP1.DWG	TOTAL 3

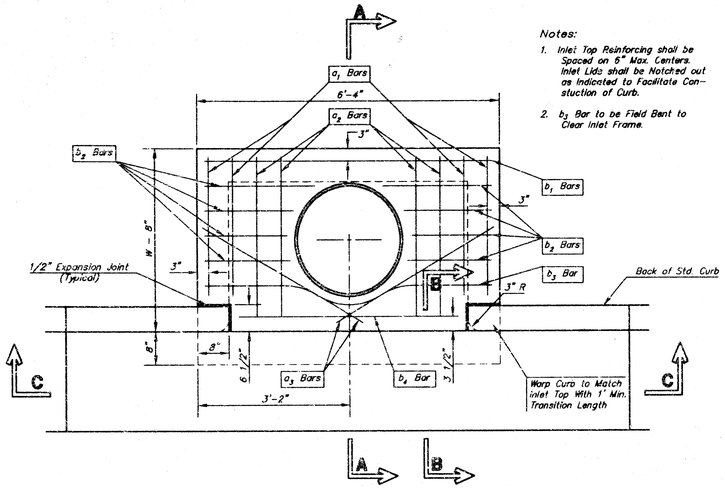

PLAN

Notes:

1. Inlet Top Reinforcing shall be Spaced on 6" Max. Centers. Inlet Lids shall be Notched out as Indicated to Facilitate Construction of Curb.
2. b_2 Bar to be Field Bent to Clear Inlet Frame.

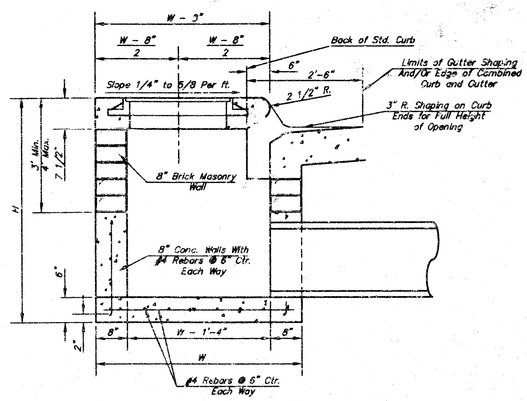

SECTION A-A

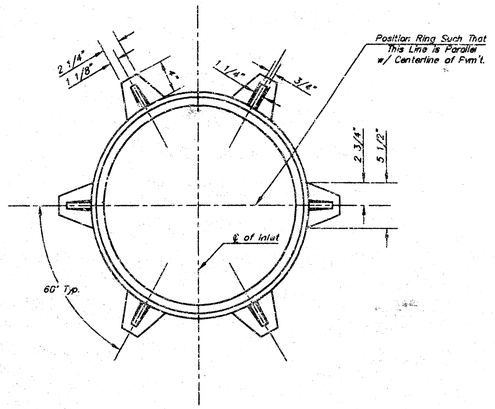

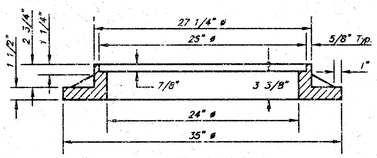

WT. = 180 lbs.

MANHOLE RING AND COVER

*See City of Wichita Standard Manhole Ring and Cover Detail Sheet for Cover Details to Be Used With Inlet Frame.

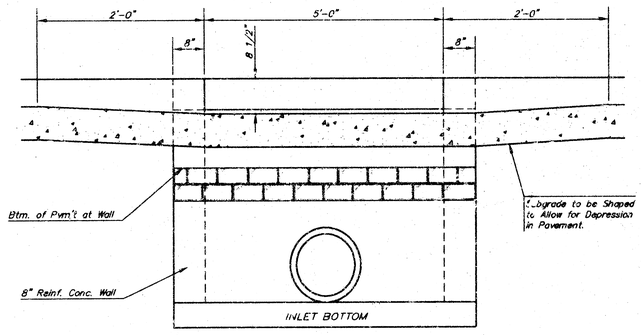

SECTION C-C

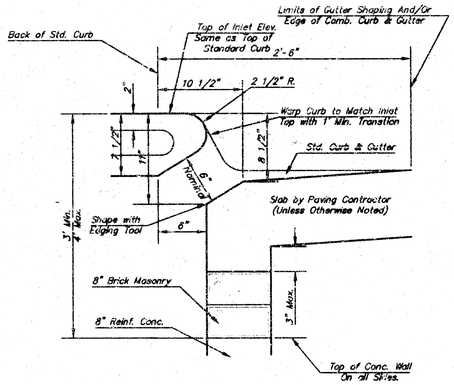

SECTION B-B

STEEL SCHEDULE

BAR		a_1	a_2	a_3	b_1 W=4'-4"	b_1 W=5'-4"	b_1 W=6'-4"	b_1 W=7'-4"	b_1 W=8'-4"	b_2	b_3	b_4	Wt. Lbs.
NUMBER		4	4	2	1	3	5	7	9	6	1	1	
SIZE		#4	#4	#4	#4	#4	#4	#4	#4	#4	#4	#6	
LENGTH	W=4'-4"	5'-7"	6'-7"	4'-0"	6'-1"	–	–	–	–	1'-9"	6'-2"	4'-8"	60±
	W=5'-4"	7'-7"	8'-7"	5'-0"	–	6'-1"	–	–	–	1'-9"	6'-2"	4'-8"	81±
	W=6'-4"	9'-7"	10'-7"	6'-0"	–	–	6'-1"	–	–	1'-9"	6'-2"	4'-8"	101±
	W=7'-4"	11'-7"	12'-7"	7'-0"	–	–	–	6'-1"	–	1'-9"	6'-2"	4'-8"	121±
	W=8'-4"	13'-7"	14'-7"	8'-0"	–	–	–	–	6'-1"	1'-9"	6'-2"	4'-8"	141±

Note: a_3 Bars to be Placed Approx. 2" Below Top of Inlet Cover.

STANDARD CURB INLET PRECAST TOPS			
W	PRE-CAST TOP SIZE	PIPE SIZE	CU. YD. CONC.
4'-4"	3'-8" 6'-4" 7 1/2"	21" & SMALLER	0.38±
5'-4"	4'-8" 6'-4" 7 1/2"	24" & 30"	0.51±
6'-4"	5'-8" 6'-4" 7 1/2"	36" & 42"	0.64±
7'-4"	6'-8" 6'-4" 7 1/2"	48" & 54"	0.77±
8'-4"	7'-8" 6'-4" 7 1/2"	60" & 66"	0.90±

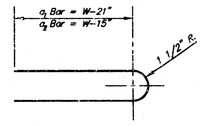

BENDING DIAGRAM

GENERAL NOTES

1. Concrete tops to be installed on thin mortar cushion to insure full support along brick walls. Concrete tops may be cast in place or precast. Concrete used for inlet construction shall be concrete pavement mix.
2. Contractor shall have the option of constructing 8" brick masonry walls between the concrete inlet base and top on this inlet when W=6'-4" and H=7'-0" or less.
3. Inlet invert shall be shaped with 8 sack sand mix concrete to create flow channels and to increase hydraulic efficiency such that the inlet will be self cleaning between all inlet and/or outlet pipes.
4. The ends of all pipes installed in inlets shall be cut off flush with the inside face of the inlet wall.

CITY OF WICHITA STANDARD TYPE I

CURB INLET DETAILS

INLET OPENING = 6" x 5'-0"

COW PROJ. NO.: 623 PPS(607861)

CERTIFIED ENGINEERING DESIGN

CED
236 NORTH OHIO
WICHITA, KANSAS 67214
(316) 262-8808

DESIGNED: HDF	SCALE: NONE	SHEET 3
DRAWN: HDF	DATE: 4-96	
CHECKED: HDF	CED FILE: TYPE1-S.DWG	TOTAL 3

6-5-96