SCALE:
1"=20' Horizontal
1"=5' Vertical

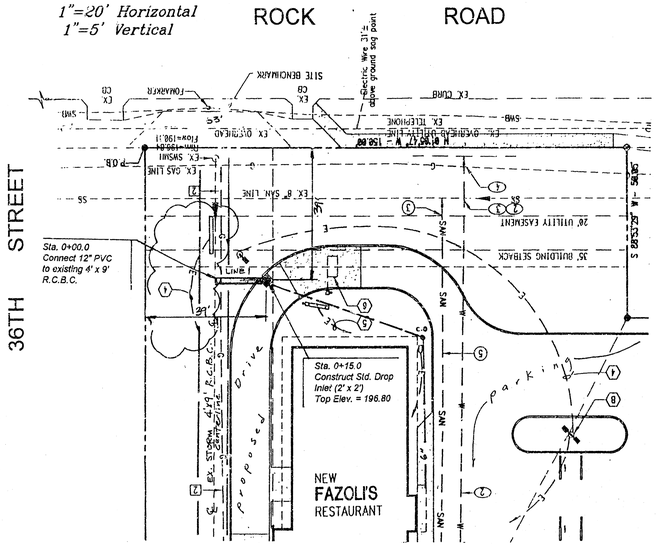

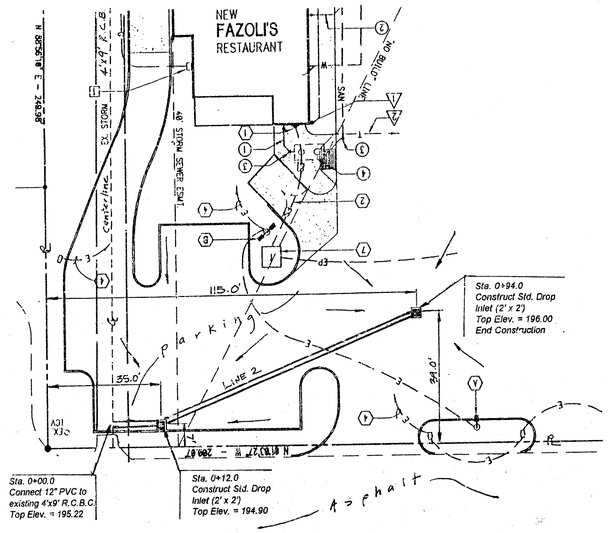

General Notes

1. Contractor will be required to provide notice to utility companies a minimum of twenty-four (24) hours prior to any excavation, as follows.

   Kansas One-Call 687-2270

   The Contractor must notify the following in case of an emergency:

Cablevision	262-4270
or	263-2061
K.P.L. Gas Service Company	383-8650
Kansas Gas & Electric Company	383-8600
Arkla Gas Company	942-8350
Southwestern Bell Telephone Company	1-571-2611
City of Wichita Water Department	268-4908
City of Wichita Sewer Maintenance	268-4071

2. Underground utility service lines and overhead utility pole lines are to be adjusted as necessary by others prior to construction unless the plans specifically call for their adjustment by the Contractor or unless the plans specifically identify a utility to be adjusted by its owner during construction. Existing utilities and their location, as shown on the plans, represent the best information obtainable for design. Location information has been obtained from the various utility companies and is either from company record drawings or company provided field locations. The Contractor will be required to work around existing utilities within the right-of-way which do not conflict with proposed construction.

3. Rubble from the removal of miscellaneous structures and excess excavation which is to be wasted shall be disposed of on sites to be provided by the Contractor. These sites shall be approved by the Engineer as to suitability, appearance and site location. Locations that, in the opinion of the Engineer, will leave an unsightly appearance will not be approved.

4. Trees and shrubs in public right-of-way which are in direct conflict with proposed new construction shall be removed by the Contractor with the Engineer's approval. Trees and shrubs which are not in direct conflict with proposed new construction shall be saved and protected from damage.

5. The Contractor shall give all property owners and/or tenants of developed property directly abutting the construction of this project a minimum of ten (10) days advance notice prior to start of construction.

6. The Contractor shall be responsible for preserving property irons. The Contractor will be required to re-establish any property irons which are damaged or destroyed by his construction operations. Such irons shall be re-established by a licensed land surveyor in accordance with state law.

7. The Contractor shall seed all areas disturbed by construction operations as per City of Wichita specifications.

Benchmark:

Datum B.M.-City of Wichita Bench Mark. NW. corner concrete field drain, 1.50'± east of the east line of Rock Road & south of the centerline of 37th Street North. (Elevation = 203.87)

Site B.M. -Chiseled Square cut on top of wall 20'± south and 10'± east of the NE. corner of Lot 6. (Elevation = 197.91)

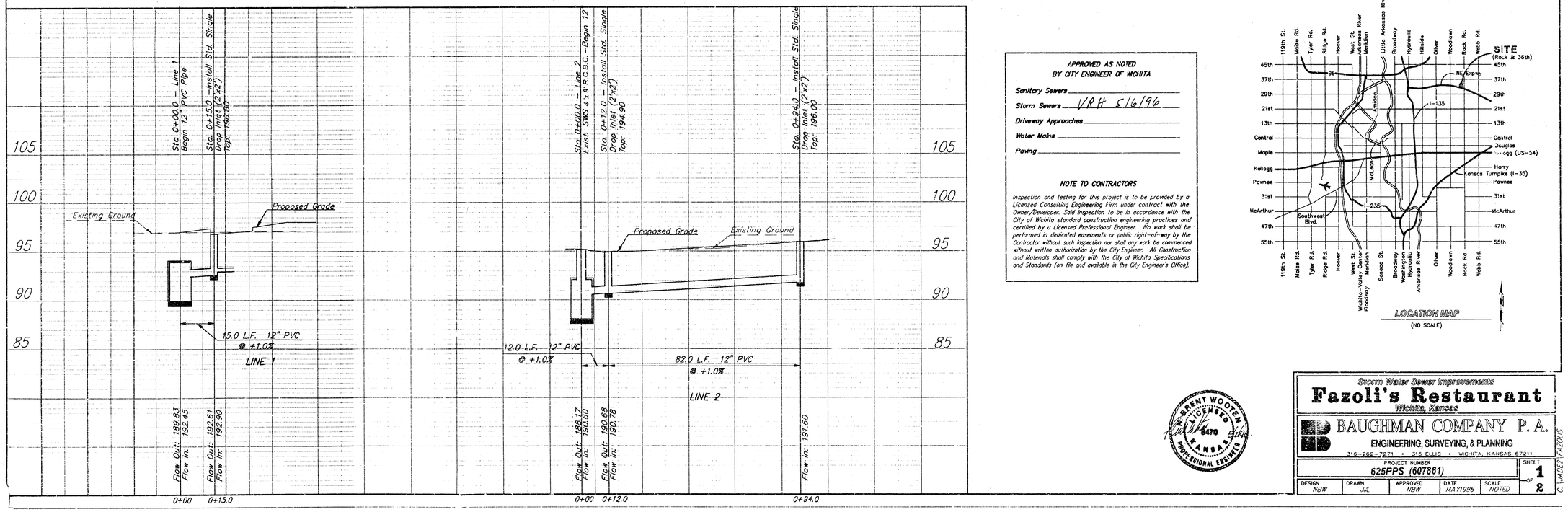

APPROVED AS NOTED
BY CITY ENGINEER OF WICHITA

Sanitary Sewers _____

Storm Sewers VRH 5/16/96

Driveway Approaches _____

Water Mains _____

Paving _____

NOTE TO CONTRACTORS

Inspection and testing for this project is to be provided by a Licensed Consulting Engineering Firm under contract with the Owner/Developer. Said inspection to be in accordance with the City of Wichita standard construction engineering practices and certified by a Licensed Professional Engineer. No work shall be performed in dedicated easements or public right-of-way by the Contractor without such inspection nor shall any work be commenced without written authorization by the City Engineer. All Construction and Materials shall comply with the City of Wichita Specifications and Standards (on file and available in the City Engineer's Office).

W. BRENT WOOTEN
LICENSED
5479
KANSAS
PROFESSIONAL ENGINEER

Storm Water Sewer Improvements

Fazoli's Restaurant
Wichita, Kansas

BAUGHMAN COMPANY P.A.
ENGINEERING, SURVEYING, & PLANNING
316-262-7271 • 315 ELLIS • WICHITA, KANSAS 67211

PROJECT NUMBER	SHEET
625PPS (607861)	1 of 2

DESIGN	DRAWN	APPROVED	DATE	SCALE
NBW	JJL	NBW	MAY1996	NOTED

C:\JADE2\FAZOLIS

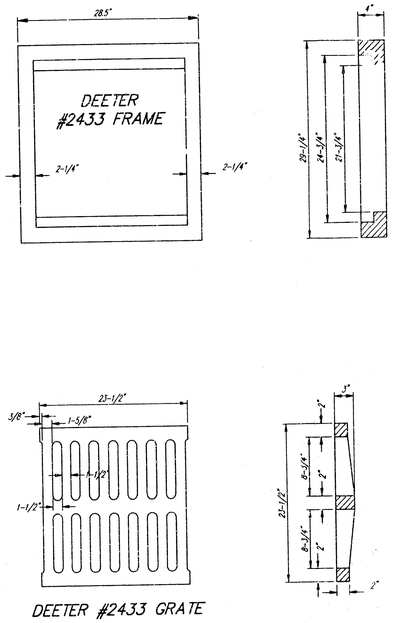

DEETER #2433 GRATE

NOTE: Grates shall be imprinted on the top surface with "CITY OF WICHITA" using letters at least 1" in height. Other marking methods may be approved by the engineer.

24" x 24" Frame and Grate Detail

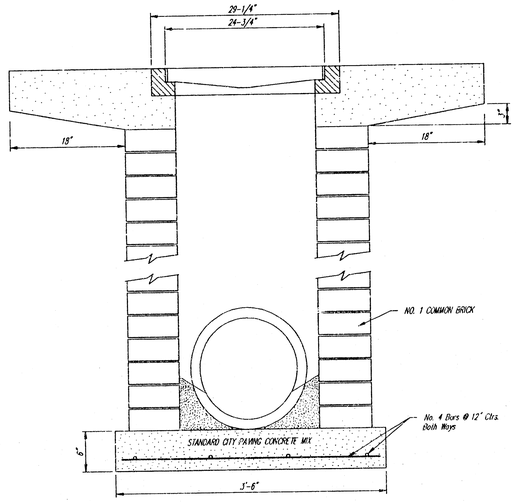

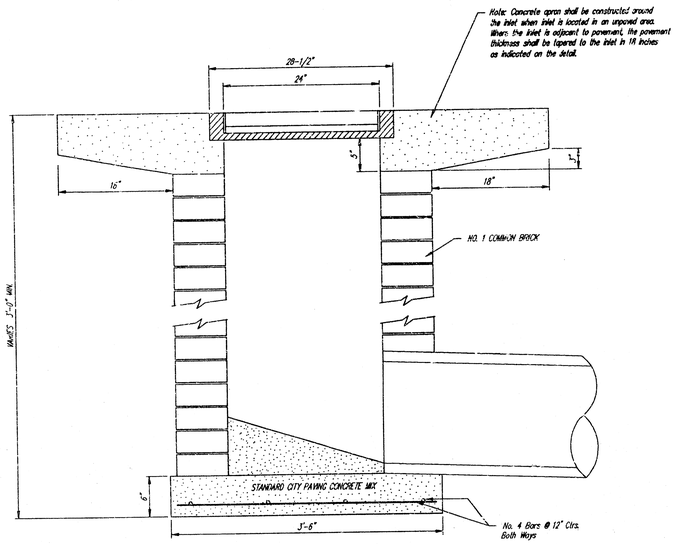

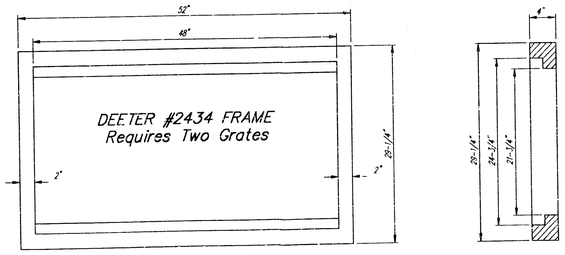

Double 24" x 24" Frame Detail

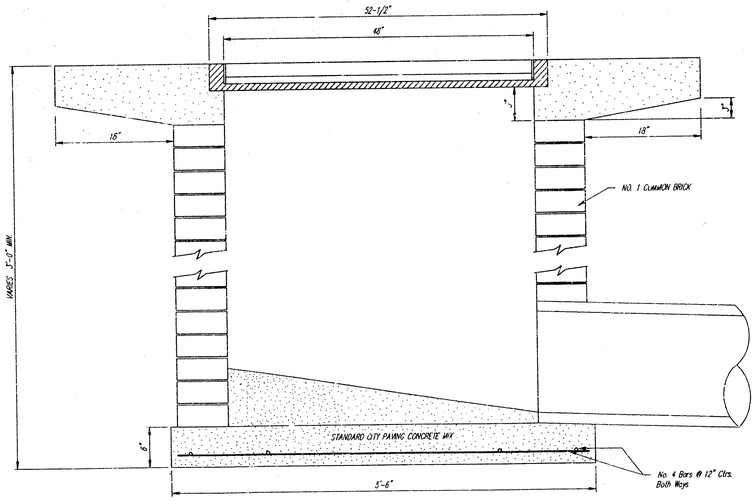

City of Wichita Standard
Drop Inlet
Fazoli's Restauant

BAUGHMAN COMPANY P. A.
ENGINEERING, SURVEYING, & PLANNING
316-262-7271 • 315 ELLIS • WICHITA, KANSAS 67211

PROJECT NUMBER				SHEET
625PPS (607861)				2 OF 2
DESIGN	DRAWN	APPROVED	DATE May 1996	SCALE

DETAILS\DROPINLT

2-1-8-91