STORMWATER & SANITARY SEWER IMPROVEMENTS

TO SERVE

Lot 2

The Dugan Centre Third Addition

Private Project No. 629 PPS (607861)

Michael E. Lindeback, P.E. City Engineer

Benchmark:

Square Cut on Top of
Curb East end of return at
SE. Corner of Dugan & Taft
ELEV. = 118.61 CITY DATUM
ELEV. = 1306.01 M.S.L.

Plus Cut at the NE.
Corner Dugan Centre 3rd
ELEV. = 131.26 CITY DATUM
ELEV. = 1318.66 M.S.L.

General Notes

1. Underground utility service lines and overhead utility pole lines are to be adjusted as necessary by others prior to construction unless the plans specifically call for their adjustment by the Contractor or unless the plans specifically identify a utility to be adjusted by its owner during construction. Existing utilities and their location, as shown on the plans, represent the best information obtainable for design. The Contractor will be required to work around existing utilities within the right-of-way which do not conflict with proposed construction.

2. The Contractor shall give all property owners and/or tenants of developed property abutting the construction of this project a minimum of five (5) days advance notice prior to start of construction.

3. The Contractor shall be responsible for preserving property irons. The Contractor will be required to re-establish any property irons which are damaged or destroyed by his construction operations. Such irons shall be re-established by a licensed land surveyor in accordance with state laws.

4. Contractor will be required to provide notice to utility companies a minimum of twenty-four (24) hours prior to any excavation, as follows:

   Kansas One-Call 687-2470

   The Contractor must notify the following in case of an emergency:

K.P.L. Gas Service Company	383-8650
Kansas Gas & Electric Company	383-8600
Cablevision	262-4270
or	263-2081
Southwestern Bell Telephone Company	1-571-2611
City of Wichita Water Dept.	268-4908
City of Wichita Sewer Maintenance	268-4071

5. Existing utilities and their locations, as shown on the plans, represent the best information obtainable for design. Location information has been obtained from the various utility companies and is either from company record drawings or company-provided field locations. The Contractor will be required to work around existing utilities which do not conflict with proposed construction. The Contractor shall verify all utility locations prior to construction of this project.

6. Contractor shall verify depth & location of existing utilities prior to construction.

7. Disturbed areas within the street right-of-way are to restored to the conditions existing prior to construction.

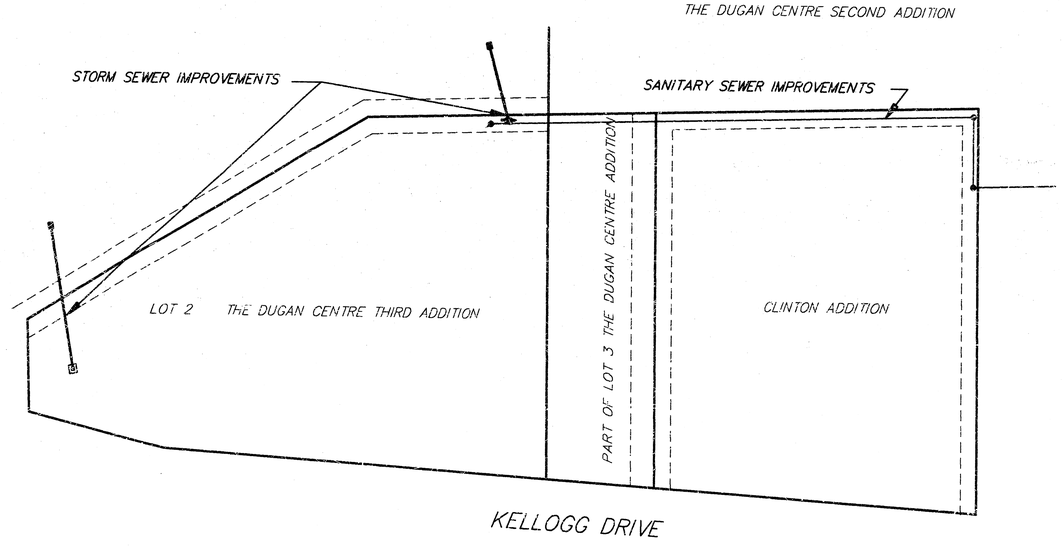

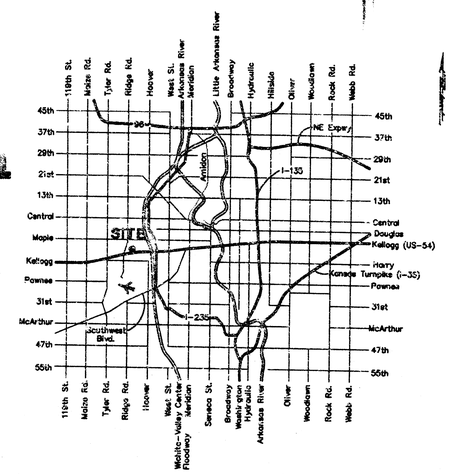

Location Map

Index of Sheets:

Title Sheet	1
SWS Plan/Profile	2
SS Plan/Profile	3
Manhole Detail	4
Drop Inlet Detail	5
Type IA Curb Inlet Detail	6

APPROVED AS NOTED
BY CITY ENGINEER OF WICHITA

Storm Sewers Gene Roth 5-28-96
Sanitary Sewers Gene Roth 5-28-96

NOTE TO CONTRACTORS

Inspection and testing for this project is to be provided by a Licensed Consulting Engineering Firm under contract with the Owner/Developer. Said inspection to be in accordance with the City of Wichita standard construction engineering practices and certified by a Licensed Professional Engineer. No work shall be performed in dedicated easements or public right-of-way by the Contractor without such inspection nor shall any work be commenced without written authorization by the City Engineer. All Construction and Materials shall comply with the City of Wichita Specifications and Standards (on file and available in the City Engineer's Office).

San. Sew. Booked
8-12-96
JKB

SWS
BOOKED
3-31-97
MCG
D-330

TIMOTHY R. AUSTIN
LICENSED
11496
KANSAS
PROFESSIONAL ENGINEER

SAN SWR
ASBUILT
7/22/96 JFB
BAUGHMAN CO.

BAUGHMAN COMPANY P. A.
ENGINEERING, SURVEYING, & PLANNING
316-262-7271 • 315 ELLIS • WICHITA, KANSAS 67211

BENCHMARK:
Square Cut on Top of
Curb East end of return at
SE. Corner of Dugan & Taft
ELEV. = 118.61 CITY DATUM
ELEV. = 1306.01 M.S.L.

Plus Cut at the NE.
Corner Dugan Centre 3rd
ELEV. = 131.26 CITY DATUM
ELEV. = 1318.66 M.S.L.

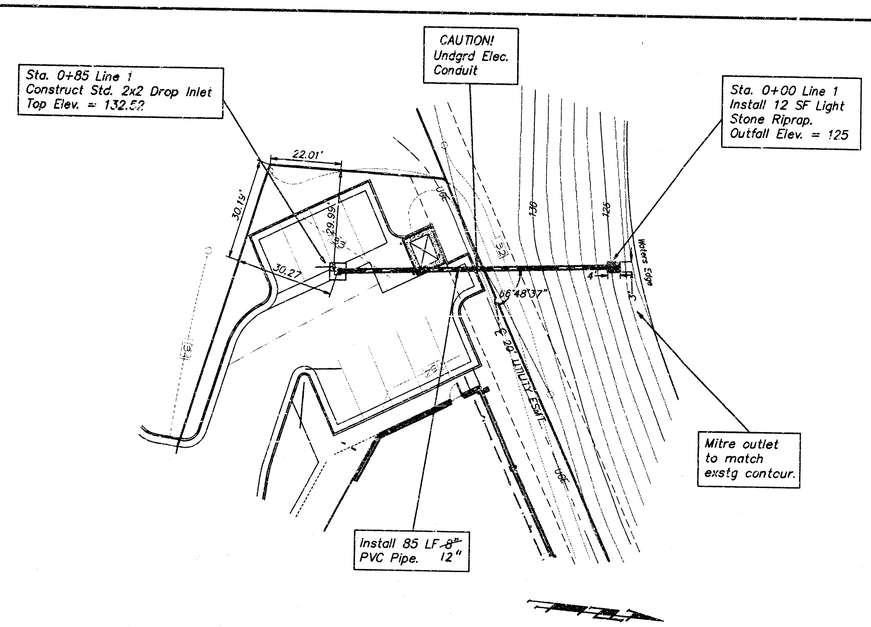

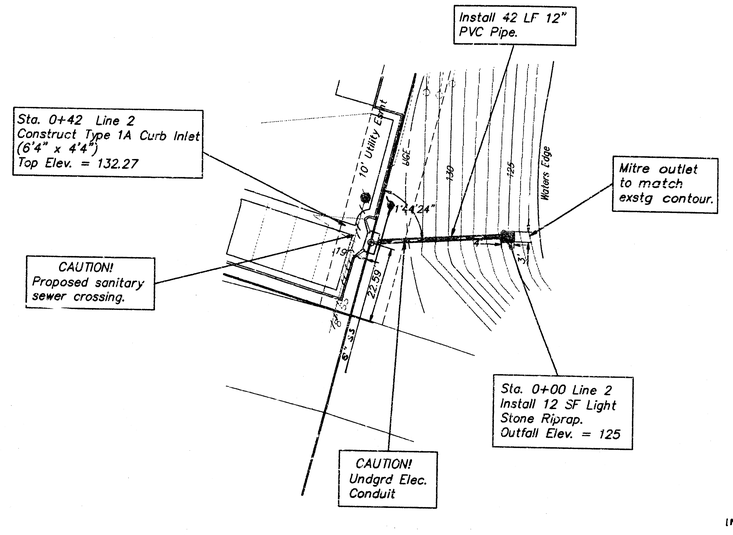

INSPECTOR : CHRIS EDWARDS
BAUGHMAN CO.

SCALE:
1"=20' horz.
1"=5' vert.

ASBUILT: 12/10/97
JEFF BRADLEY BAUGHMAN

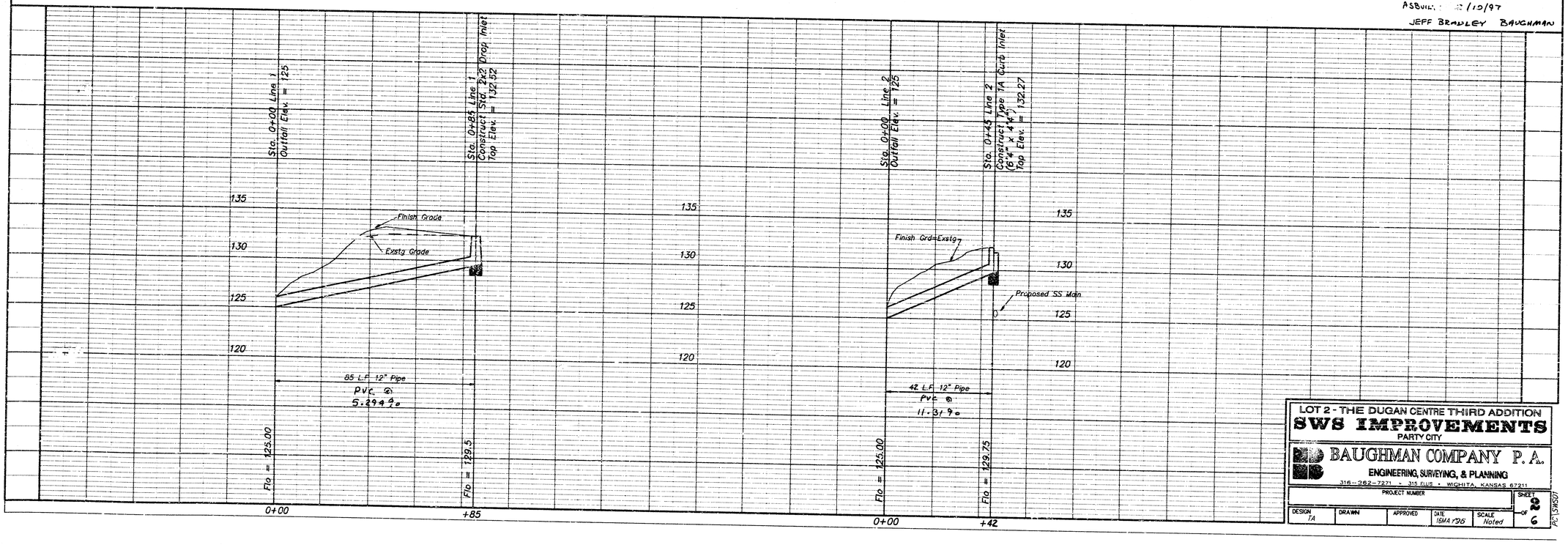

LOT 2 - THE DUGAN CENTRE THIRD ADDITION
SWS IMPROVEMENTS
PARTY CITY

BAUGHMAN COMPANY P.A.
ENGINEERING, SURVEYING, & PLANNING
316--262-7271 • 315 ELLIS • WICHITA, KANSAS 67211

PROJECT NUMBER					SHEET
DESIGN	DRAWN	APPROVED	DATE	SCALE	OF
TA			16MAY95	Noted	2 6

PC 13450?

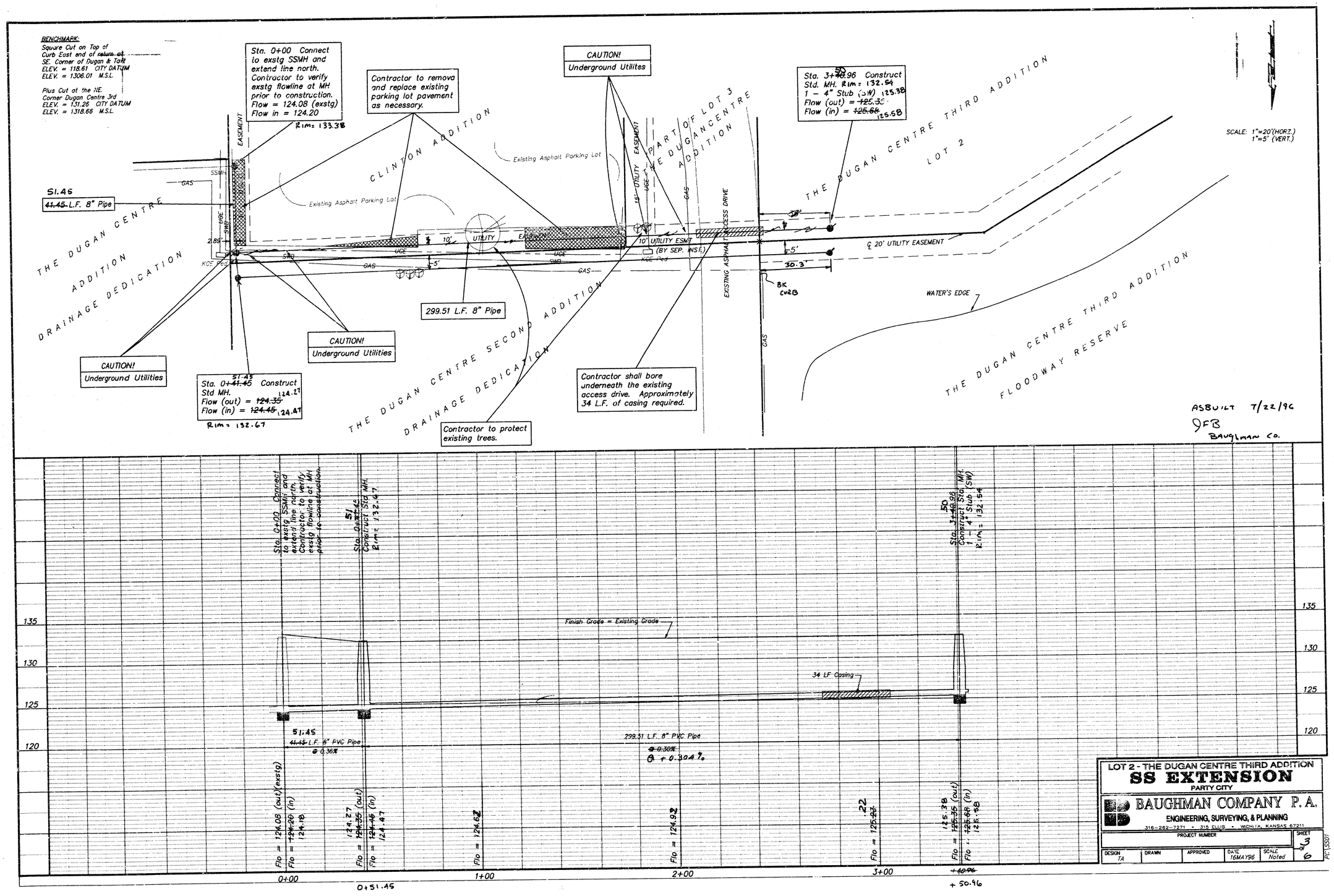
BENCHMARK:
Square Cut on Top of Curb East end of ~~return at~~ SE. Corner of Dugan & Taft
ELEV. = 118.61 CITY DATUM
ELEV. = 1306.01 M.S.L.
Plus Cut at the NE. Corner Dugan Centre 3rd
ELEV. = 131.26 CITY DATUM
ELEV. = 1318.66 M.S.L.
Sta. 0+00 Connect to exstg SSMH and extend line north. Contractor to verify exstg flowline at MH prior to construction. Flow = 124.08 (exstg) Flow in = 124.20
Rim= 133.38
Contractor to remova and replace existing parking lot pavement as necessary.
CAUTION! Underground Utilites
Sta. 3+~~40~~50.96 Construct Std. MH. Rim= 132.54 1 – 4" Stub (SW) 125.38 Flow (out) = ~~125.35~~ Flow (in) = ~~125.68~~ 125.58
SCALE: 1"=20'(HORZ.) 1"=5' (VERT.)
51.45
~~41.45~~ L.F. 8" Pipe
THE DUGAN CENTRE ADDITION DRAINAGE DEDICATION
CLINTON ADDITION
Existing Asphalt Parking Lot
PART OF LOT 3 THE DUGAN CENTRE ADDITION
THE DUGAN CENTRE THIRD ADDITION LOT 2
EASEMENT
GAS
SSMH
UGE
SWB
KGE Ped
10' UTILITY EASEMENT
10' UTILITY ESMT (BY SEP. INST.)
EXISTING ASPHALT ACCESS DRIVE
℄ 20' UTILITY EASEMENT
30.3'
BK CURB
WATER'S EDGE
299.51 L.F. 8" Pipe
CAUTION! Underground Utilities
CAUTION! Underground Utilities
Sta. 0+~~41.45~~ 51.45 Construct Std MH. Flow (out) = ~~124.35~~ 124.27 Flow (in) = ~~124.45~~ 124.47
Rim= 132.67
THE DUGAN CENTRE SECOND ADDITION DRAINAGE DEDICATION
Contractor shall bore underneath the existing access drive. Approximately 34 L.F. of casing required.
Contractor to protect existing trees.
THE DUGAN CENTRE THIRD ADDITION FLOODWAY RESERVE
ASBUILT 7/22/96
JFB
Baughman Co.
Sta. 0+00 Connect to exstg SSMH and extend line north. Contractor to verify exstg flowline at MH prior to construction.
51 Sta. 0+~~41.45~~ Construct Std MH. Rim= 132.67
50 Sta. 3+~~40.96~~ Construct Std MH. 1 – 4" Stub (SW) Rim= 132.54
Finish Grade = Existing Grade
34 LF Casing
135
130
125
120
51.45
~~41.45~~ L.F. 8" PVC Pipe @ 0.36%
299.51 L.F. 8" PVC Pipe @ ~~0.30%~~ @ +0.304%
Flo = 124.08 (out)(exstg)
Flo = ~~124.20~~ (in) 124.18
Flo = 124.27 (out)
Flo = ~~124.35~~ (in) 124.47
Flo = 124.62
Flo = 124.92
Flo = 125.22
Flo = 125.38 (out)
Flo = ~~125.35~~ (in) 125.58
0+00
0+51.45
1+00
2+00
3+00
~~+40.96~~
+50.96
LOT 2 - THE DUGAN CENTRE THIRD ADDITION
SS EXTENSION
PARTY CITY
BAUGHMAN COMPANY P.A.
ENGINEERING, SURVEYING, & PLANNING
316-262-7271 • 315 ELLIS • WICHITA, KANSAS 67211
PROJECT NUMBER
SHEET 3 OF 6
DESIGN TA
DRAWN
APPROVED
DATE 16MAY96
SCALE Noted
PC\SS01

SEWER APPURTENANCES DETAILS

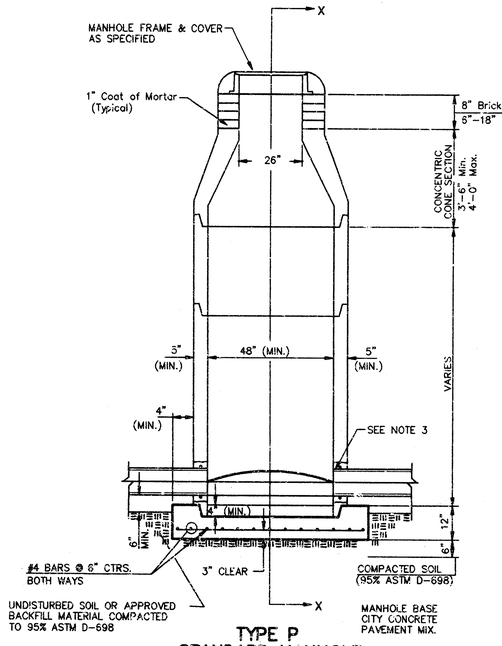

TYPE P
STANDARD MANHOLE

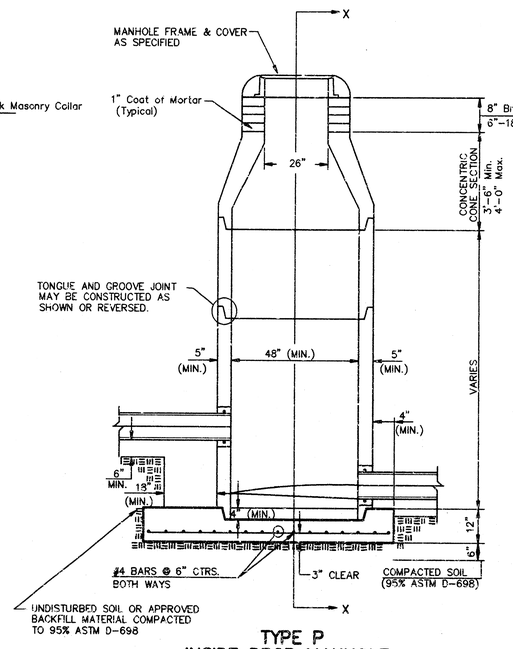

TYPE P
INSIDE DROP MANHOLE

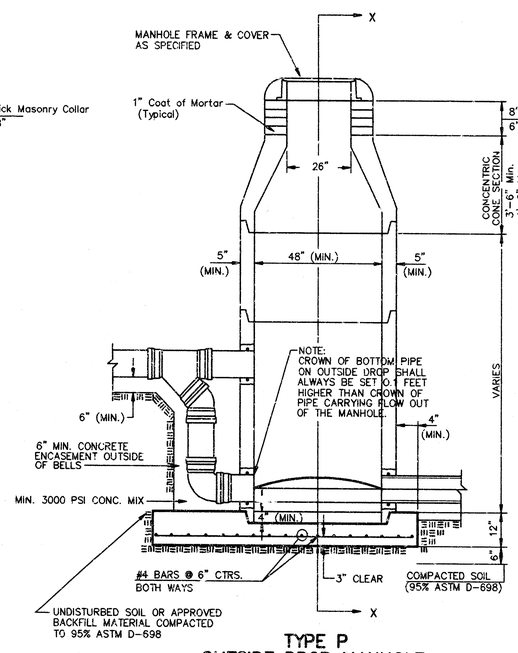

TYPE P
OUTSIDE DROP MANHOLE

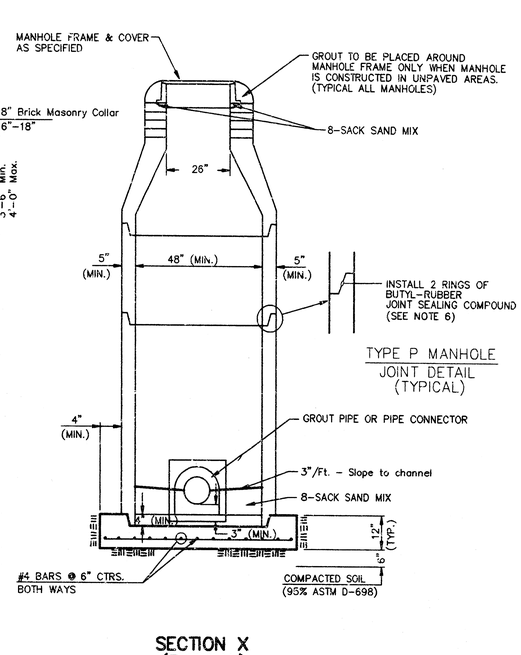

SECTION X
(TYPICAL)

GENERAL NOTES

PRECAST MANHOLE NOTES

1. ALL PRECAST CONCRETE MANHOLE SECTIONS SHALL CONFORM TO THE LATEST REVISIONS OF A.S.T.M. C478 AS MODIFIED BY THE SPECIFICATIONS.
2. NON-SHRINK GROUT SHALL BE NON-METALLIC TYPE.
3. APPROVED FLEXIBLE WATERSTOP GASKETS SHALL BE INSTALLED TO JOIN THE SEWER TO THE MANHOLE WALL WHEN A.B.S. COMPOSITE PIPE OR P.V.C. PIPE IS USED. FOR OTHER TYPES OF PIPE THE SEWER SHALL BE GROUTED IN PLACE WITH NON-SHRINK GROUT. THE SEWER PIPE SHALL BE SUPPORTED WITH CONCRETE ENCASEMENT A MINIMUM OF 3 FEET FROM THE MANHOLE WALL AND TO THE FIRST JOINT FOR V.C.P. SUCH THAT THE JOINT REMAINS FLEXIBLE.
4. ALL INSIDE SURFACES OF THE CONCRETE MANHOLE WHICH WOULD BE EXPOSED TO SEWER GAS SHALL BE COATED WITH 2 COATS THEMEC SERIES 66 HI-BUILD EPOXOLINE, DRY THICKNESS OF 8 MILS (MIN.)
5. EXTERIOR MANHOLE WALLS SHALL BE COATED WITH 1 COAT MOBILARMA 633 BITUMINOUS COATING.
6. JOINT SEALING COMPOUND SHALL BE KENT SEAL NO. 2 OR APPROVED EQUAL.
7. PRECAST MANHOLES SHALL BE SET AT LEAST 4 INCHES INTO THE MANHOLE BASE.
8. TOP OF MANHOLE FLOOR SLAB SHALL BE AT LEAST 3 INCHES BELOW THE FLOW LINE OF THE OUTLET PIPE TO INSURE SUFFICIENT MINIMUM THICKNESS OF SHAPED INVERT.
9. LIFTING HOLES SHALL BE FILLED WITH NON-SHRINK GROUT AND THE INTERIOR SURFACE COATED AS SPECIFIED.
10. MORTAR USED IN MASONRY CONSTRUCTION SHALL CONTAIN 8 SACKS OF CEMENT PER CUBIC YARD. CONCRETE USED IN MANHOLE BASES SHALL CONFORM TO THE REQUIREMENTS OF CONCRETE FOR CONCRETE PAVEMENT CONSTRUCTION AS SPECIFIED IN THE CITY STANDARD PAVING SPECIFICATIONS USING CITY CONCRETE PAVEMENT MIX WITHOUT AIR ENTRAINING ADMIXTURE. MORTAR SHALL BE PLACED AROUND THE MANHOLE RING AS SHOWN ON THE DRAWINGS WHEN MANHOLES ARE CONSTRUCTED IN UNPAVED AREAS. MANHOLES CONSTRUCTED WHERE PIPE SIZES ARE SMALLER THAN 24" SHALL HAVE AN INSIDE DIAMETER OF 4'. MANHOLES CONSTRUCTED WHERE PIPE SIZES ARE 24" OR LARGER SHALL HAVE AN INSIDE DIAMETER OF 5'. COMPLETED MANHOLE SHALL BE WITHOUT LEAKS AND WATER TIGHT.
11. REINFORCING STEEL SHALL BE INSTALLED IN THE MANHOLE BASES AND SHALL CONSIST OF NO. 4 BARS PLACED ON 6" CENTERS IN BOTH DIRECTIONS. THE MANHOLE BASE REINFORCEMENT SHALL BE PLACED AT LEAST 3" ABOVE THE BOTTOM OF THE MANHOLE BASE. ALL COSTS FOR FURNISHING AND INSTALLING REINFORCING STEEL SHALL BE INCLUDED IN THE UNIT PRICE BID FOR THE MANHOLE.
12. OPENINGS SHALL BE CUT INTO THE MANHOLE WALL WHEN OUTSIDE DROPS ARE CONSTRUCTED ON EXISTING MANHOLES. SUCH OPENINGS CUT INTO EXISTING MANHOLES SHALL BE AS SMALL AS PRACTICAL TO FACILITATE INSTALLING AND GROUTING THE NEW PIPE IN PLACE. WATERSTOP GASKETS SHALL BE USED WITH P.V.C. AND A.B.S. COMPOSITE PIPE. THE NEW PIPE SHALL BE GROUTED INTO THE OPENING USING AN APPROVED NONSHRINK GROUT FOR THE FULL MANHOLE WALL THICKNESS. THE EXTERIOR OF THE COMPLETED CONNECTION SHALL BE SEALED WITH AN APPROVED BITUMINOUS COATING SUCH THAT THE CONNECTION WILL BE WATER TIGHT. FLOOR OF MANHOLE SHALL BE MODIFIED TO FORM NEW FLOW CHANNEL FOR THE NEW CONNECTION AS INDICATED BY THE DRAWING. THIS WORK, INCLUDING MODIFICATION OF MANHOLE FLOOR, SHALL BE PAID FOR AT THE UNIT PRICE BID FOR OUTSIDE DROP STACK CONSTRUCTED ON EXISTING MANHOLE.
13. THE FLOORS OF ALL MANHOLES SHALL BE SHAPED WITH FLOW CHANNELS SUCH THAT THE MANHOLES WILL BE SELF CLEANING AND FREE OF AREAS WHERE SOLIDS COULD BE DEPOSITED AS SEWAGE FLOWS THROUGH THE MANHOLE FROM ALL INLET PIPES TO THE OUTLET PIPE. FLOW CHANNELS SHALL BE FORMED TO MATCH THE BOTTOM HALVES OF THE INFLOWING PIPES AND THE OUTFLOWING PIPE AS SHOWN BY THE DRAWINGS EXCEPT FOR INSIDE DROP MANHOLES. FLOW CHANNELS FOR INSIDE DROP MANHOLES SHALL BE CONSTRUCTED AS INDICATED BY THE DRAWING. MANHOLE FLOORS SHALL HAVE SLOPES OF 3 INCHES PER FOOT IN THE AREAS OUTSIDE OF THE FLOW CHANNELS SLOPED TOWARD THE FLOW CHANNELS. PIPES LAID THROUGH MANHOLES SHALL HAVE THE TOP HALF REMOVED TO NEAT LINES FOR THE FULL INSIDE DIAMETER OF THE MANHOLE. MANHOLE FLOORS SHALL THEN BE SHAPED AROUND THE BOTTOM HALF OF THE PIPE WHICH FORMS THE FLOW CHANNEL.
14. PIPES INSTALLED WITHIN THE EXCAVATION MADE FOR THE MANHOLE SHALL BE CRADLED WITH CONCRETE TO THE LIMITS OF THE MANHOLE EXCAVATION. WHEN CLAY PIPE IS USED, THE CRADLE SHALL EXTEND TO THE FIRST JOINT OUTSIDE THE MANHOLE. THE CRADLE SHALL BE TERMINATED AT THE CLAY PIPE JOINT IN A MANNER WHICH WILL MAINTAIN THE FLEXIBILITY OF THE JOINT. COST OF CRADLE WITHIN MANHOLE EXCAVATION OR TO CLAY PIPE JOINTS ADJACENT TO MANHOLE SHALL BE INCLUDED IN THE UNIT PRICE BID FOR THE MANHOLE.
15. MANHOLE COVER CASTINGS AND MANHOLE FRAME CASTINGS SHALL CONFORM TO THE REQUIREMENTS AS INDICATED IN THE STANDARD SPECIFICATIONS AND AS SHOWN IN THE STANDARD DETAIL DRAWING.
16. THE VERTICAL DROP IN INSIDE DROP MANHOLES SHALL NOT EXCEED 2' FOR INFLOWING PIPES SIZED 12" OR SMALLER AND 2' FOR INFLOWING PIPES LARGER THAN 12". THE CROWNS OF INFLOWING PIPES SHALL NEVER BE SET LOWER THAN THE CROWN OF THE OUTFLOWING PIPE.
17. STANDARD MANHOLES AND STANDARD INSIDE DROP MANHOLES SHALL BE BID AS STANDARD MANHOLES FOR THE TYPE AND DIAMETER INDICATED. OUTSIDE DROP MANHOLES SHALL BE BID AS STANDARD OUTSIDE DROP MANHOLES FOR THE TYPE AND DIAMETER INDICATED. ALL MANHOLE DIAMETERS WILL BE 4' UNLESS INDICATED OTHERWISE.
18. A BRICK MASONRY COLLAR SHALL BE INSTALLED BETWEEN THE CAST IRON FRAME AND THE CONCENTRIC CONE. THE COLLAR WILL HAVE 8" WALLS AND A VERTICAL HEIGHT OF 6" MINIMUM AND 18" MAXIMUM. A 1" COAT OF MORTAR WILL BE PLASTERED ON THE OUTSIDE OF THE COLLAR. THE USE OF PRE-CAST CONCRETE SPACERS FOR MANHOLE TOP ADJUSTMENT IS ALSO ALLOWED.

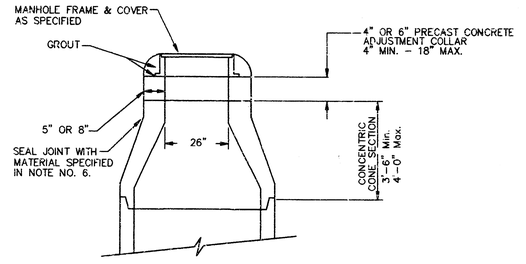

ALTERNATE CONSTRUCTION
IN UNPAVED AREAS

CITY OF WICHITA
STD. MANHOLE DETAILS
& SEWER APPURTENANCES DETAILS

BAUGHMAN COMPANY P.A.
ENGINEERING, SURVEYING, & PLANNING
316-262-7221 • 315 EWIS • WICHITA, KANSAS 67211

PROJECT NUMBER				SHEET
DESIGN	DRAWN NOV.93	APPROVED	DATE	SCALE	OF 6

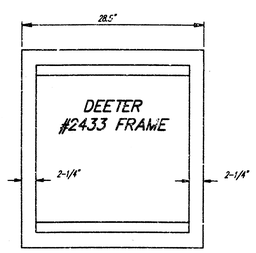

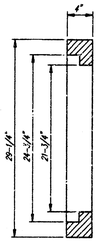

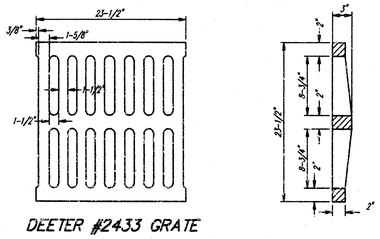

DEETER #2433 GRATE

NOTE: Grates shall be imprinted on the top surface with "CITY OF WICHITA" using letters at least 1" in height. Other marking methods may be approved by the engineer.

24" x 24" Frame and Grate Detail

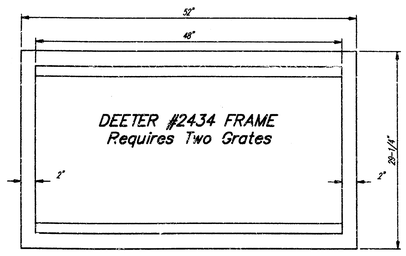

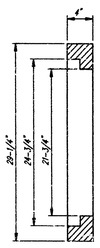

Double 24" x 24" Frame Detail

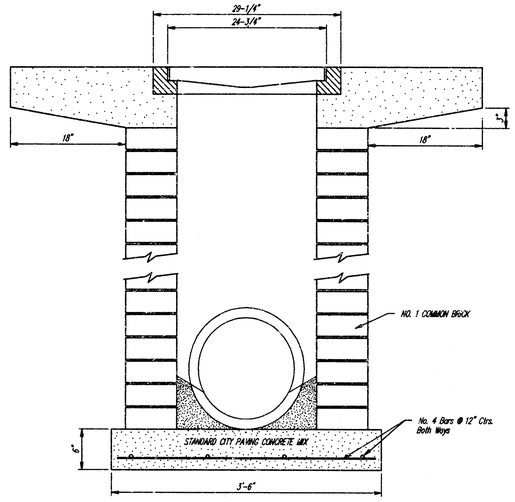

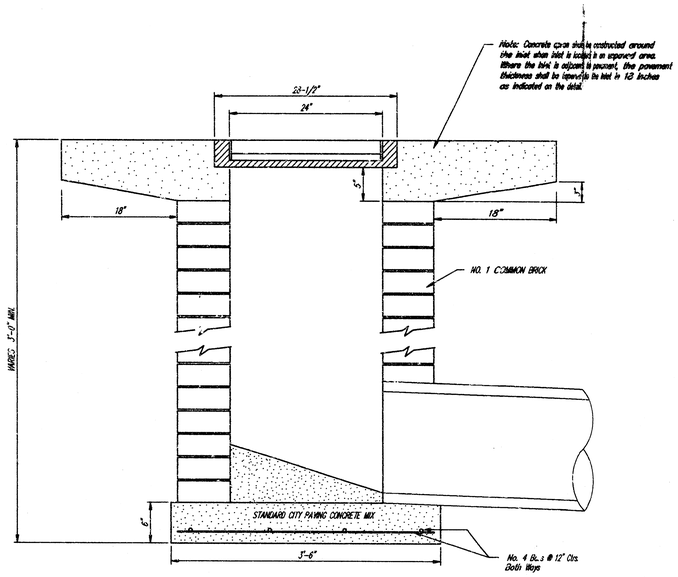

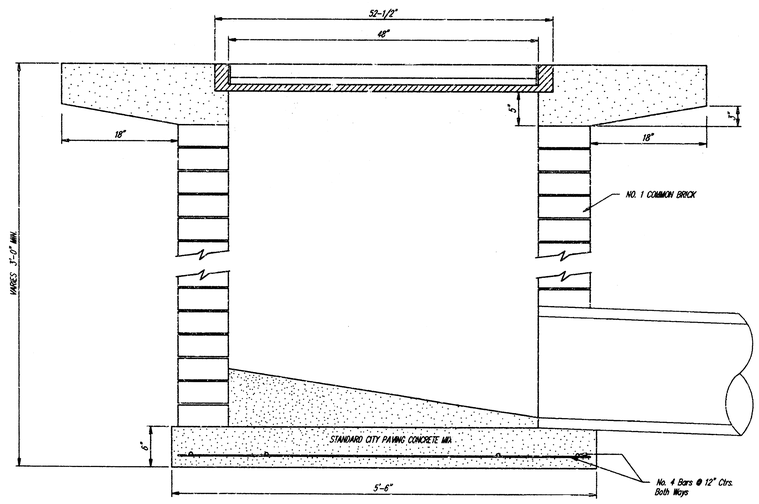

City of Wichita Standard
Drop Inlet

BAUGHMAN COMPANY P. A.
ENGINEERING, SURVEYING, & PLANNING
316-262-7271 • 315 ELLIS • WICHITA, KANSAS 67211

PROJECT NUMBER

DESIGN	DRAWN	APPROVED	DATE	SCALE

SHEET 5 of 6

DETAILS DRAWING

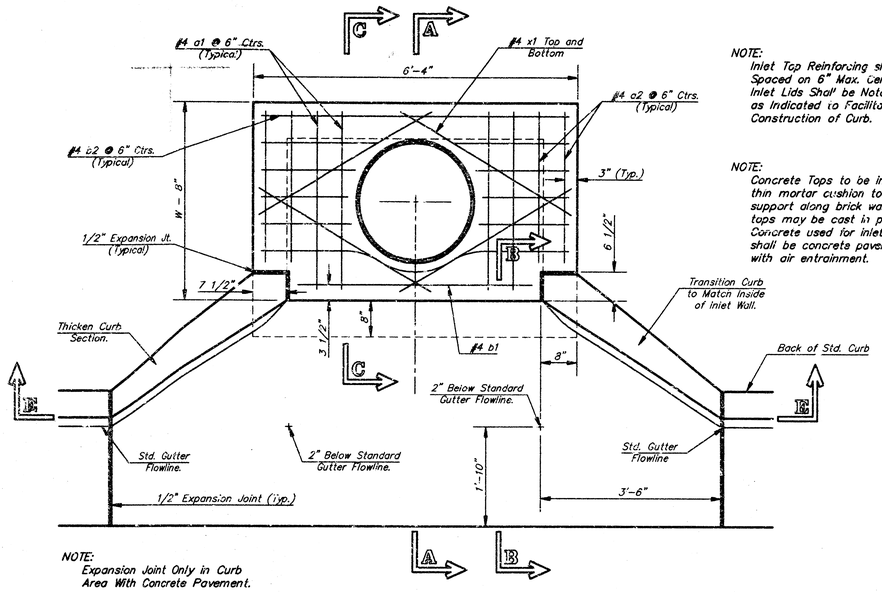

NOTE:
Expansion Joint Only in Curb Area With Concrete Pavement.

PLAN

NOTE:
Inlet Top Reinforcing shall be Spaced on 6" Max. Centers. Inlet Lids Shall be Notched Out as Indicated to Facilitate Construction of Curb.

NOTE:
Concrete Tops to be installed on thin mortar cushion to insure full support along brick walls. Concrete tops may be cast in place or precast. Concrete used for inlet construction shall be concrete pavement mix with air entrainment.

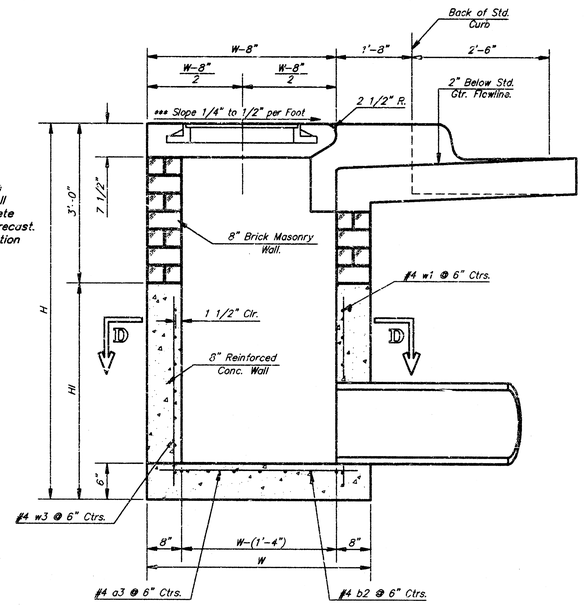

SECTION A-A

***NOTE: Slope of inlet tops to Match Sidewalk or Parking Slopes within Limits Indicated.

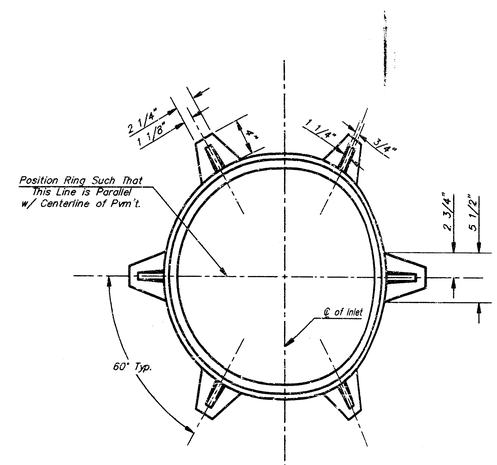

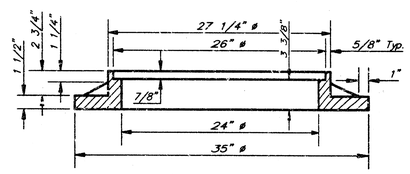

MANHOLE RING AND COVER

Weight = 180 Lbs.

*See City of Wichita Standard Manhole Ring and Cover Detail Sheet for Cover Details to Be Used With Inlet Frame.

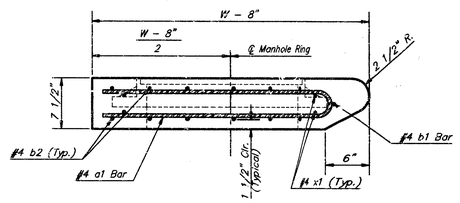

SECTION A-A

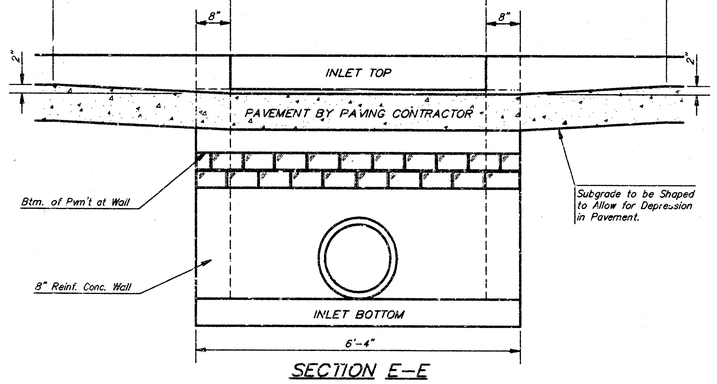

SECTION E-E

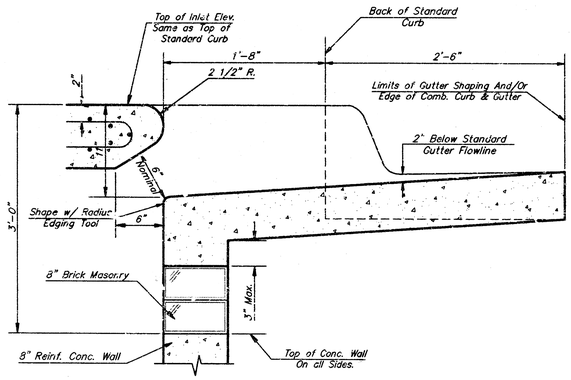

SECTION B-B

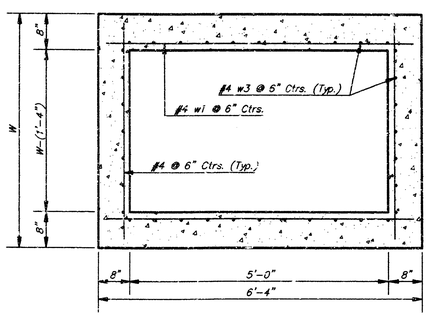

SECTION D-D

NOTE: Contractor shall have the option of constructing 8" brick masonry walls between the concrete inlet base and top on this inlet when W=6'-4" and H=7'-0" or less.

Additional curb and gutter construction necessary to connect set-back inlet to pavement will be paid for at the unit price bid for each inlet hookup.

Inlet invert shall be shaped with 8 sack sand mix concrete to create flow channels and to increase hydraulic efficiency such that the inlet will be self-cleaning between all inlet and/or outlet pipes.

The ends of all pipes installed in inlets shall be cut off flush with the inside face of the inlet wall

PRECAST SLAB AND FLOOR REINFORCING

		W = 4'-4"		W = 5'-4"		W = 6'-4"		W = 7'-4"		W = 8'-4"	
MARK	SIZE	NO.	LENGTH	NO.	LENGTH	NO.	LENGTH	NO.	LENGTH	NO.	LENGTH
* a1	#4	6	6'-7"	6	8'-7"	5	10'-7"	6	12'-7"	6	14'-7"
a2	#4	4	6'-0"	4	8'-0"	4	10'-0"	4	12'-0"	4	14'-0"
a3	#4	13	4'-1"	13	5'-1"	13	6'-1"	13	7'-1	13	8'-1"
b1	#4	1	4'-9"	1	4'-9"	1	4'-9"	1	5'-9"	1	6'-9"
* b2	#4	23	6'-1"	29	6'-1"	35	6'-1"	41	6'-1"	47	6'-1"
x1	#4	8	3'-10"	8	4'-2"	8	4'-6"	8	4'-10"	8	5'-2"

WALL REINFORCING

		W = 4'-4"		W = 5'-4"		W = 6'-4"		W = 7'-4"		W = 8'-4"	
MARK	SIZE	NO.	LENGTH	NO.	LENGTH	NO.	LENGTH	NO.	LENGTH	NO.	LENGTH
w1	#4	①	6'-1"	①	6'-1"	①	6'-1"	①	6'-1"	①	6'-1"
w2	#4	①	4'-1"	①	5'-1"	①	6'-1"	①	7'-1"	①	8'-1"
w3	#4	32	②	36	②	40	②	44	②	48	②

* Field Bend or Cut Reinforcing as Required for Clearance.
① 4 (HI - 12") (HI - 21") Rounded down to nearest 0.5'
② HI - 3"

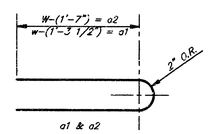

BENDING DIAGRAM

STANDARD CURB INLET PRECAST TOPS

W	PRE-CAST TOP SIZE	PIPE SIZE	CU. YD. CONC.
4'-4"	3'-2" x 6'-4" x 7 1/2"	21" & SMALLER	0.38±
5'-4"	4'-8" x 6'-4" x 7 1/2"	24" & 30"	0.51±
6'-4"	5'-8" x 6'-4" x 7 1/2"	36" & 42"	0.64±
7'-4"	6'-8" x 6'-4" x 7 1/2"	48" & 54"	0.77±
8'-4"	7'-8" x 6'-4" x 7 1/2"	60" & 66"	0.90±

Revised - Feb. 16, 1989

CITY OF WICHITA STANDARD TYPE 1A

Curb Inlet Details

INLET OPENING = 6" x 5'-0"

BAUGHMAN COMPANY P. A.
ENGINEERING, SURVEYING, & PLANNING
316-262-7271 • 315 DUS • WICHITA, KANSAS 67...

PROJECT NUMBER				SHEET
				6 OF 6
DESIGN C.O.W.	DRAWN Staff	APPROVED	DATE	SCALE None

Typ1A-5

5-A-1-AF

STORMWATER & SANITARY SEWER IMPROVEMENTS

TO SERVE

Lot 2

The Dugan Centre Third Addition

Private Project No. 629 PPS (607861)

Michael E. Lindeback, P.E. City Engineer

Benchmark:

Square Cut on Top of
Curb East end of return at
SE. Corner of Dugan & Taft
ELEV. = 118.61 CITY DATUM
ELEV. = 1306.01 M.S.L.

Plus Cut at the NE.
Corner Dugan Centre 3rd
ELEV. = 131.26 CITY DATUM
ELEV. = 1318.66 M.S.L.

General Notes

1. Underground utility service lines and overhead utility pole lines are to be adjusted as necessary by others prior to construction unless the plans specifically call for their adjustment by the Contractor or unless the plans specifically identify a utility to be adjusted by its owner during construction. Existing utilities and their location, as shown on the plans, represent the best information obtainable for design. The Contractor will be required to work around existing utilities within the right-of-way which do not conflict with proposed construction.
2. The Contractor shall give all property owners and/or tenants of developed property abutting the construction of this project a minimum of five (5) days advance notice prior to start of construction.
3. The Contractor shall be responsible for preserving property irons. The Contractor will be required to re-establish any property irons which are damaged or destroyed by his construction operations. Such irons shall be re-established by a licensed land surveyor in accordance with state laws.
4. Contractor will be required to provide notice to utility companies a minimum of twenty-four (24) hours prior to any excavation, as follows:

   Kansas One-Call 687-2470

   The Contractor must notify the following in case of an emergency:

K.P.L. Gas Service Company	383-8650
Kansas Gas & Electric Company	383-8600
Cablevision	262-4270
or	263-2061
Southwestern Bell Telephone Company	1-571-2611
City of Wichita Water Dept.	268-4908
City of Wichita Sewer Maintenance	268-4071

5. Existing utilities and their locations, as shown on the plans, represent the best information obtainable for design. Location information has been obtained from the various utility companies and is either from company record drawings or company-provided field locations. The Contractor will be required to work around existing utilities which do not conflict with proposed construction. The Contractor shall verify all utility locations prior to construction of this project.
6. Contractor shall verify depth & location of existing utilities prior to construction.
7. Disturbed areas within the street right-of-way are to restored to the conditions existing prior to construction.

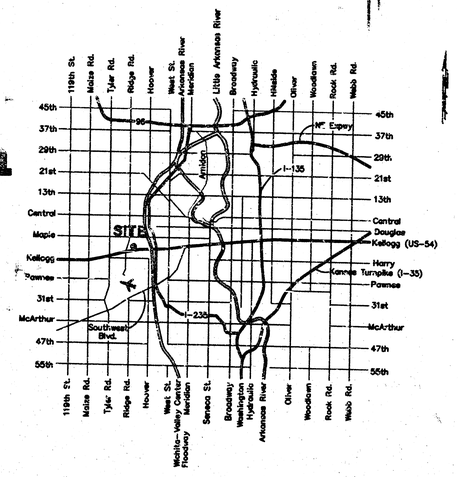

Location Map

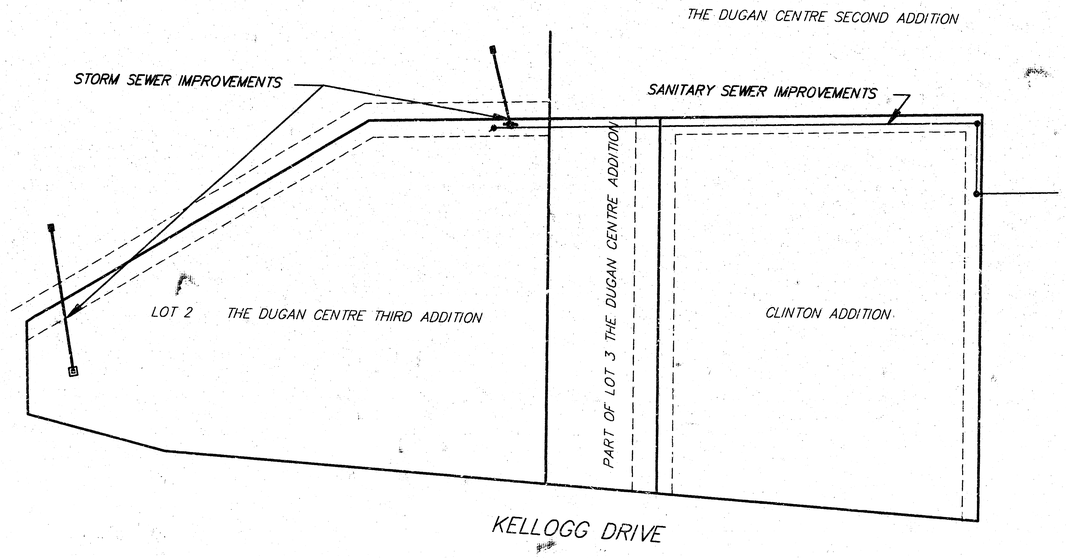

Index of Sheets:

Title Sheet	1
SWS Plan/Profile	2
SS Plan/Profile	3
Manhole Detail	4
Drop Inlet Detail	5
Type IA Curb Inlet Detail	6

APPROVED AS NOTED
BY CITY ENGINEER OF WICHITA

Storm Sewers Gene Roth 5-28-96
Sanitary Sewers Gene Roth 5-28-96

NOTE TO CONTRACTORS

Inspection and testing for this project is to be provided by a Licensed Consulting Engineering Firm under contract with the Owner/Developer. Said inspection to be in accordance with the City of Wichita standard construction engineering practices and certified by a Licensed Professional Engineer. No work shall be performed in dedicated easements or public right-of-way by the Contractor without such inspection nor shall any work be commenced without written authorization by the City Engineer. All Construction and Materials shall comply with the City of Wichita Specifications and Standards (on file and available in the City Engineer's Office).

San. Sew. Booked
8-12-96
JKB

SWS
BOOKED
3-31-97
MCG
D-330

TIMOTHY R. AUSTIN
LICENSED
11496
KANSAS
PROFESSIONAL ENGINEER

SAN SWR
ASBUILT
7/22/96 JFB
BAUGMAN CO.

BAUGHMAN COMPANY P.A.
ENGINEERING, SURVEYING, & PLANNING
316-262-7271 • 315 ELLIS • WICHITA, KANSAS 67211

BENCHMARK:
Square Cut on Top of Curb East end of return at SE. Corner of Dugan & Toft
ELEV. = 118.61 CITY DATUM
ELEV. = 1306.01 M.S.L.

Plus Cut at the NE. Corner Dugan Centre 3rd
ELEV. = 131.26 CITY DATUM
ELEV. = 1318.66 M.S.L.

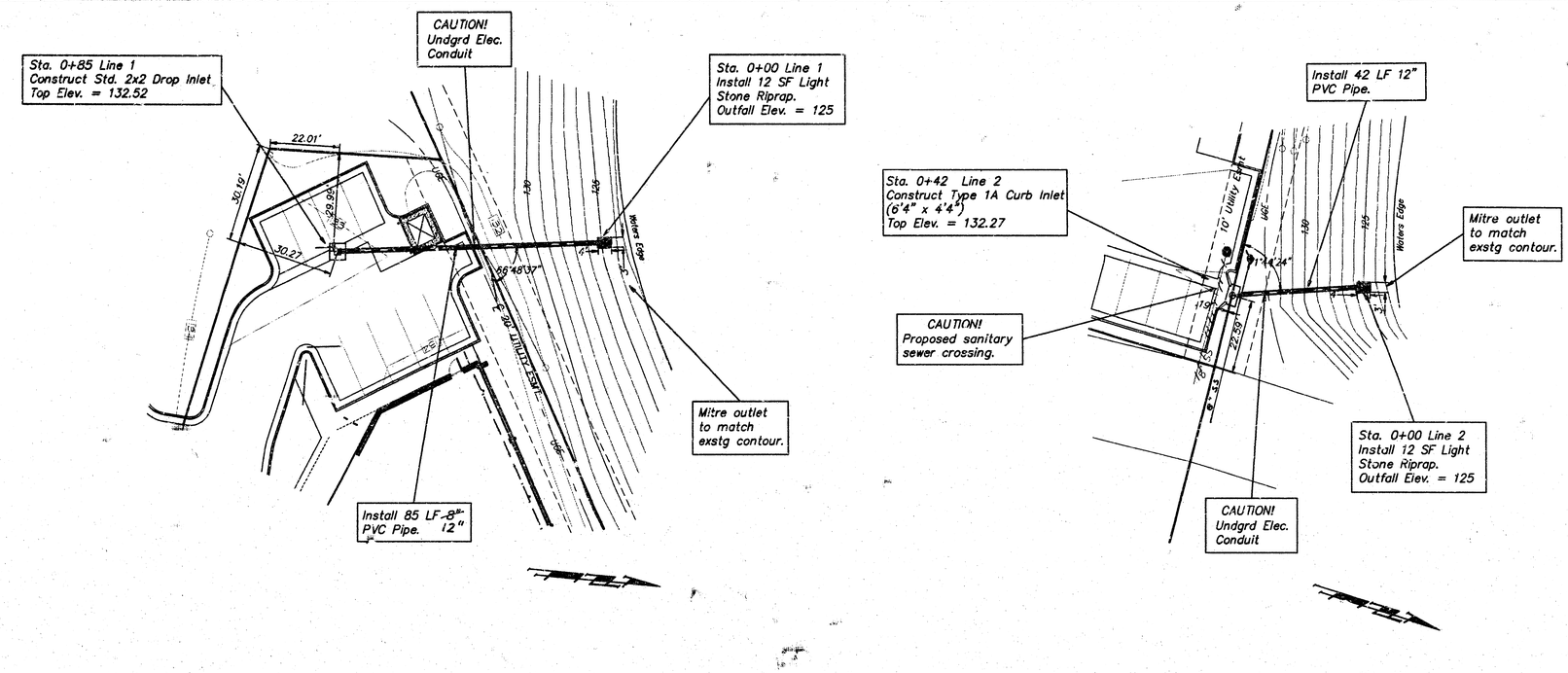

INSPECTOR: CHRIS EDWARDS
BAUGHMAN CO.

SCALE:
1"=20' horz.
1"=5' vert.

ASBUILT: 2/10/97
JEFF BRADLEY BAUGHMAN

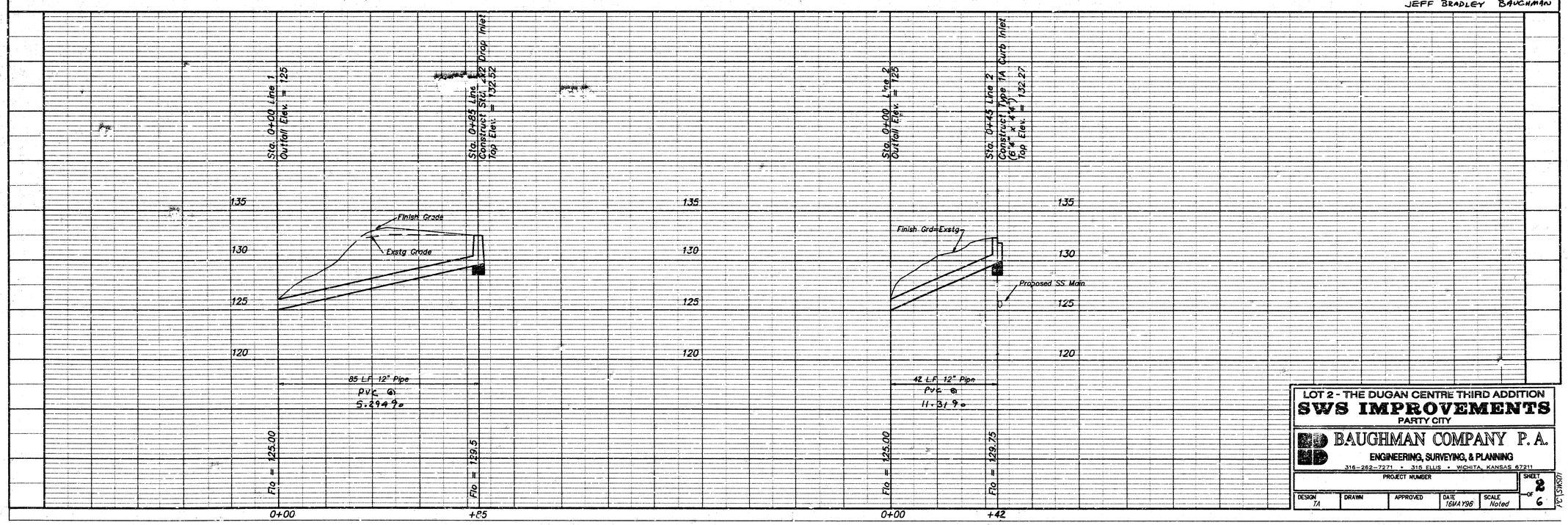

LOT 2 - THE DUGAN CENTRE THIRD ADDITION
SWS IMPROVEMENTS
PARTY CITY

BAUGHMAN COMPANY P.A.
ENGINEERING, SURVEYING, & PLANNING
316-262-7271 • 315 ELLIS • WICHITA, KANSAS 67211

PROJECT NUMBER					SHEET 2 OF 6
DESIGN TA	DRAWN	APPROVED	DATE 16MAY96	SCALE Noted	

PC\SWS01

BENCHMARK:
Square Cut on Top of Curb East end of return at SE. Corner of Dugan & Tot
ELEV. = 118.61 CITY DATUM
ELEV. = 1306.01 M.S.L.

Plus Cut at the NE.
Corner Dugan Cen're 3rd
ELEV. = 131.26 CITY DATUM
ELEV. = 1318.66 M.S.L.

Sta. 0+00 Connect to exstg SSMH and extend line north. Contractor to verify exstg flowline at MH prior to construction.
Flow = 124.08 (exstg)
Flow in = 124.20
Rim= 133.38

Contractor to remova and replace existing parking lot pavement as necessary.

CAUTION! Underground Utilites

Sta. 3+~~50~~ 49.96 Construct Std. MH. Rim = 132.54
1 - 4" Stub (SW) ~~125.38~~ 125.58
Flow (out) = ~~125.35~~
Flow (in) = ~~125.68~~ 125.58

SCALE 1"=20'(HORZ.) 1"=5' (VERT.)

51.45
~~41.45~~ L.F. 8" Pipe

CAUTION! Underground Utilities

Sta. 0+~~41.45~~ 51.45 Construct Std MH.
Flow (out) = ~~124.35~~ 124.27
Flow (in) = ~~124.45~~ 124.47
Rim= 132.67

CAUTION! Underground Utilities

299.51 L.F. 8" Pipe

Contractor shall bore underneath the existing access drive. Approximately 34 L.F. of casing required.

Contractor to protect existing trees.

ASBUILT 7/22/96
9FB
Baughman Co.

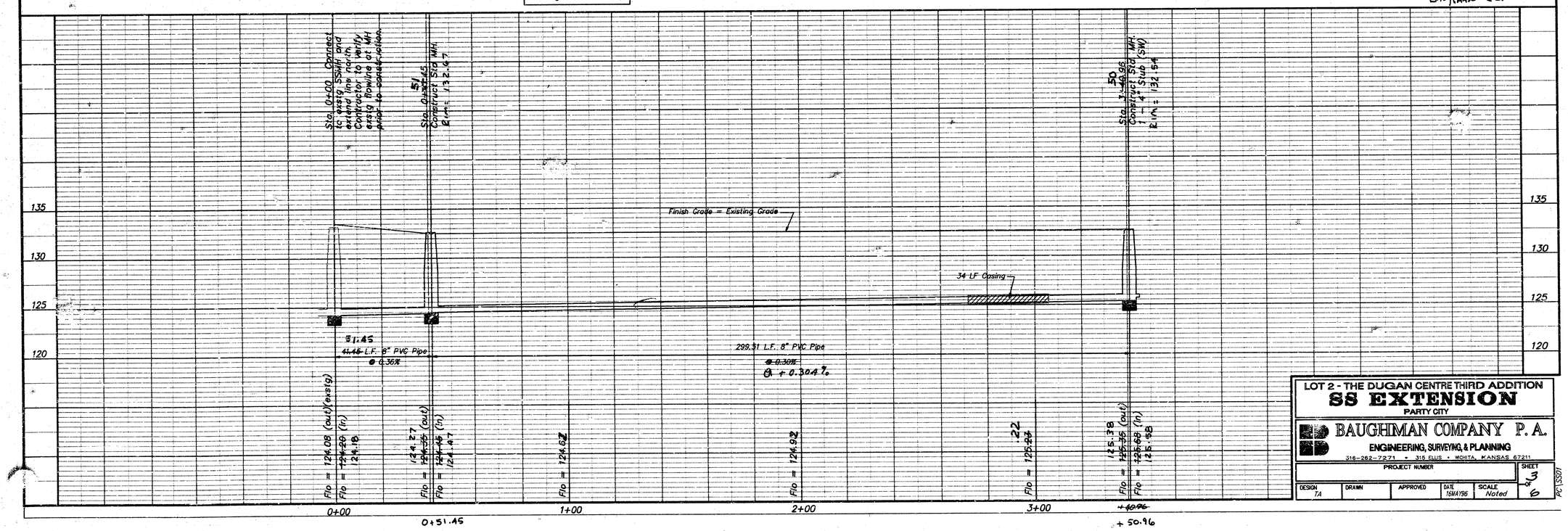

LOT 2 - THE DUGAN CENTRE THIRD ADDITION
SS EXTENSION
PARTY CITY

BAUGHMAN COMPANY P.A.
ENGINEERING, SURVEYING, & PLANNING
316-262-7271 • 315 ELLIS • WICHITA, KANSAS 67211

PROJECT NUMBER					SHEET
DESIGN TA	DRAWN	APPROVED	DATE 16MAY96	SCALE Noted	3 of 6

PC\SS01

SEWER APPURTENANCES DETAILS

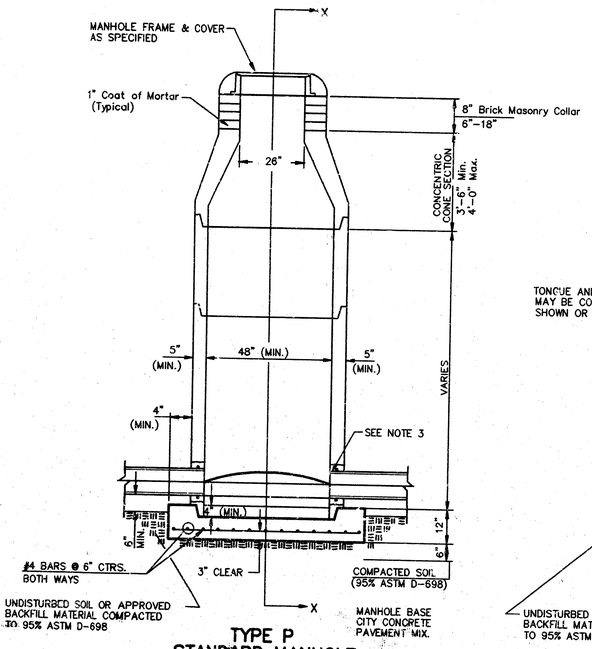

TYPE P STANDARD MANHOLE

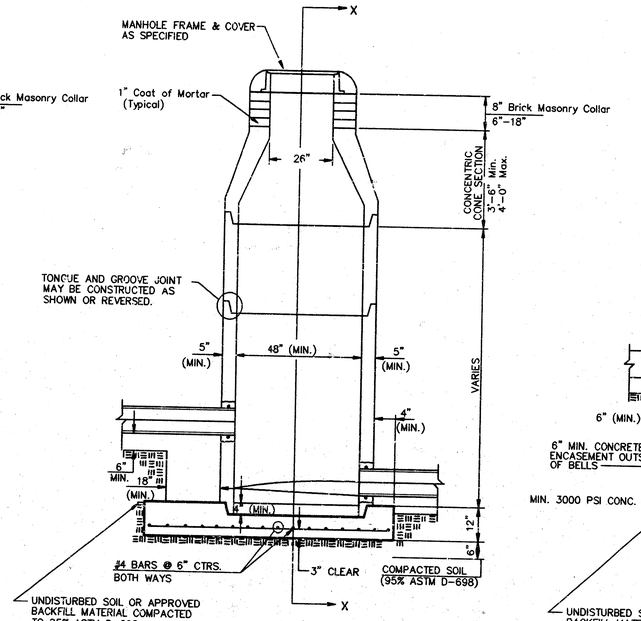

TYPE P INSIDE DROP MANHOLE

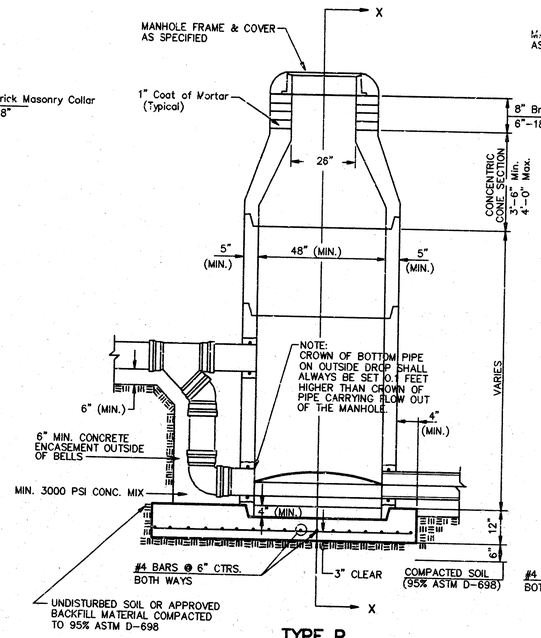

TYPE P OUTSIDE DROP MANHOLE

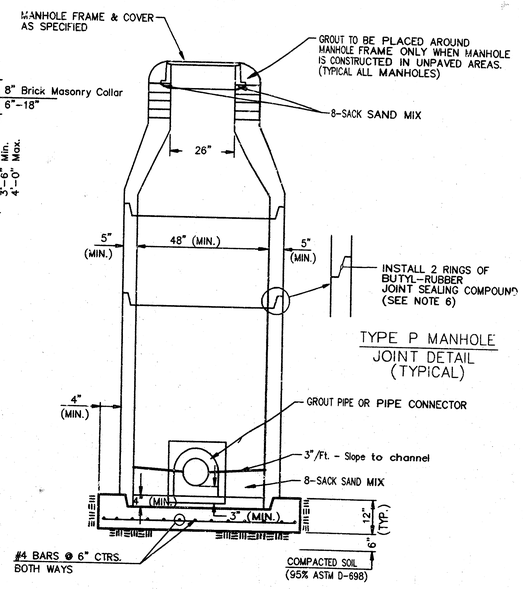

TYPE P MANHOLE JOINT DETAIL (TYPICAL)

SECTION X (TYPICAL)

GENERAL NOTES

PRECAST MANHOLE NOTES

1. ALL PRECAST CONCRETE MANHOLE SECTIONS SHALL CONFORM TO THE LATEST REVISIONS OF A.S.T.M. C478 AS MODIFIED BY THE SPECIFICATIONS.
2. NON-SHRINK GROUT SHALL BE NON-METALLIC TYPE.
3. APPROVED FLEXIBLE WATERSTOP GASKETS SHALL BE INSTALLED TO JOIN THE SEWER TO THE MANHOLE WALL WHEN A.B.S. COMPOSITE P.V.C. OR P.V.C. PIPE IS USED. FOR OTHER TYPES OF PIPE THE SEWER SHALL BE GROUTED IN PLACE WITH NON-SHRINK GROUT. THE SEWER PIPE SHALL BE SUPPORTED WITH CONCRETE ENCASEMENT A MINIMUM OF 3 FEET FROM THE MANHOLE WALL AND TO THE FIRST JOINT FOR V.C.P. SUCH THAT THE JOINT REMAINS FLEXIBLE.
4. ALL INSIDE SURFACES OF THE CONCRETE MANHOLE WHICH WOULD BE EXPOSED TO SEWER GAS SHALL BE COATED WITH 2 COATS TNEMEC SERIES 66 HI-BUILD EPOXOLINE, DRY THICKNESS OF 8 MILS (MIN.)
5. EXTERIOR MANHOLE WALLS SHALL BE COATED WITH 1 COAT MOBILARMA 633 BITUMINOUS COATING.
6. JOINT SEALING COMPOUND SHALL BE KENT SEAL NO. 2 OR APPROVED EQUAL.
7. PRECAST MANHOLES SHALL BE SET AT LEAST 4 INCHES INTO THE MANHOLE BASE.
8. TOP OF MANHOLE FLOOR SLAB SHALL BE AT LEAST 3 INCHES BELOW THE FLOW LINE OF THE OUTLET PIPE TO INSURE SUFFICIENT MINIMUM THICKNESS OF SHAPED INVERT.
9. LIFTING HOLES SHALL BE FILLED WITH NON-SHRINK GROUT AND THE INTERIOR SURFACE COATED AS SPECIFIED.
10. MORTAR USED IN MASONRY CONSTRUCTION SHALL CONTAIN 8 SACKS OF CEMENT PER CUBIC YARD. CONCRETE USED IN MANHOLE BASES SHALL CONFORM TO THE REQUIREMENTS OF CONCRETE FOR CONCRETE PAVEMENT CONSTRUCTION AS SPECIFIED IN THE CITY STANDARD PAVING SPECIFICATIONS USING CITY CONCRETE PAVEMENT MIX WITHOUT AIR ENTRAINING ADMIXTURE. MORTAR SHALL BE PLACED AROUND THE MANHOLE RING AS SHOWN ON THE DRAWINGS WHEN MANHOLES ARE CONSTRUCTED IN UNPAVED AREAS. MANHOLES CONSTRUCTED WHERE PIPE SIZES ARE SMALLER THAN 24" SHALL HAVE AN INSIDE DIAMETER OF 4'. MANHOLES CONSTRUCTED WHERE PIPE SIZES ARE 24" OR LARGER SHALL HAVE AN INSIDE DIAMETER OF 5'. COMPLETED MANHOLE SHALL BE WITHOUT LEAKS AND WATER TIGHT.
11. REINFORCING STEEL SHALL BE INSTALLED IN THE MANHOLE BASES AND SHALL CONSIST OF NO. 4 BARS PLACED ON 5" CENTERS IN BOTH DIRECTIONS. THE MANHOLE BASE REINFORCEMENT SHALL BE PLACED AT LEAST 3" ABOVE THE BOTTOM OF THE MANHOLE BASE. ALL COSTS FOR FURNISHING AND INSTALLING REINFORCING STEEL SHALL BE INCLUDED IN THE UNIT PRICE BID FOR THE MANHOLE.
12. OPENINGS SHALL BE CUT INTO THE MANHOLE WALL WHEN OUTSIDE DROPS ARE CONSTRUCTED ON EXISTING MANHOLES. SUCH OPENINGS CUT INTO EXISTING MANHOLES SHALL BE AS SMALL AS PRACTICAL TO FACILITATE INSTALLING AND GROUTING THE NEW PIPE IN PLACE. WATERSTOP GASKETS SHALL BE USED WITH P.V.C. AND A.B.S. COMPOSITE PIPE. THE NEW PIPE SHALL BE GROUTED INTO THE OPENING USING AN APPROVED NONSHRINK GROUT FOR THE FULL MANHOLE WALL THICKNESS. THE EXTERIOR OF THE COMPLETED CONNECTION SHALL BE SEALED WITH AN APPROVED BITUMINOUS COATING SUCH THAT THE CONNECTION WILL BE WATER TIGHT. FLOOR OF MANHOLE SHALL BE MODIFIED TO FORM NEW FLOW CHANNEL FOR THE NEW CONNECTION AS INDICATED BY THE DRAWING. THIS WORK, INCLUDING MODIFICATION OF MANHOLE FLOOR, SHALL BE PAID FOR AT THE UNIT PRICE BID FOR OUTSIDE DROP STACK CONSTRUCTED ON EXISTING MANHOLE.
13. THE FLOORS OF ALL MANHOLES SHALL BE SHAPED WITH FLOW CHANNELS SUCH THAT THE MANHOLES WILL BE SELF CLEANING AND FREE OF AREAS WHERE SOLIDS COULD BE DEPOSITED AS SEWAGE FLOWS THROUGH THE MANHOLE FROM ALL INLET PIPES TO THE OUTLET PIPE. FLOW CHANNELS SHALL BE FORMED TO MATCH THE BOTTOM HALVES OF THE INFLOWING PIPES AND THE OUTFLOWING PIPE AS SHOWN BY THE DRAWINGS EXCEPT FOR INSIDE DROP MANHOLES. FLOW CHANNELS FOR INSIDE DROP MANHOLES SHALL BE CONSTRUCTED AS INDICATED BY THE DRAWING. MANHOLE FLOORS SHALL HAVE SLOPES OF 3 INCHES PER FOOT IN THE AREAS OUTSIDE OF THE FLOW CHANNELS SLOPED TOWARD THE FLOW CHANNELS. PIPES LAID THROUGH MANHOLES SHALL HAVE THE TOP HALF REMOVED TO NEAT LINES FOR THE FULL INSIDE DIAMETER OF THE MANHOLE. MANHOLE FLOORS SHALL THEN BE SHAPED AROUND THE BOTTOM HALF OF THE PIPE WHICH FORMS THE FLOW CHANNEL.
14. PIPES INSTALLED WITHIN THE EXCAVATION MADE FOR THE MANHOLE SHALL BE CRADLED WITH CONCRETE TO THE LIMITS OF THE MANHOLE EXCAVATION. WHEN CLAY PIPE IS USED, THE CRADLE SHALL EXTEND TO THE FIRST JOINT OUTSIDE THE MANHOLE. THE CRADLE SHALL BE TERMINATED AT THE CLAY PIPE JOINT IN A MANNER WHICH WILL MAINTAIN THE FLEXIBILITY OF THE JOINT. COST OF CRADLE WITHIN MANHOLE EXCAVATION OR TO CLAY PIPE JOINTS ADJACENT TO MANHOLE SHALL BE INCLUDED IN THE UNIT PRICE BID FOR THE MANHOLE.
15. MANHOLE COVER CASTINGS AND MANHOLE FRAME CASTINGS SHALL CONFORM TO THE REQUIREMENTS AS INDICATED IN THE STANDARD SPECIFICATIONS AND AS SHOWN IN THE STANDARD DETAIL DRAWING.
16. THE VERTICAL DROP IN INSIDE DROP MANHOLES SHALL NOT EXCEED 2' FOR INFLOWING PIPES SIZED 12" OR SMALLER AND 2' FOR INFLOWING PIPES LARGER THAN 12". THE CROWNS OF INFLOWING PIPES SHALL NEVER BE SET LOWER THAN THE CROWN OF THE OUTFLOWING PIPE.
17. STANDARD MANHOLES AND STANDARD INSIDE DROP MANHOLES SHALL BE BID AS STANDARD MANHOLES FOR THE TYPE AND DIAMETER INDICATED. OUTSIDE DROP MANHOLES SHALL BE BID AS STANDARD OUTSIDE DROP MANHOLES FOR THE TYPE AND DIAMETER INDICATED. ALL MANHOLE DIAMETERS WILL BE 4' UNLESS INDICATED OTHERWISE.
18. A BRICK MASONRY COLLAR SHALL BE INSTALLED BETWEEN THE CAST IRON FRAME AND THE CONCENTRIC CONE. THE COLLAR WILL HAVE 8" WALLS AND A VERTICAL HEIGHT OF 6" MINIMUM AND 18" MAXIMUM. A 1" COAT OF MORTAR WILL BE PLASTERED ON THE OUTSIDE OF THE COLLAR. THE USE OF PRE-CAST CONCRETE SPACERS FOR MANHOLE TOP ADJUSTMENT IS ALSO ALLOWED.

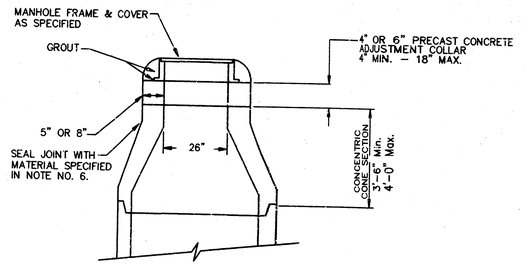

ALTERNATE CONSTRUCTION IN UNPAVED AREAS

CITY OF WICHITA

STD. MANHOLE DETAILS

& SEWER APPURTENANCES DETAILS

BAUGHMAN COMPANY P.A.
ENGINEERING, SURVEYING, & PLANNING
316-262-7271 • 315 ELLIS • WICHITA, KANSAS 67211

PROJECT NUMBER				SHEET
DESIGN	DRAWN NOV.93	APPROVED	DATE	SCALE

4 of 6

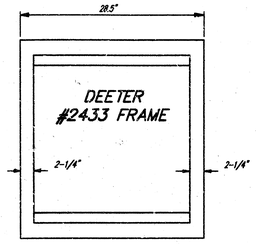

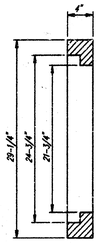

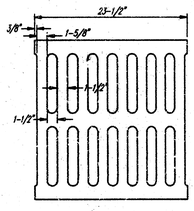

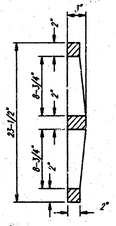

DEETER #2433 GRATE

NOTE: Grates shall be imprinted on the top surface with "CITY OF WICHITA" using letters at least 1" in height. Other marking methods may be approved by the engineer.

24" x 24" Frame and Grate Detail

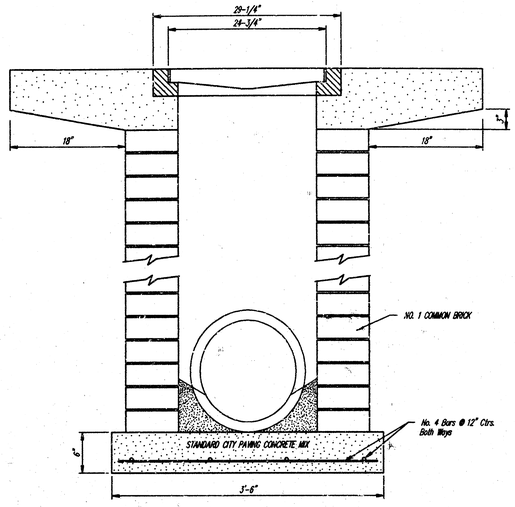

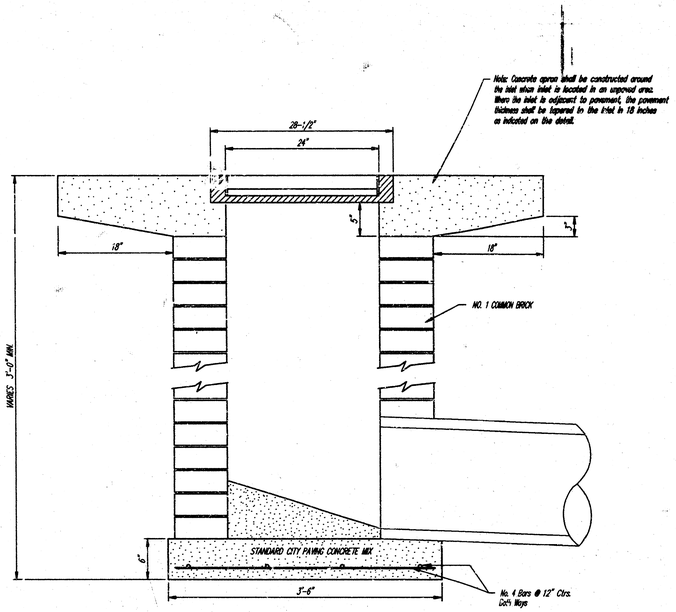

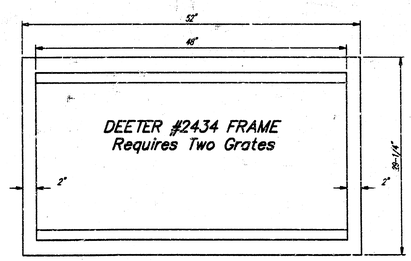

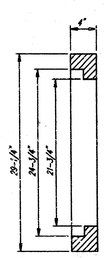

Double 24" x 24" Frame Detail

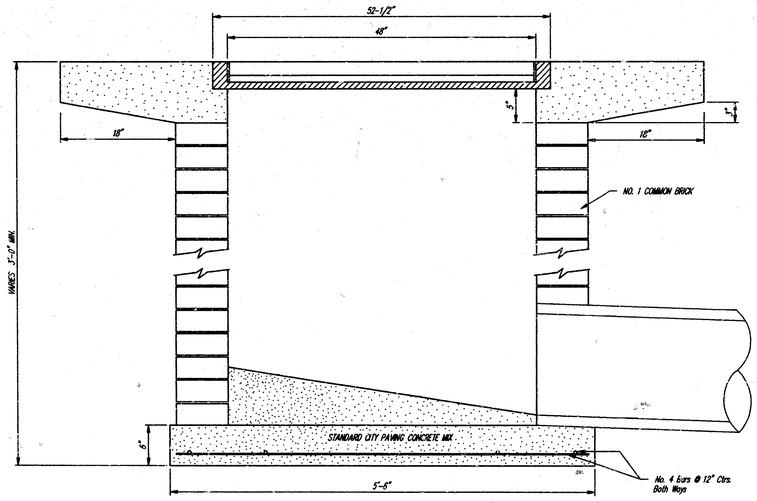

City of Wichita Standard
Drop Inlet

BAUGHMAN COMPANY P. A.
ENGINEERING, SURVEYING, & PLANNING
316-262-7271 • 315 ELLIS • WICHITA, KANSAS 67211

PROJECT NUMBER				SHEET 5 OF 6
DESIGN	DRAWN	APPROVED	DATE	SCALE

DETAILS\DROPINLT

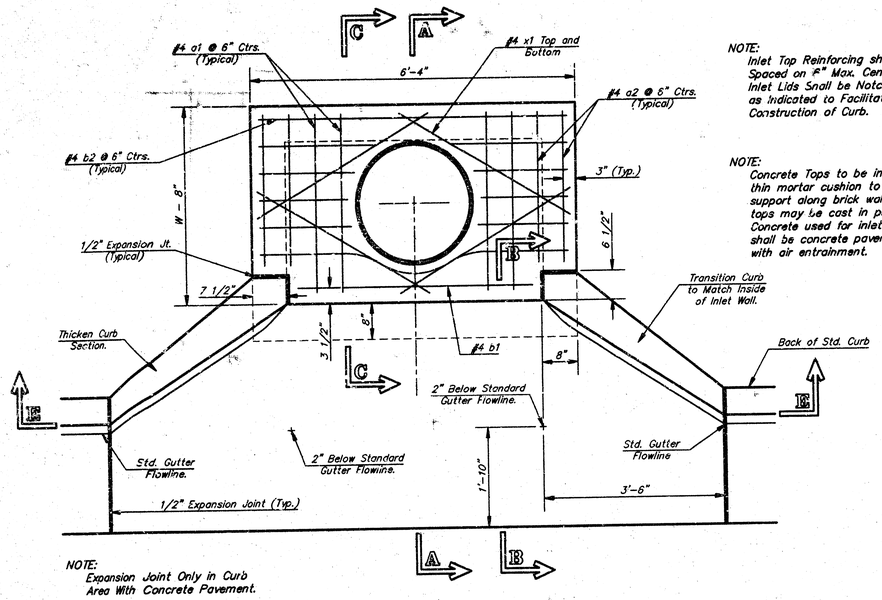

NOTE:
Expansion Joint Only in Curb Area With Concrete Pavement.

PLAN

NOTE:
Inlet Top Reinforcing shall be Spaced on 8" Max. Centers. Inlet Lids Shall be Notched Out as Indicated to Facilitate Construction of Curb.

NOTE:
Concrete Tops to be installed on thin mortar cushion to insure full support along brick walls. Concrete tops may be cast in place or precast. Concrete used for inlet construction shall be concrete pavement mix with air entrainment.

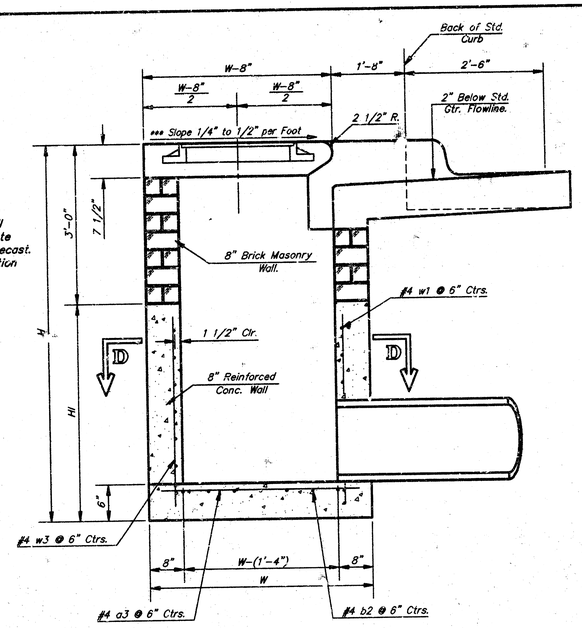

SECTION A-A

***NOTE: Slope of inlet tops to Match Sidewalk or Parking Slopes within Limits Indicated.

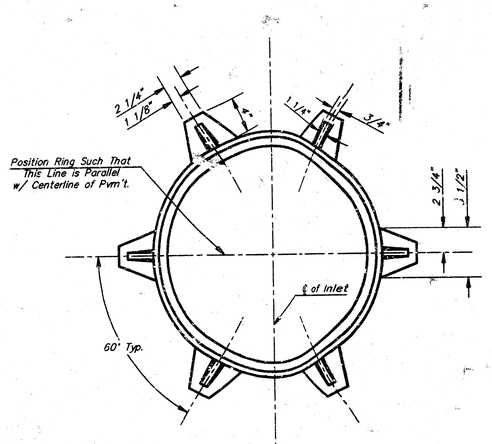

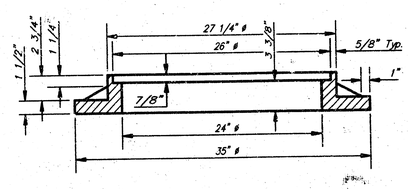

MANHOLE RING AND COVER

Weight = 180 Lbs.

*See City of Wichita Standard Manhole Ring and Cover Detail Sheet for Cover Details to Be Used With Inlet Frame.

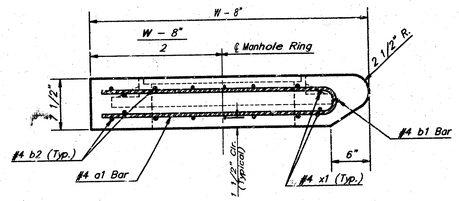

SECTION A-A

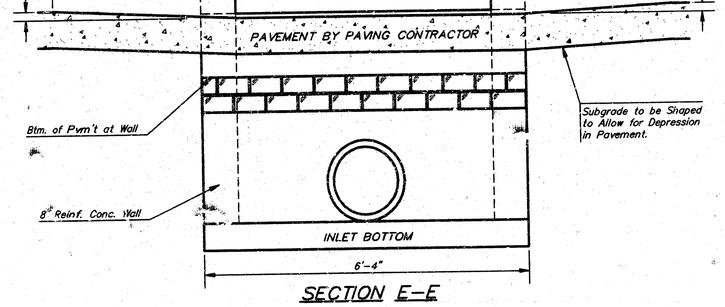

SECTION E-E

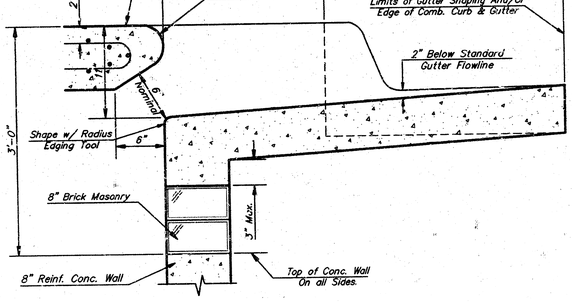

SECTION B-B

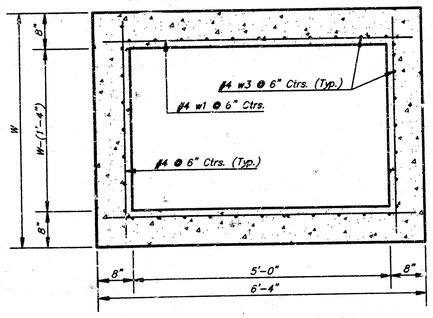

SECTION D-D

NOTE: Contractor shall have the option of constructing 8" brick masonry walls between the concrete inlet base and top on this inlet when W=6'-4" and H=7'-0" or less.

Additional curb and gutter construction necessary to connect set-back inlet to pavement will be paid for at the unit price bid for each inlet hookup.

Inlet invert shall be shaped with 8 sack sand mix concrete to create flow channels and to increase hydraulic efficiency such that the inlet will be self-cleaning between all inlet and/or outlet pipes.

The ends of all pipes installed in inlets shall be cut off flush with the inside face of the inlet wall

PRECAST SLAB AND FLOOR REINFORCING

		W = 4'-4"		W = 5'-4"		W = 6'-4"		W = 7'-4"		W = 8'-4"	
MARK	SIZE	NO.	LENGTH	NO.	LENGTH	NO.	LENGTH	NO.	LENGTH	NO.	LENGTH
* a1	#4	6	6'-7"	6	8'-7"	6	10'-7"	6	12'-7"	6	14'-7"
a2	#4	4	6'-0"	4	8'-0"	4	10'-0"	4	12'-0"	4	14'-0"
a3	#4	13	4'-1"	13	5'-1"	13	6'-1"	13	7'-1	13	5'-1"
b1	#4	1	4'-9"	1	4'-9"	1	4'-9"	1	4'-9"	1	4'-9"
* b2	#4	23	6'-1"	29	6'-1"	35	6'-1"	41	6'-1"	47	6'-1"
x1	#4	8	3'-10"	8	4'-2"	8	4'-6"	8	4'-10"	8	5'-2"

WALL REINFORCING

		W = 4'-4"		W = 5'-4"		W = 6'-4"		W = 7'-4"		W = 8'-4"	
MARK	SIZE	NO.	LENGTH	NO.	LENGTH	NO.	LENGTH	NO.	LENGTH	NO.	LENGTH
w1	#4	①	6'-1"	①	6'-1"	①	6'-1"	①	6'-1"	①	6'-1"
w2	#4	①	4'-1"	①	5'-1"	①	6'-1"	①	7'-1"	①	8'-1"
w3	#4	32	②	36	②	40	②	44	②	48	②

* Field Bend or Cut Reinforcing as Required for Clearance.

① 4 (HI - 12") (HI - 21") Rounded down to nearest 0.5'

② HI - 3"

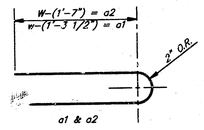

BENDING DIAGRAM

STANDARD CURB INLET PRECAST TOPS

W	PRE-CAST TOP SIZE	PIPE SIZE	CU. YD. CONC.
4'-4"	3'-8" x 6'-4" x 7 1/2"	21" & SMALLER	0.38±
5'-4"	4'-8" x 6'-4" x 7 1/2"	24" & 30"	0.51±
6'-4"	5'-8" x 6'-4" x 7 1/2"	36" & 42"	0.64±
7'-4"	6'-8" x 6'-4" x 7 1/2"	48" & 54"	0.77±
8'-4"	7'-8" x 6'-4" x 7 1/2"	60" & 66"	0.90±

Revised - Feb. 16, 1989

CITY OF WICHITA STANDARD TYPE 1A

Curb Inlet Details

INLET OPENING = 6' x 5'-0"

BAUGHMAN COMPANY P.A.
ENGINEERING, SURVEYING, & PLANNING
316-262-7271 • 315 ELLIS • WICHITA, KANSAS 67211

PROJECT NUMBER

SHEET 6 OF 6

DESIGN	DRAWN	APPROVED	DATE	SCALE
C.O.W.	Staff			None

Typ 14-S

S-A-T-AT

29 RS