BOEING COMMERCIAL AIRPLANE GROUP

WICHITA DIVISION

EROSION REPAIR S.E. CORNER OF MASTER MODEL BUILDING

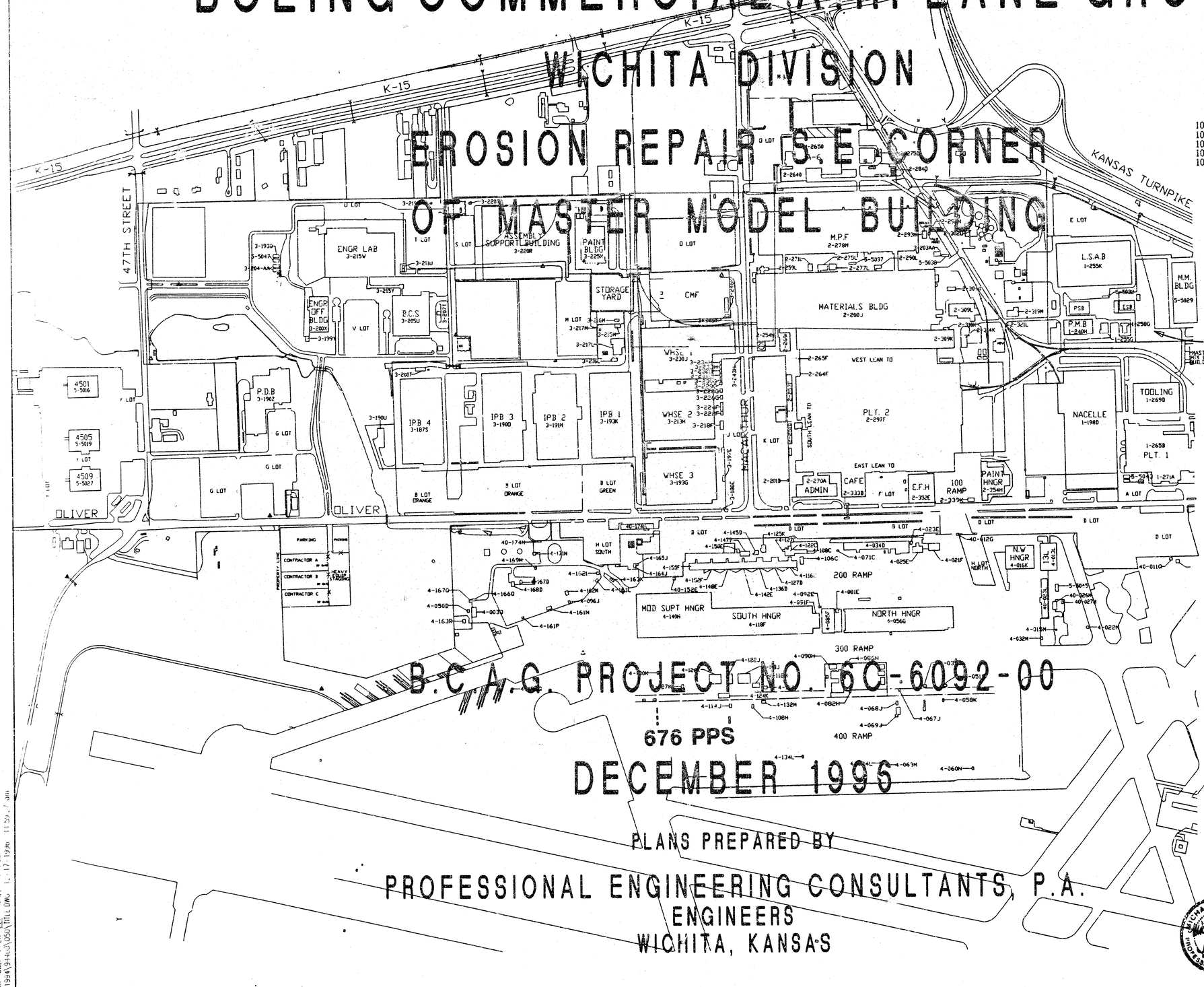

PROJECT AREA

INDEX OF SHEETS

105K-101-5 (C1)	TITLE SHEET
105K-102-5 (C2)	MISCELLANEOUS DETAILS
105K-103-5 (C3	PLAN
105K-104-5 (C4)	AREA INLET DETAILS
105K-105-5 (C5)	STORMWATER SKIMMER/TRAP

LEGEND

▲ PERMANENT CONTROL MONUMENT

△ SEMI-PERMANENT CONTROL MONUMENT

N

NO SCALE

APPROVED AS NOTED
BY CITY ENGINEER OF WICHITA

SANITARY SEWERS _____

STORM SEWERS VRH 12/19/96

DRIVEWAY APPROACHES _____

WATER MAINS _____

PAVING _____

CITY OF WICHITA PRIVATE PROJECT
NO. 676PPS (607861)

B.C.A.G. PROJECT NO. 6C-6092-00

676 PPS

DECEMBER 1996

PLANS PREPARED BY

PROFESSIONAL ENGINEERING CONSULTANTS, P.A.
ENGINEERS
WICHITA, KANSAS

MICHAEL W. BERRY 9969 KANSAS PROFESSIONAL ENGINEER

DWG. NO. 105K-101-5

DGN: Mkt_civil_US_Ft.dgn
Q:\1994\9440\050\Title DWG 12-17-1996 11:39:7 am

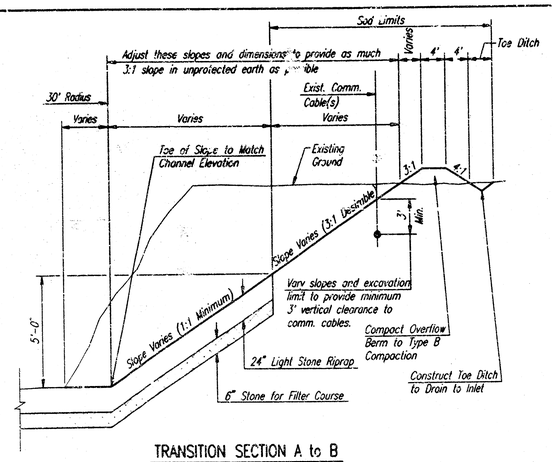

TRANSITION SECTION A to B

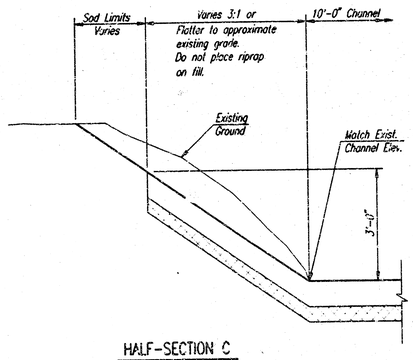

HALF-SECTION C

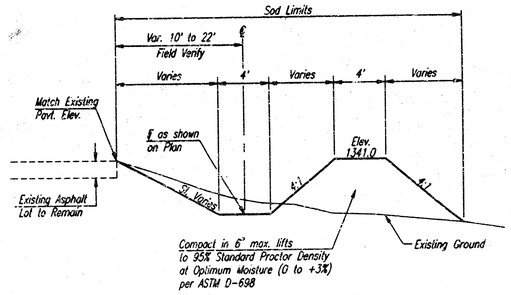

DITCH / BERM

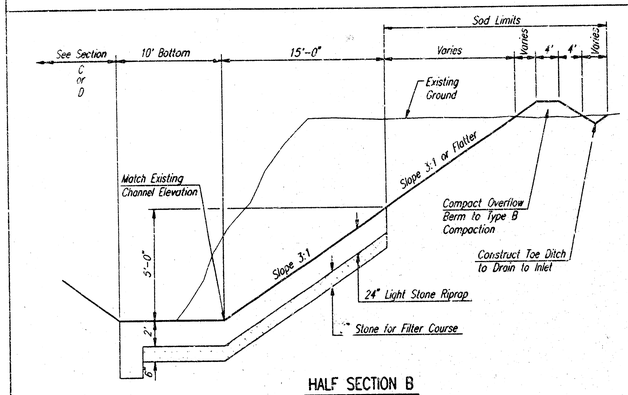

HALF SECTION B

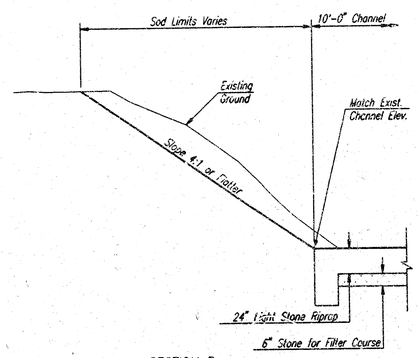

SECTION D

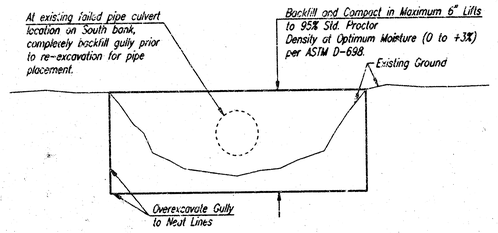

GULLY REPAIR

OUTSIDE CHANNEL CONSTRUCTION LIMITS

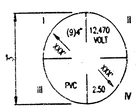

PLAN

UNDERGROUND UTILITY MARKERS

DESCRIPTIONS:

LEGEND/QUADRANT	CODE	MECHANICAL	ELECTRICAL
I	SIZE	SIZE	QUANTITY AND SIZE
II	UTILITY	WATER, GAS, ETC.	VOLTAGE OR COMM.
III	MATERIAL	IRON, PVC, ETC.	RGS OR PVC
IV	DEPTH	DISTANCE, IN FEET, FROM TOP OF MARKER TO TOP OF UTILITY	

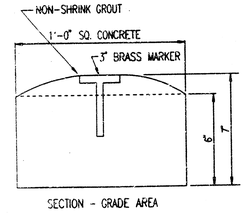

SECTION - GRADE AREA

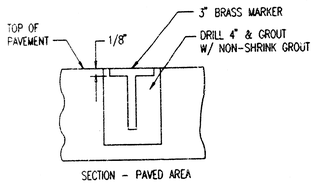

SECTION - PAVED AREA

UTILITY MARKER DETAIL

NO SCALE

DESCRIPTION	ABBREVIATION
AIR	AIR
CHILLED WATER SUPPLY	CHWS
CHILLED WATER RETURN	CHWR
CONDENSATE	CNDST
COMMUNICATION	COMM
CONDENSER WATER SUPPLY	CWS
CONDENSER WATER RETURN	CWR
DEIONIZED WATER	DI
GAS	GAS
HOT WATER SUPPLY	HWS
HOT WATER RETURN	HWR
IRRIGATION	IRRG
INDUSTRIAL WASTE	IW
SANITARY SEWER	SAN SWR
STEAM	STEAM
STORM WATER SEWER	STORM
TRANSITE	XITE
VOLTAGE	VOLT
DOMESTIC WATER	WTR
WATER RECOVERY	WTR REC
MATERIALS:	MATERIALS:
CAST IRON PIPE	CIP
CORRUGATED METAL PIPE	CMP
COMPOSITE PIPE	CP
POLYVINYL CHLORIDE	PVC
REINFORCED CONCRETE PIPE	RCP
RIGID GALVANIZED STEEL	RGS
STEEL PIPE	STEEL PIPE
VITRIFIED CLAY PIPE	VCP
ALUMINUM	AL
CONDUIT	C
APPLY THE FOLLOWING IN THE APPROPRIATE CASES:	
CONCRETE ENCASED	CONC
DIRECT BURIAL	DB
DOUBLE CONTAINED PIPE	DCP
FIRE PROTECTION	FP
UTILITY TRENCH	UT

UNDERGROUND UTILITY MARKERS

ARROW — DIRECTION(S) OF UTILITY WITH DISTANCES, XXX IN FEET, TO AND FROM ADJACENT MARKER(S) OR UTILITY STUB-UP(S).

MARKERS — SHALL BE LOCATED ON THE DRAWINGS, FURNISHED, AND INSTALLED PER THE FOLLOWING REQUIREMENTS:

LOCATION — EXTERIOR:
CHANGE OF DIRECTION
WITHIN 5'-0" OF WALL
MINIMUM ONE PER REQUIRED UTILITY
CROSSING OF SIDEWALKS, ROADS, ETC.
MAXIMUM 150' APART, WITH LINE OF SIGHT
ACCESS CONTROL POINTS, MANHOLES, VALVES, ETC.

INTERIOR:
CHANGE OF DIRECTION
WITHIN 5'-0" OF WALL
MINIMUM ONE PER REQUIRED UTILITY
MAXIMUM 50' APART, WITH LINE OF SIGHT
ACCESS CONTROL POINTS, MANHOLES, VALVES, ETC.

MARKERS REQUIRED: SHALL BE INSTALLED FOR THE FOLLOWING UTILITIES:

EXTERIOR:
ALL EXTERIOR PIPES OR CONDUITS EXCEPT IRRIGATION (SPRINKLER SYSTEMS) DISTRIBUTION PIPE

INTERIOR:
600 VOLT AND ABOVE
SUBSTATION FEEDERS
ENVIRONMENTAL UTILITIES
GAS AND/OR PROPANE LINE(S)
CRITICAL SERVICE - EMERGENCY, BREATHING AIR, ETC.
ALL PIPE AND/OR CONDUIT OF 1 1/4" AND LARGER DIAMETER

NOTES:
LETTERING SHALL BE STAMPED 1/4" BLOCK STYLE LETTERS.
ALL NEW AND EXISTING (UNCOVERED AT POINT OF EXCAVATION) UNDERGROUND UTILITIES SHALL BE MARKED PER THE ABOVE REQUIREMENTS.
ANY DISTURBED MARKERS SHALL BE REPLACED.
MARKERS SHALL BE A 3" FLAT BRASS SURVEY MARKER, LIETZ #8434-08 OR BOEING PLANT ENGINEERING APPROVED EQUAL. SERVICE CONTRACTORS MAY OBTAIN AND STAMP MARKERS AT THE UTILITY MAPPING CENTER (BLDG. 2-260G). ACCESS CONTROL POINTS, MANHOLES, VALVES, ETC. COVERS SHALL REFLECT CORRECT UTILITY.

SODDING

ALL DISTURBED AND EXCAVATED AREAS SHALL BE SODDED WITH K-31 FESCUE SOD AS SHOWN ON THE DETAILS. THE SOD PLANTING SEASON SHALL BE MARCH 1, TO APRIL 15 OR SEPTEMBER 1 TO NOVEMBER 15.

AREAS TO BE SODDED SHALL BE PREPARED BY THOROUGH CULTIVATION, SMOOTHING, REMOVAL OF CLODS AND STONES GREATER THAN ONE INCH IN SIZE, REMOVAL OF WEEDS, AND THOROUGHLY WATERING THE AREA.

SOD SHALL BE STAKED WITH TWO TO FOUR WOOD LATH STAKES OR ELEVEN GAUGE UNGALVANIZED WIRE STAPLES PER SQUARE YARD. SOD SHALL BE FIRMED AFTER PLACEMENT WITH A ROLLER OR TAMPER. ALL AIR POCKETS SHALL BE REMOVED, AND THE SOD ROOTS SHALL BE PACKED FIRMLY INTO THE PREPARED SOIL.

THE CONTRACTOR SHALL WATER ALL SOD IMMEDIATELY AFTER PLACEMENT. ALL SODDED AREAS SHALL BE KEPT THOROUGHLY WATERED BY THE CONTRACTOR FOR THIRTY DAYS AFTER PLACEMENT.

LIGHT STONE RIPRAP

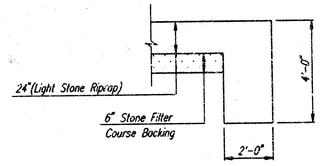

TYPICAL SECTION THRU TOEWALL

NO SCALE

NOTES

1. ALL RIPRAP FOR THIS PROJECT SHALL BE NATURAL STONE. NEITHER BROKEN CONCRETE, FABRIC ENVELOPE, NOR PREMIXED DRY PACKAGED CONCRETE BAG ALTERNATES WILL BE ALLOWED.
2. TOEWALLS SHALL BE INSTALLED ALONG EDGES OF STONE RIPRAP AS SHOWN IN SECTIONS.
3. STONE FOR RIPRAP AND STONE FOR FILTER COURSE SHALL CONFORM TO THE REQUIREMENTS OF SUBSECTION 1116 OF "STANDARD SPECIFICATIONS FOR STATE ROAD AND BRIDGE CONSTRUCTION", KANSAS DEPARTMENT OF TRANSPORTATION, EDITION 1990. GRADATION OF RIPRAP SHALL BE LIGHT SERIES, 24" AS STATED IN TABLE II. STONE FOR FILTER COURSE SHALL BE TYPE III. CONTRACTOR SHALL SUPPLY MANUFACTURER'S MATERIAL CERTIFICATION FOR THESE MATERIALS.

C.O.W. PROJ. NO. PPS (607861)

MICRO FILM ☐ YES ☐ NO

PLANT ENGINEERING CONTACT: JERRY PUCKETT 526-1894

BY	APPROVED

STM	DATE	REVISION

ENGINEER
BY _____ FOR _____
☐ APPROVED
☐ NOT REVIEWED
☐ NOT REQUIRED
DATE _____

ACCEPTABILITY OF WORK
SPECIFICATIONS APPROVED
APPROVED BY | DEPT | DATE

EROSION REPAIR S.E. CORNER OF MASTER MODEL BUILDING
MISCELLANEOUS DETAILS
BOEING COMMERCIAL AIRPLANE GROUP
WICHITA KANSAS

PROFESSIONAL ENGINEERING CONSULTANTS
professional association
303 South Topeka / (316) 262-2691
Wichita, Kansas 67202

Job No. 36-94400-50-196
Sheet C2 of 5

Designed by MWB
Drawn by DEP

Sym 0 | Date Dec. 96
Project No. 6C-5092-00
Sheet C2
Drawing No. 105K-102-5

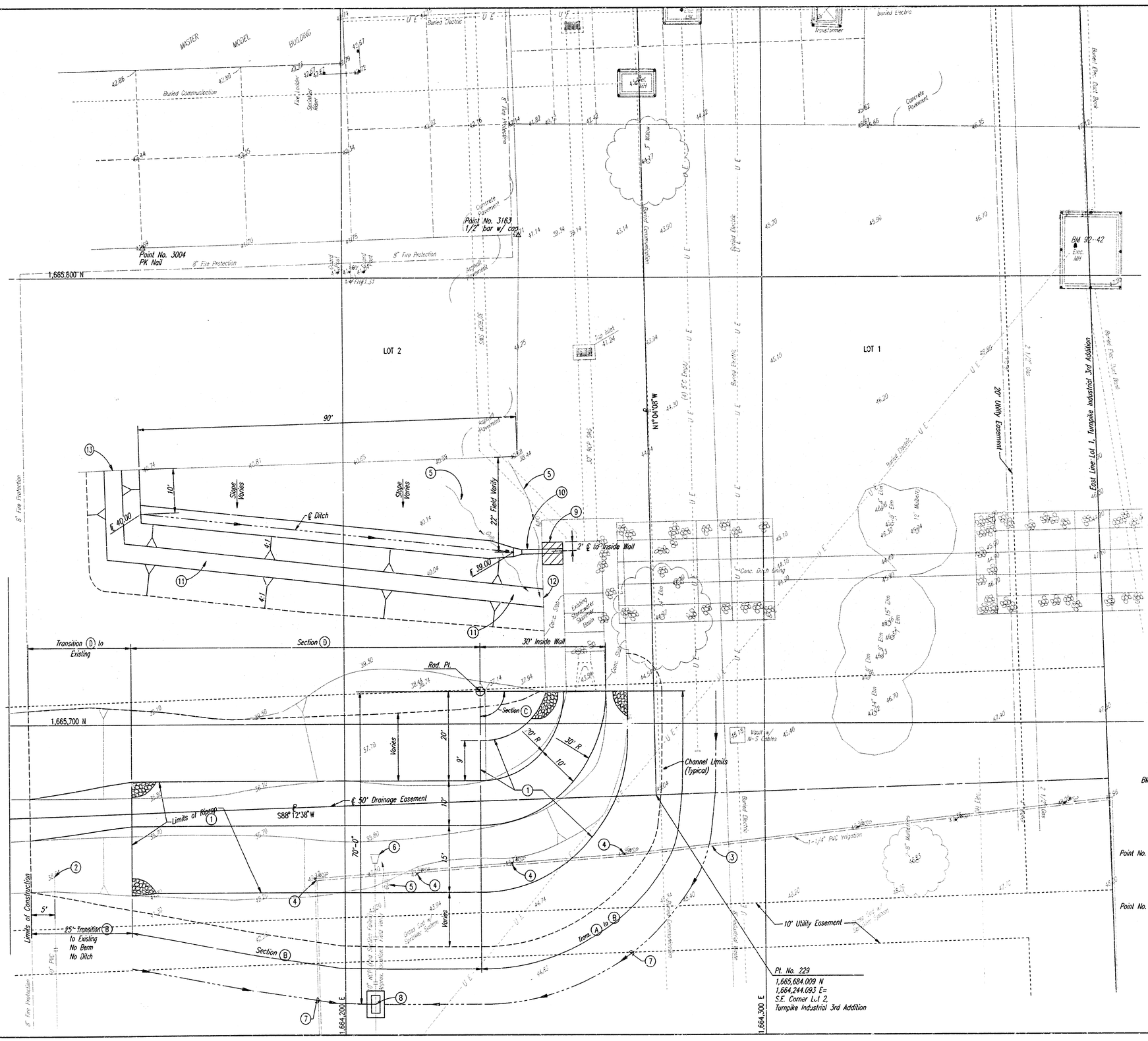

1. INSTALL 24" LIGHT STONE RIPRAP ON 6" STONE FILTER COURSE.
2. ABANDON IN PLACE
3. CAP AND ABANDON IRRIGATION MAIN. REPAIR AFTER PROJECT CONSTRUCTION BY BOEING PERSONNEL.
4. SALVAGE MATERIALS FROM ABANDONED SPRINKLER LINE AND DELIVER TO BOEING AS DIRECTED.
5. OVEREXCAVATE, BACKFILL AND COMPACT GULLY AREA. SEE DETAIL.
6. SALVAGE FAILED PIPE AN/OR END SECTION. RESET TO GRADE AFTER GULLY BACKFILL IS COMPLETE.
7. TOE DITCH AND OVERFLOW BERM. SEE TYPICAL SECTIONS.
8. CONSTRUCT 4'X2' AREA INLET. TOP ELEVATION = 1342.0. CONNECT TO EXISTING RCP. FIELD VERIFY ALL DIMENSIONS AND ELEVATIONS.
9. REMOVE AND REPLACE 5'X5' CONCRETE SLAB IN KIND.
10. INSTALL 12"X10' RCP WITH END SECTION UPSTREAM FLOWLINE = 1339.0, DOWNSTREAM FLOWLINE = 1338.9. SAW CUT NEAT LINES IN BASIN WALL. GROUT IN WITHIN NON-SHRINK GROUT.
11. DITCH AND BERM. SEE DETAILS.
12. BLEND BERM INTO BASIN WALL.
13. BLEND BERM INTO PAVEMENT.

Bench Mark List

BM 92-42 Chiseled "+" North Rim MH of Concrete Electric Vault, 47' South & 172' East of SE corner Master Model Bldg. El. 1347.31

Reference Ties

Point No. 3004 - PK Nail at South edge conc. drive
Chis. "+" at SE Cor. Tool Fab Bldg. 63.63' NE
SE bolt on Guard Post base 46.01' NW
PK Nail & Shiner near Post Ind. Valve 29.40' SW
At North edge Asphalt parking area

Point No. 3163 - 1/2" Rebar w/ PEC ID Cap
At SE Cor. Conc. Porking
At NE Cor. Asphalt Parking
PK Nail & Shiner 25.00' S
Chis. "+" at SE Cor. Master Model Bldg. 56.31' NW
PK Nail 89.59' W

C.O.W. PROJ. NO. 676PPS (607861)

MICRO FILM ☐ YES ☐ NO

PLANT ENGINEERING CONTACT:
JERRY PUCKETT 526-1894

BY	APPROVED	REVISION	BY	APPROVED

STM DATE

ENGINEER
BY _____ FOR _____
☐ APPROVED ☐ NOT REVIEWED
☐ NOT REQUIRED DATE _____

ACCEPTABILITY
THIS DESIGN AND/OR SPECIFICATION IS APPROVED
APPROVED BY DEPT. DATE

EROSION REPAIR S.E. CORNER OF MASTER MODEL BUILDING
PLAN
BOEING COMMERCIAL AIRPLANE GROUP
WICHITA KANSAS

PROFESSIONAL ENGINEERING CONSULTANTS
professional association
301 South Topeka / (316) 262-2691
Wichita, Kansas 67202

MWB Designed by
DEP Drawn by

Job No. 36-94400-50-196
Sheet _ of

Sym 0 Date Dec. 96
Project No. 60-6092-00
Sheet C3
Drawing No. 105K-103-5

DSNR: MWB OPER: DEP SCALE: 1=10.00
Q:\1994\94400\050\SITEPLAN.DWG 12-20-1996 3:29:33 pm

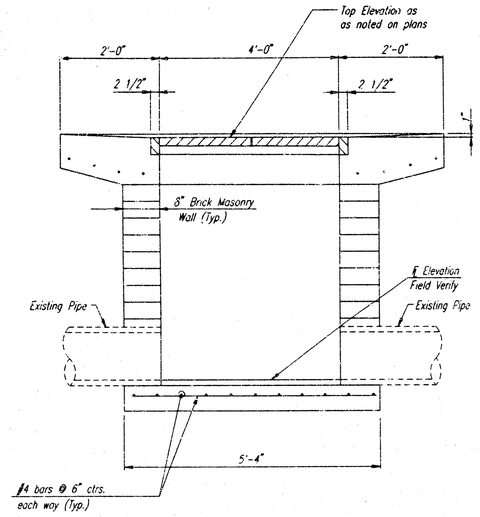

SECTION A-A

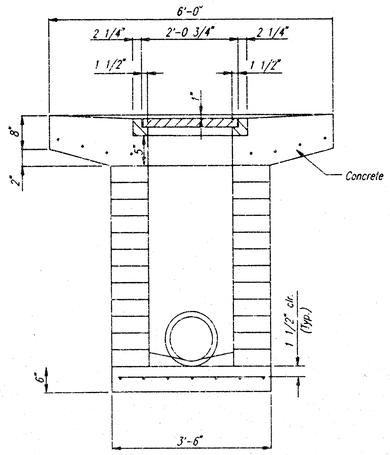

SECTION B-B

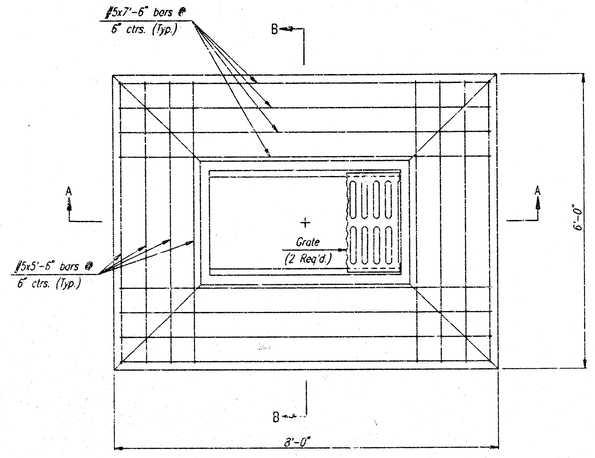

PLAN

STANDARD AREA INLET

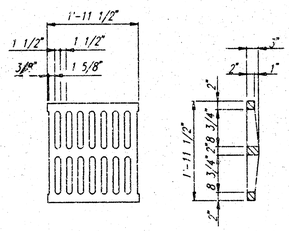

GRATE DETAIL
(Wt.=180 lbs.)
(2 Required)

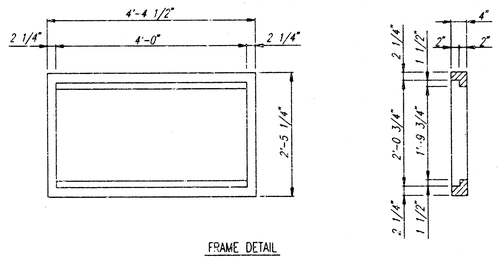

FRAME DETAIL
(Wt.=460 lbs.)

GENERAL NOTES

CONCRETE SHALL BE 3000 PSI 28-DAY STRENGTH. ALL EXPOSED EDGES SHALL BE FINISHED WITH AN APPROVED EDGING TOOL.

REINFORCING STEEL SHALL BE A MINIMUM GRADE 40, A.S.T.M. A615. ALL DIMENSIONS RELATIVE TO PLACEMENT OF REINFORCING ARE TO THE CENTERLINE OF BARS UNLESS OTHERWISE NOTED.

INLET CASTINGS SHALL BE MANUFACTURED USING GOOD QUALITY GRAY IRON CONFORMING TO CLASS 30 OF A.S.T.M. DESIGNATION A-48. DIMENSIONS AND WEIGHTS SHOWN ON THE DETAILED DRAWINGS SHALL BE CONSIDERED AS MINIMUM REQUIREMENTS AND ANY DEVIATIONS FROM THE DIMENSIONS SHOWN MUST BE SPECIFICALLY APPROVED. THE FINISHED CASTINGS SHALL BE OF UNIFORM QUALITY, FREE FROM BLOWHOLES, POROSITY, HARD SPOTS, SHRINKAGE DISTORTIONS OR OTHER EFFECTS.

MASONRY WALLS SHALL BE CONSTRUCTED IN A WORKMANLIKE MANNER. ONLY SEWER BRICK MAY BE USED.

INLET FLOOR SHALL BE SHAPED WITH UNREINFORCED CONCRETE (8 SACK SAND MIX) TO CREATE FLOW CHANNELS AND TO INCREASE HYDRAULIC EFFICIENCY SUCH THAT THE INLET WILL BE SELF CLEANING BETWEEN ALL INLET AND/OR OUTLET PIPES.

EXISTING PIPES ENTERING STRUCTURE SHALL BE CENTERED ON INSIDE FACE OF WALL, AND SHALL BE CUT FLUSH WITH THE INSIDE FACE WALL.

PRECAST CONCRETE INLET MAY BE USED IN LIEU OF MASONRY, AS SHOWN, SUBJECT TO APPROVAL OF SHOP DRAWINGS BY THE ENGINEER.

BY	APPROVED

SYM	DATE	REVISION

ENGINEER
By _____ FOR _____
☐ APPROVED
☐ NOT REVIEWED
☐ NOT REQUIRED
DATE _____

ACCEPTABILITY
THIS DESIGN AND/OR SPECIFICATION IS APPROVED
APPROVED BY: DEPT: D.E.

EROSION REPAIR S.E. CORNER OF MASTER MODEL BUILDING
AREA INLET DETAILS
BOEING COMMERCIAL AIRPLANE GROUP
WICHITA KANSAS

PROFESSIONAL ENGINEERING CONSULTANTS
professional association
9 S.W. Jackson, Suite 1000 / Topeka, Kansas 66612-1354 / (913) 357-6500
151 N. Volutsia / Wichita, Kansas 67214-4731 / (316) 262-2691

Designed by: MMH6
Drawn by: DEP
Job No. 36-94400-50-196
Sheet — of —

Sym 0 | Date Dec. 96
Project No 6C-6092-00
Sheet C4
Drawing No. 105K-104-5

C.O.W. PROJ. NO. PPS (607861)
MICRO FILM ☐ YES ☐ NO
PLANT ENGINEERING CONTACT: JERRY PUCKETT 526-1894

USRN MMH6 USER SCALE 1-1.00
O:\1994\94400\DSA\INLET.DWG 12-17-1996 12:34:00 pm

ZONE LI OCCUP. U2 CONST. TYPE —
APPROVED
CITY OF WICHITA
OFFICE OF CENTRAL INSPECTION
Date 7/24/95 By

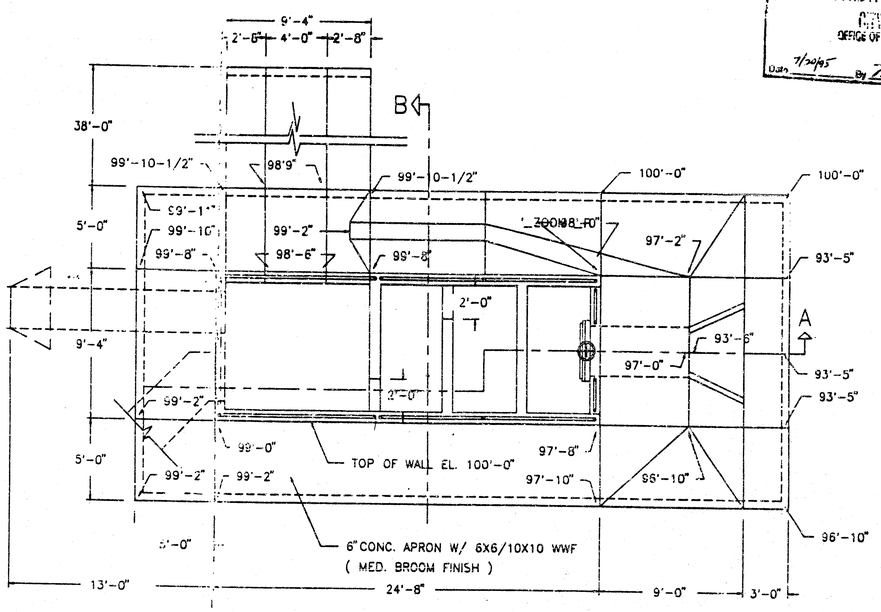

PLAN

1/4" = 1'-0"

NOTES:
CONCRETE: 4000 PSI, 3/4" ROCK, 5% AIR, 4" MAX. SLUMP.
REBAR: ASTM – A615 GRADE 60.
CUT DITCH ON EAST SIDE TO MATCH FLUME PROFILE, FILL AND BACKFILL AS REQUIRED TO SEED GRASS.
STEEL PIPE GUARDRAIL TO BE PAINTED.
SLUICE GATE TO BE FRESNO 20–10C, 36"DIA., CAST IRON
PROVIDE SKIMMER AND DRAW DOWN PIPING TO REMOTE COUPLING AT ADJACENT CONCRETE SLAB TO THE NORTH.
REMOVE RCP PIPE AS REQUIRED ON NORTH INCOMMING 36" LINE TO PRIVIDE 45 DEGREE TRANSITION TO AND AT NEW BAFFLE STRUCTURE.

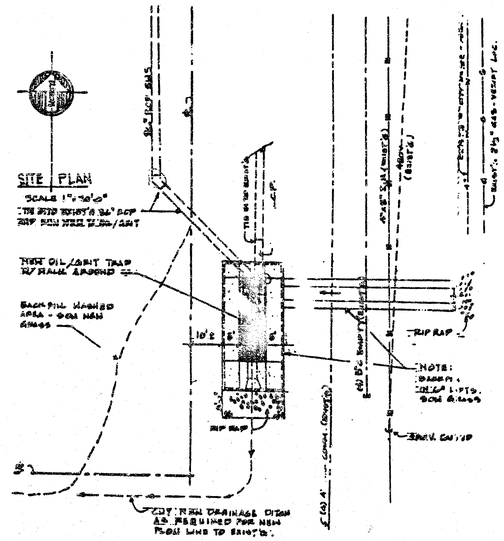

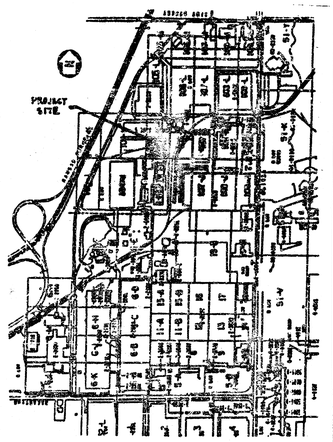

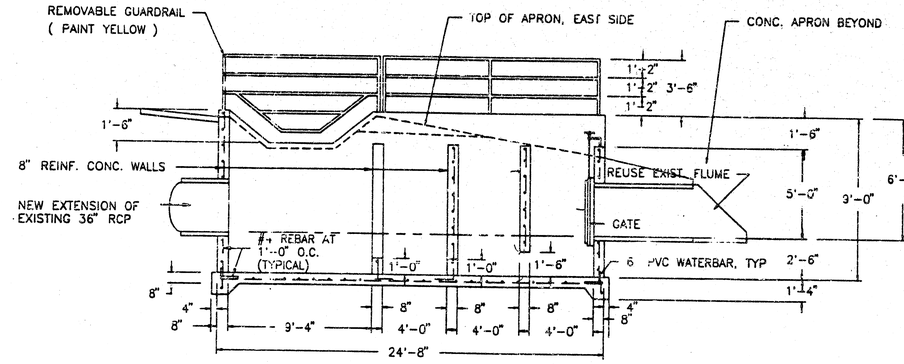

SECTION A

1/4" = 1'-0"

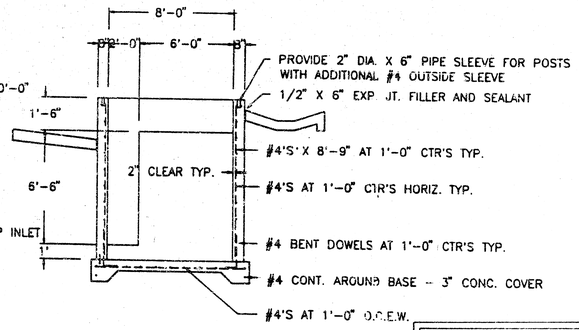

SECTION B

1/4" = 1'-0"

FOR INFORMATION ONLY

THIS SHEET PROVIDED AS BEST AVAILABLE RECORD OF STRUCTURE IN PLACE. CONTRACTOR SHALL VERIFY CONDITIONS IN FIELD.

BOEING STORMWATER SKIMMER / TRAP

SNODGRASS CONSTRUCTION CO.

7/17/95

REVISIONS:

RAY E. LOWEN, ARCHITECT
1255 S. SAGEBRUSH CT.
WICHITA, KANSAS 67230

FOR CONSTRUCTION

BOEING COMPANY
3801 S. OLIVER,
WICHITA, KANSAS 67210

STORMWATER SKIMMER / TRAP

1

BCAG PROJ NO. 6C-6092-00 SHEET C5
DWG NO 105K-105-5

3-1-4-4T