APPROVED AS NOTED
BY CITY ENGINEER OF WICHITA

Storm Sewers VRH 1/2/97

NOTE TO CONTRACTORS

Inspection and testing for this project is to be provided by a Licensed Consulting Engineering Firm under contract with the Owner/Developer. Said inspection to be in accordance with the City of Wichita standard construction engineering practices and certified by a Licensed Professional Engineer. No work shall be performed in dedicated easements or public right-of-way by the Contractor without such inspection nor shall any work be commenced without written authorization by the City Engineer. All Construction and Materials shall comply with the City of Wichita Specifications and Standards (on file and available in the City Engineer's Office).

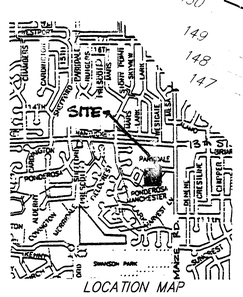

Site Benchmark:

City of Wichita Benchmark. NW Corner intersection of Maize Road and 13th Street North, 109.5' north and 71' west of Centerline of Both.
Elevation = 160.02 City Datum

Booked 5'-12 Mag D-390

Vertical Scale: 1" = 5'
Horizontal Scale: 1" = 20'

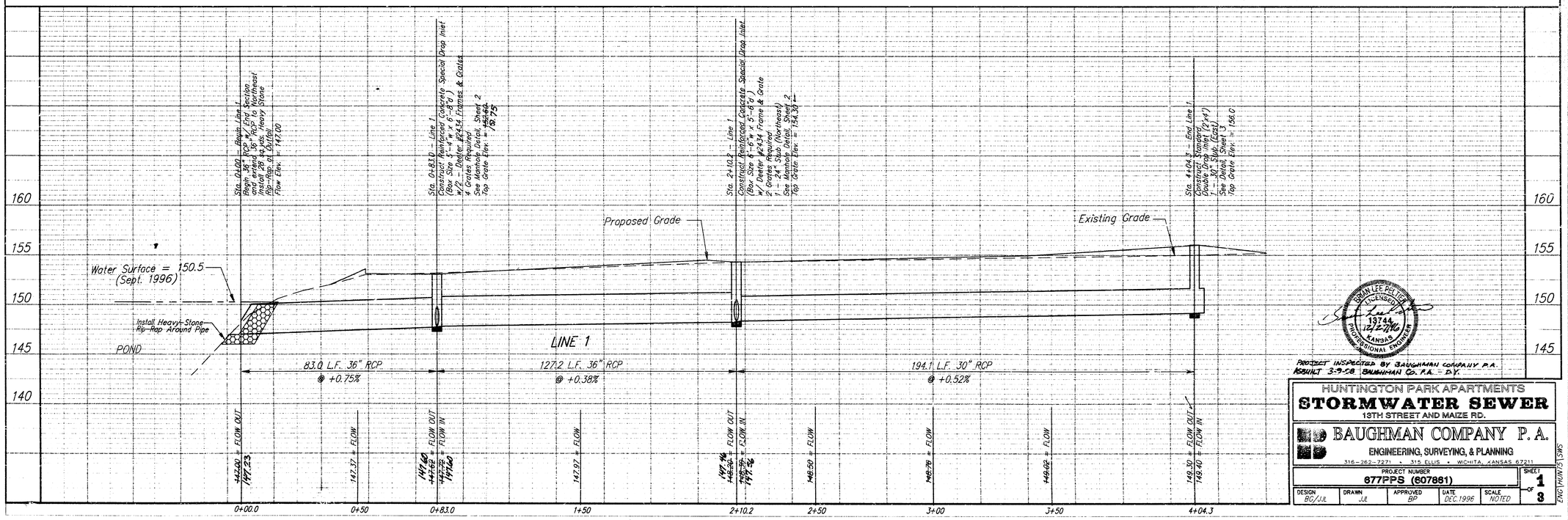

PROJECT INSPECTED BY BAUGHMAN COMPANY P.A.
ASBUILT 3-9-98 BAUGHMAN CO. P.A. - D.Y.

HUNTINGTON PARK APARTMENTS
STORMWATER SEWER
13TH STREET AND MAIZE RD.

BAUGHMAN COMPANY P. A.
ENGINEERING, SURVEYING, & PLANNING
316-262-7271 • 315 ELLIS • WICHITA, KANSAS 67211

PROJECT NUMBER				SHEET
677PPS (607861)				1 OF 3
DESIGN	DRAWN	APPROVED	DATE	SCALE
BC/JJL	JJL	BP	DEC 1996	NOTED

ENG\HUNTS\SWS

NOTE:
Bend Bars Not More Than 8" to Clear Pipes, or Cut Bars 2" Clear of Pipe, as Necessary.

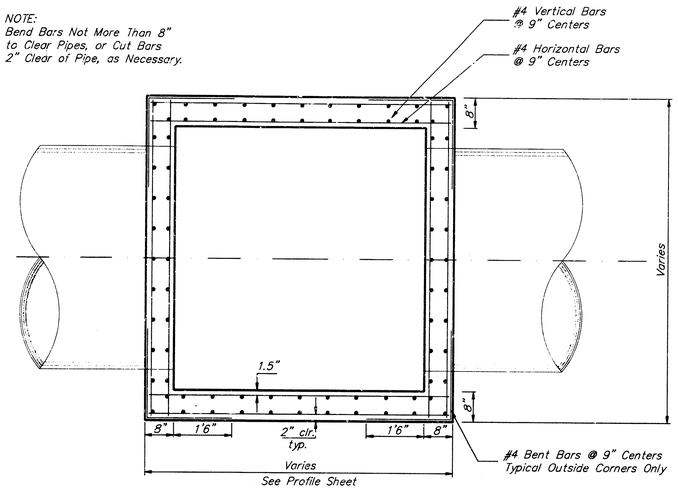

BOX SECTION B-B

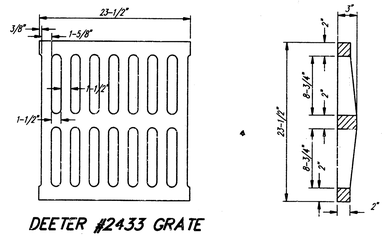

PLAN - 24" X 24" GRATE DETAIL

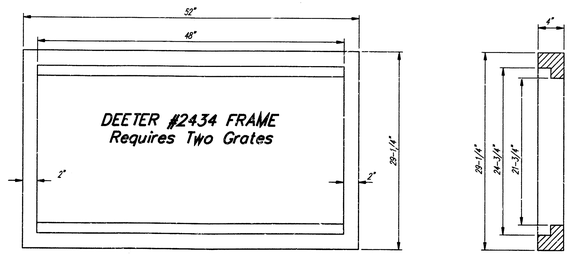

PLAN - DOUBLE 24" X 24" FRAME DETAIL

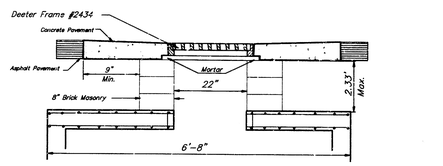

INLET BRICK STACK LESS THAN 2.33'
SECTION A-A
STATION 0+83.0

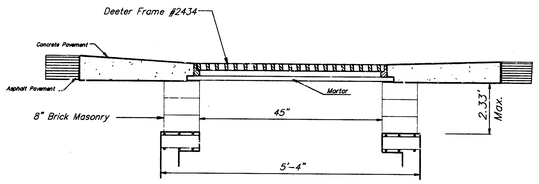

INLET BRICK STACK LESS THAN 2.33'
SECTION B-B
STATION 0+83.0

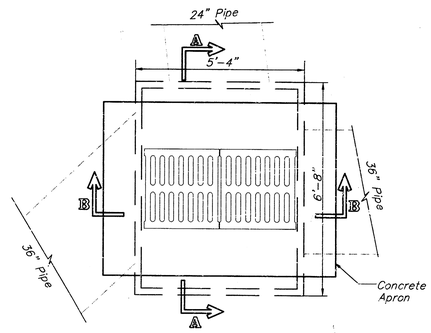

PLAN VIEW DROP INLET
STATION 0+83.0

GENERAL NOTES:

1. MORTAR USED IN MASONRY CONSTRUCTION SHALL CONTAIN 8 SACKS OF CEMENT PER CUBIC YARD. CONCRETE USED IN MANHOLE WALLS AND BASES SHALL CONFORM TO THE REQUIREMENTS FOR CONCRETE PAVEMENT CONSTRUCTION AS SPECIFIED IN THE CITY STANDARD PAVING SPECIFICATIONS, USING CITY CONCRETE PAVEMENT MIX WITHOUT AIR ENTRAINING ADMIXTURE. MORTAR SHALL BE PLACED AROUND THE MANHOLE RING AS SHOWN ON THE DRAWINGS WHEN MANHOLES ARE CONSTRUCTED IN UNPAVED AREAS. COMPLETED MANHOLE SHALL BE WITHOUT LEAKS AND WATER TIGHT.

2. THE FLOORS OF ALL MANHOLES SHALL BE SHAPED WITH FLOW CHANNELS SUCH THAT THE MANHOLES WILL BE SELF CLEANING. USING 8-SACK SAND MIX CONCRETE. FLOW CHANNELS SHALL BE FORMED TO MATCH THE BOTTOM HALVES OF THE INFLOWING PIPES AND THE OUTFLOWING PIPE. MANHOLE FLOORS SHALL HAVE SLOPES OF 3 INCHES PER FOOT IN THE AREAS OUTSIDE OF THE FLOW CHANNELS SLOPED TOWARD THE FLOW CHANNELS.

3. GRATE FRAME TO BE INSTALLED ON THIN MORTAR CUSHION TO INSURE FULL SUPPORT ALONG BRICK WALLS. CONCRETE USED FOR INLET CONSTRUCTION SHALL BE CONCRETE PAVEMENT MIX.

4. THE ENDS OF ALL PIPES IN MANHOLES SHALL BE CUT OFF FLUSH WITH THE INSIDE FACE OF MANHOLE WALL.

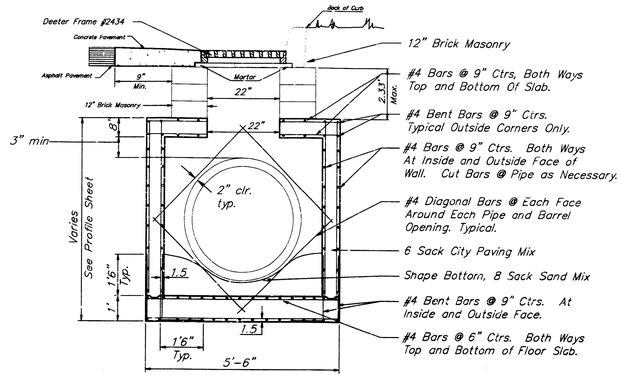

REINFORCED CONCRETE SPECIAL DROP INLET
SECTION A-A
STATION 2+10.2

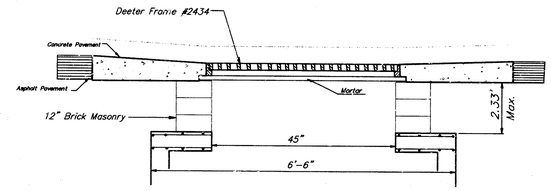

INLET BRICK STACK LESS THAN 2.33'
SECTION B-B
STATION 2+10.2

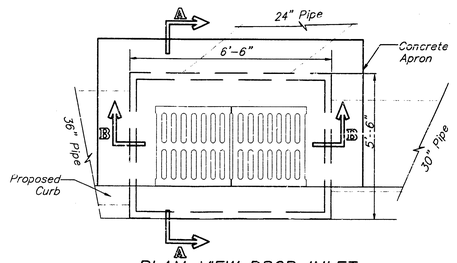

PLAN VIEW DROP INLET
STATION 2+10.2

REINFORCED CONCRETE SPECIAL INLET
STORMWATER SEWER
HUNTINGTON PLACE 5TH ADDITION

BAUGHMAN COMPANY P.A.
ENGINEERING, SURVEYING, & PLANNING
316-262-7271 • 315 ELLIS • WICHITA, KANSAS 67211

PROJECT NUMBER	SHEET
677PPS (607881)	2 OF 3

DESIGN	DRAWN	APPROVED	DATE	SCALE
JJL/DVJ/JB	JJL	BP	DEC. 1996	

ENG\HUNTS\SHS2

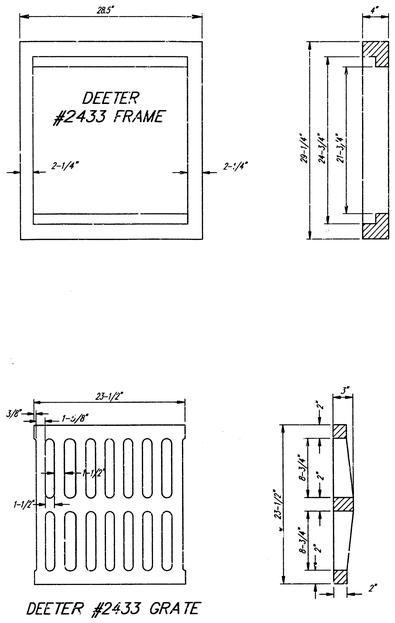

DEETER #2433 GRATE

NOTE: Grates shall be imprinted on the top surface with "CITY OF WICHITA" using letters at least 1" in height. Other marking methods may be approved by the engineer.

24" x 24" Frame and Grate Detail

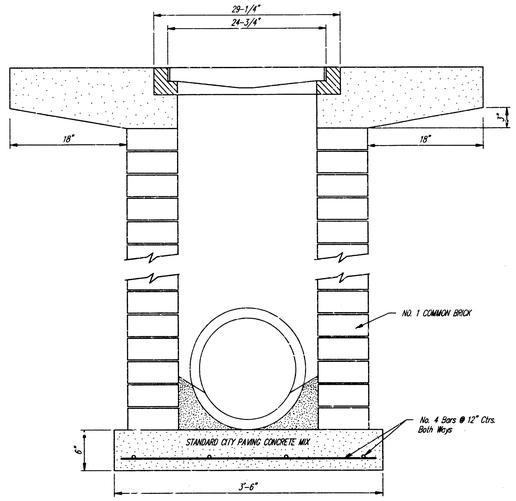

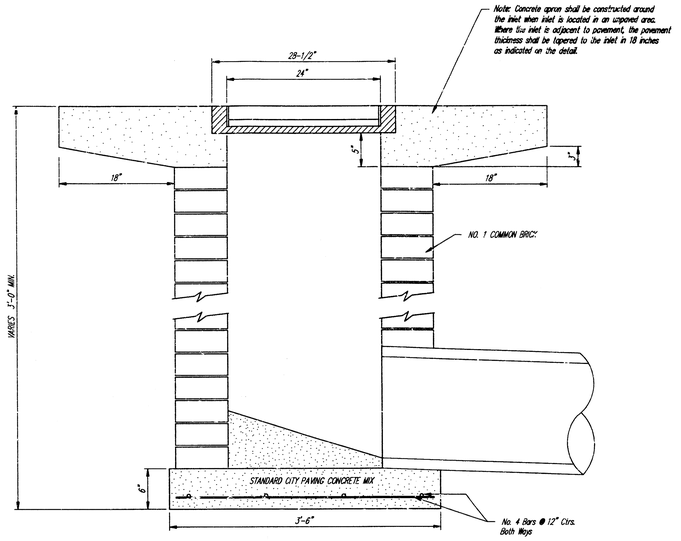

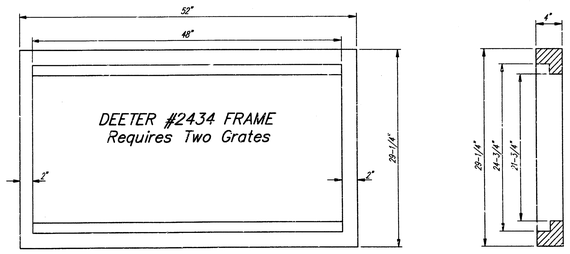

Double 24" x 24" Frame Detail

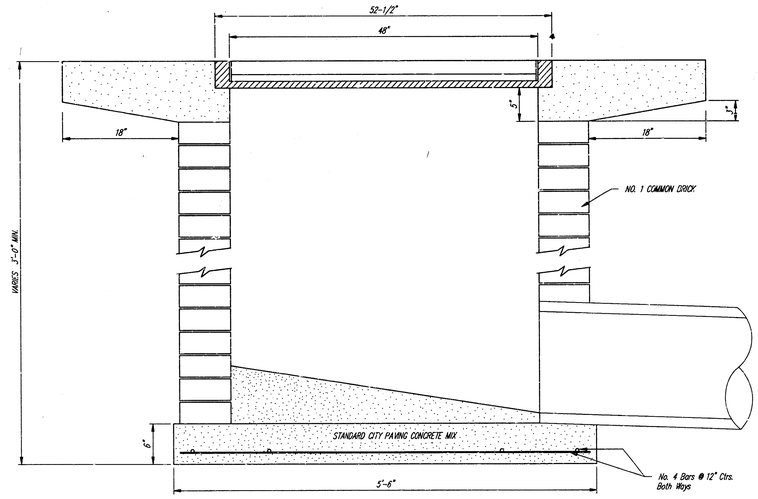

CITY OF WICHITA STANDARD

DROP INLET

HUNTINGTON PLACE 5TH ADDITION

BAUGHMAN COMPANY P. A.

ENGINEERING, SURVEYING, & PLANNING

316-262-7271 • 315 ELLIS • WICHITA, KANSAS 67211

PROJECT NUMBER					SHEET
677PPS (607861)					3 OF 3
DESIGN	DRAWN	APPROVED	DATE	SCALE	
			14-4-1-2		

ENG\HUNT5\SWS3