SHEET NO.	TOTAL SHEETS
1	8

CITY OF WICHITA, KANSAS
MICHAEL E. LINDEBAK, P.E., CITY ENGINEER

STORM WATER SEWER IMPROVEMENTS

IN

BRADLEY FAIR 2ND ADDITION

CITY OF WICHITA PRIVATE PROJECT NO. 693PPS (607861)

INDEX OF SHEETS

1. TITLE SHEET
2. PLAN AND PROFILE - LINE NO. 1
3. PLAN AND PROFILE - LINE NO. 2
4. TEMPORARY CHANNEL PROFILE
5. TYPE 22 CURB INLET DETAILS
6. SEDIMENT AND EROSION CONTROL STANDARD DETAILS
7. SEDIMENT AND EROSION CONTROL STANDARD DETAILS INLET PROTECTION
8. AREA INLET DETAILS

PROJECT SURVEY CONTROL

CITY OF WICHITA VERTICAL DATUM

C.O.W BM 21: CHIS "d" ON TOP OF CURB, SOUTH CURB RETURN, SOUTH SIDE ROCKHILL RD. WEST SIDE ROCK RD. ELEV= 209.01

BM 40: CHIS "d" ON TOP OF CURB 70'± SOUTH OF SOUTH-EAST CORNER "OUTBACK STEAKHOUSE", NORTH SIDE LOT 1, BLOCK 1, BRADLEY FAIR 2ND ADDITION. ELEV= 211.62

BM 41: RAILROAD SPIKE IN WEST FACE 12" ELM, 80' EAST AND 120' NORTH OF NORTHWEST CORNER RESERVE "A", BRADLEY FAIR 2ND ADDITION ELEV= 204.49

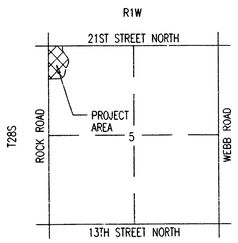

VICINITY MAP

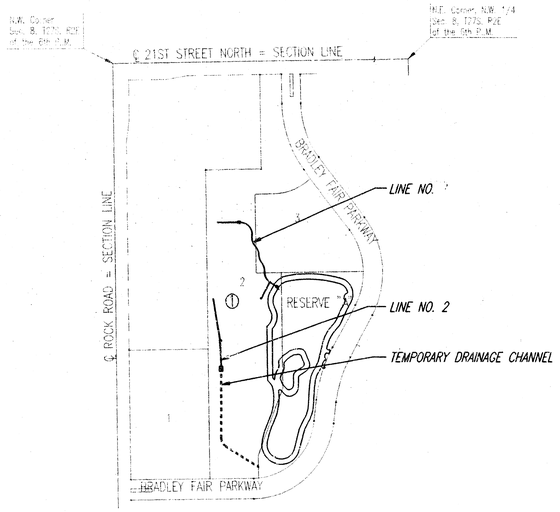

SCALE: 1" = 300'

GENERAL NOTES

UNDERGROUND UTILITY SERVICE LINES AND OVERHEAD UTILITY POLE LINES ARE TO BE ADJUSTED AS NECESSARY BY OTHERS PRIOR TO CONSTRUCTION UNLESS THE PLANS SPECIFICALLY CALL FOR THEIR ADJUSTMENT BY THE CONTRACTOR. EXISTING UTILITIES AND THEIR LOCATION, AS SHOWN ON THE PLANS, REPRESENT THE BEST INFORMATION OBTAINABLE FOR DESIGN. LOCATION INFORMATION HAS BEEN OBTAINED FROM THE VARIOUS UTILITY COMPANIES AND IS EITHER FROM COMPANY RECORD DRAWINGS OR COMPANY PROVIDED FIELD LOCATIONS. THE CONTRACTOR WILL BE REQUIRED TO WORK AROUND EXISTING UTILITIES WITHIN THE RIGHT-OF-WAY WHICH DO NOT CONFLICT WITH PROPOSED CONSTRUCTION. CONTRACTOR SHALL SATISFY HIMSELF OF SUBSURFACE CONDITIONS PRIOR TO BIDDING.

TREES AND SHRUBS IN PUBLIC RIGHT-OF-WAY WHICH ARE IN DIRECT CONFLICT WITH PROPOSED NEW CONSTRUCTION SHALL BE REMOVED BY THE CONTRACTOR WITH THE ENGINEER'S APPROVAL. TREES AND SHRUBS WHICH ARE NOT IN DIRECT CONFLICT WITH PROPOSED NEW CONSTRUCTION SHALL BE SAVED AND PROTECTED FROM DAMAGE.

RUBBLE FROM THE REMOVAL OF MISCELLANEOUS STRUCTURES SHALL BE DISPOSED OF ON SITES TO BE PROVIDED BY THE CONTRACTOR AND APPROVED AS NOTED.

ALL DISPOSAL SITES MUST BE APPROVED BY THE KANSAS DEPARTMENT OF HEALTH AND ENVIRONMENT. MATERIAL EITHER STOCKPILED OR DISPOSED OF IN A FLOOD PLAIN WOULD REQUIRE A KANSAS STATE BOARD OF AGRICULTURE PERMIT. ANY MATERIAL DUMPED IN WATERS OF THE UNITED STATES OR WETLANDS IS SUBJECT TO U.S. CORPS OF ENGINEERS PERMITTING REGULATIONS. ANY MATERIAL BURIED OR STOCKPILED BEYOND APPROVED CONSTRUCTION LIMITS WOULD REQUIRE ADDITIONAL ARCHOLOGICAL INVESTIGATIONS UNLESS BURIED IN A PREVIOUSLY APPROVED BORROW LOCATION.

EXCESS EXCAVATED MATERIAL AND EXCESS TOPSOIL SHALL BE STOCKPILED OR WASTED WITHIN THE PLAT LIMITS. THE CONTRACTOR SHALL CONTACT THE OWNER'S ENGINEER AT 262-2691 FOR INFORMATION PERTAINING TO THE ACCEPTABLE LOCATIONS FOR THE DISPOSITION OF EXCESS MATERIAL. WASTE MATERIAL SHALL BE GRADED SMOOTH AND SLOPED TO DRAIN. THIS WORK SHALL BE CONSIDERED SUBSIDIARY TO OTHER BID ITEMS.

CONTRACTOR SHALL PROVIDE A MINIMUM FORTY-EIGHT (48) HOUR ADVANCE NOTICE (EXCLUDING WEEKENDS AND HOLIDAYS) PRIOR TO BEGINNING ANY EXCAVATION, TO KANSAS ONE-CALL SYSTEM, A UTILITY LOCATION SERVICE, AT (316) 687-2470 TO REQUEST THE FOLLOWING UTILITY COMPANIES TO LOCATE ALL EXISTING LINES WITHIN THE PROJECT AREA: K.G.&E. GAS, PEOPLES NATURAL GAS, K.G.&E. ELECTRIC, SOUTHWESTERN BELL TELEPHONE, MULTIMEDIA CABLEVISION, CITY OF WICHITA SEWER MAINTENANCE AND CITY OF WICHITA WATER DEPARTMENT.

THE CONTRACTOR SHALL BE RESPONSIBLE FOR PRESERVING PROPERTY IRONS. THE CONTRACTOR WILL BE REQUIRED TO RE-ESTABLISH ANY PROPERTY IRONS WHICH ARE DAMAGED OR DESTROYED BY HIS CONSTRUCTION OPERATIONS. SUCH IRONS SHALL BE RE-ESTABLISHED BY A LICENSED LAND SURVEYOR IN ACCORDANCE WITH STATE LAWS.

THE WATER DEPARTMENT SHALL FIELD LOCATE WATER VALVES ONE TIME DURING CONSTRUCTION WHEN REQUESTED BY THE CONTRACTOR. IT SHALL BE THE CONTRACTOR'S RESPONSIBILITY TO PRESERVE SUCH FIELD LOCATIONS DURING THE CONSTRUCTION PROCESS. WATER VALVES, WATER VALVE BOXES OR FIRE HYDRANTS DAMAGED DURING CONSTRUCTION SHALL BE REPAIRED BY THE CONTRACTOR AT HIS OWN EXPENSE.

THE CONTRACTOR SHALL ADJUST WATER VALVE BOXES AS DIRECTED BY THE ENGINEER. THIS WORK TO BE SUBSIDIARY TO OTHER BID ITEMS.

ALL AREAS DISTURBED DURING CONSTRUCTION SHALL BE SEEDED, FERTILIZED, AND MULCHED ACCORDING TO CITY OF WICHITA STANDARDS AND SPECIFICATIONS.

BRENT E. REMBERG — 8166 — LICENSED PROFESSIONAL ENGINEER — KANSAS — 3/27/97

MARCH, 1997

PLANS PREPARED BY
PROFESSIONAL ENGINEERING CONSULTANTS, P.A.
ENGINEERS
WICHITA, KANSAS

APPROVED AS NOTED
BY CITY ENGINEER OF WICHITA

SANITARY SEWERS _____

STORM SEWERS Steve Roth

DRIVEWAY APPROACHES _____

WATER MAINS _____

PAVING _____

NOTE TO CONTRACTOR

INSPECTION AND TESTING FOR THIS PROJECT IS TO BE PROVIDED BY A LICENSED CONSULTING ENGINEERING FIRM UNDER CONTRACT WITH THE OWNER/DEVELOPER. SAID INSPECTION TO BE IN ACCORDANCE WITH THE CITY OF WICHITA STANDARD CONSTRUCTION ENGINEERING PRACTICES AND CERTIFIED BY A LICENSED PROFESSIONAL ENGINEER. NO WORK SHALL BE PERFORMED IN DEDICATED EASEMENTS OR PUBLIC RIGHT-OF-WAY BY THE CONTRACTOR WITHOUT SUCH INSPECTION NOR SHALL ANY WORK BE COMMENCED IN DEDICATED EASEMENTS OR PUBLIC RIGHT-OF-WAY WITHOUT WRITTEN AUTHORIZATION BY THE CITY ENGINEER.

DGN#: PDM OPER: PDM SCALE: 1=150.00
C:\1997\97098\DGN\TITLE.DWG 03-24-1997 4:58:25 pm

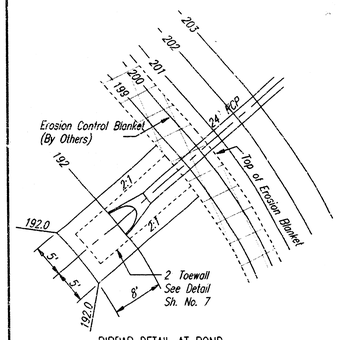

RIPRAP DETAIL AT POND
SCALE: 1"=10'

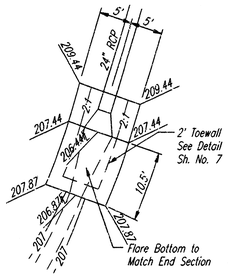

RIPRAP DETAIL AT DITCH
SCALE: 1"=10'

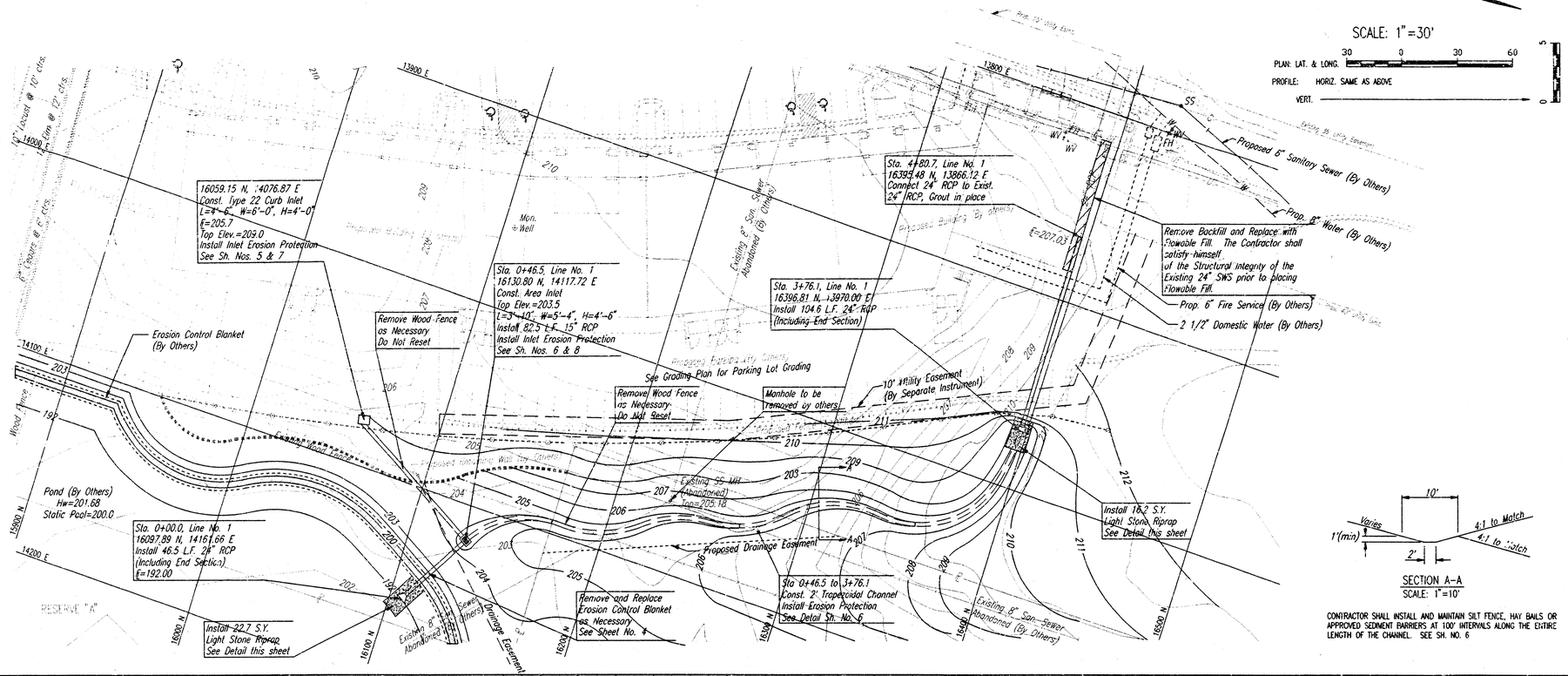
SCALE: 1"=30'
PLAN: LAT. & LONG.
PROFILE: HORIZ. SAME AS ABOVE
VERT.
16059.15 N, 14076.87 E
Const. Type 22 Curb Inlet
L=4'-6", W=6'-0", H=4'-0"
f=205.7
Top Elev.=209.0
Install Inlet Erosion Protection
See Sh. Nos. 5 & 7
Sta. 0+46.5, Line No. 1
16130.80 N, 14117.72 E
Const. Area Inlet
Top Elev.=203.5
L=3'-10", W=5'-4", H=4'-6"
Install 82.5 L.F. 15" RCP
Install Inlet Erosion Protection
See Sh. Nos. 6 & 8
Sta. 4+80.7, Line No. 1
16395.48 N, 13866.12 E
Connect 24" RCP to Exist.
24" RCP, Grout in place
Sta. 3+76.1, Line No. 1
16396.81 N, 13970.00 E
Install 104.6 L.F. 24" RCP
(Including End Section)
Remove Backfill and Replace with
Flowable Fill. The Contractor shall
satisfy himself
of the Structural Integrity of the
Existing 24" SWS prior to placing
Flowable Fill.
Proposed 6" Sanitary Sewer (By Others)
Prop. 8" Water (By Others)
Prop. 6" Fire Service (By Others)
2 1/2" Domestic Water (By Others)
Remove Wood Fence
as Necessary
Do Not Reset
Erosion Control Blanket
(By Others)
See Grading Plan for Parking Lot Grading
Remove Wood Fence
as Necessary
Do Not Reset
Manhole to be
Removed by others
10' Utility Easement
(By Separate Instrument)
Existing 8" San. Sewer
Abandoned (By Others)
Existing 48" San. Sewer
Abandoned (By Others)
Existing 54" MH
Abandoned
Top=205.18
Pond (By Others)
Hw=201.68
Static Pool=200.0
Sta. 0+00.0, Line No. 1
16097.89 N, 14161.66 E
Install 46.5 L.F. 24" RCP
(Including End Section)
f=192.00
Proposed Drainage Easement
Install 16.2 S.Y.
Light Stone Riprap
See Detail this sheet
Sta. 0+46.5 to 3+76.1
Const. 2' Trapezoidal Channel
Install Erosion Protection
See Detail Sh. No. 6
Remove and Replace
Erosion Control Blanket
as Necessary
See Sheet No. 4
Install 22.7 S.Y.
Light Stone Riprap
See Detail this sheet
Existing 8" San. Sewer
Abandoned (By Others)
Drainage Easement
RESERVE "A"
Mon.
Well
Wood Fence
Top of Wood Fence
Top of Bank
Top of Bank
Existing Building
Existing Building
Existing Building

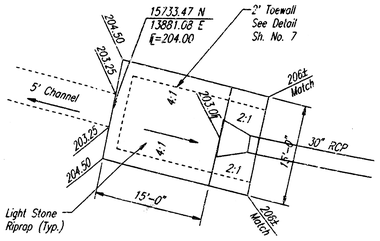

RIPRAP DETAIL
SCALE: 1"=10'

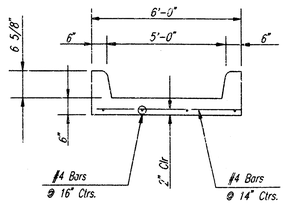

SECTION B-B
NO SCALE

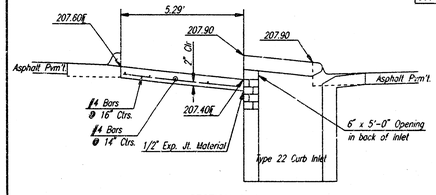

SECTION A-A
NO SCALE

CONCRETE FLUME DETAILS



SCALE: 1"=30'
PLAN: LAT. & LONG. 30 0 30 60
PROFILE: HORIZ. SAME AS ABOVE
VERT. 5 0

* Contractor shall support electric and telephone cables to protect form damage during construction.

SECTION C-C
NO SCALE

CONCRETE FLUME DETAILS

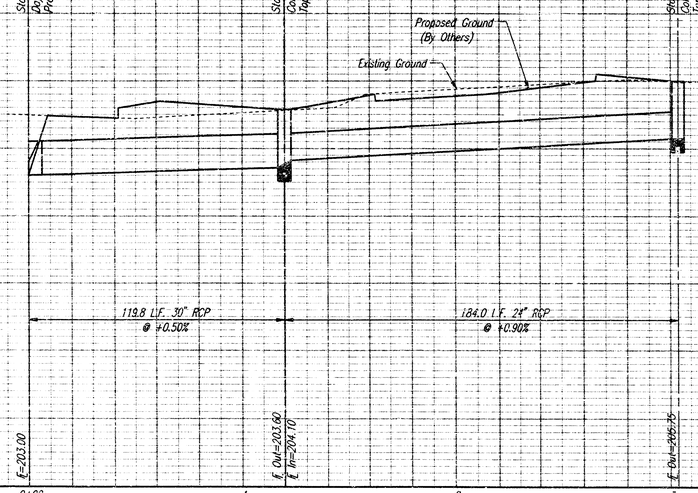

PBE

PROFESSIONAL ENGINEERING CONSULTANTS, P.A.
ENGINEERS
WICHITA, KANSAS

BRADLEY FAIR 2ND ADDITION - NORTH SWS

LINE NO. 2
STA. 0+00.0 TO STA. 3+03.8

C.O.W. PRIVATE PROJ. NO. 69.9PFS (607861)

Designed by PDM
Drawn by DEF
Job No. 97098
Date MAR., 1997

Sheet 3 of 8

BRENT E. REMBERT
NUMBER 21188
STATE OF KANSAS
PROFESSIONAL ENGINEER
3/27/97

DSNR FROM OPER DIR SCALE: 1=30.00
O:\SURVEY\BRADLEY\ENGR-2.DWG 03-25-1997 2:40:25 pm

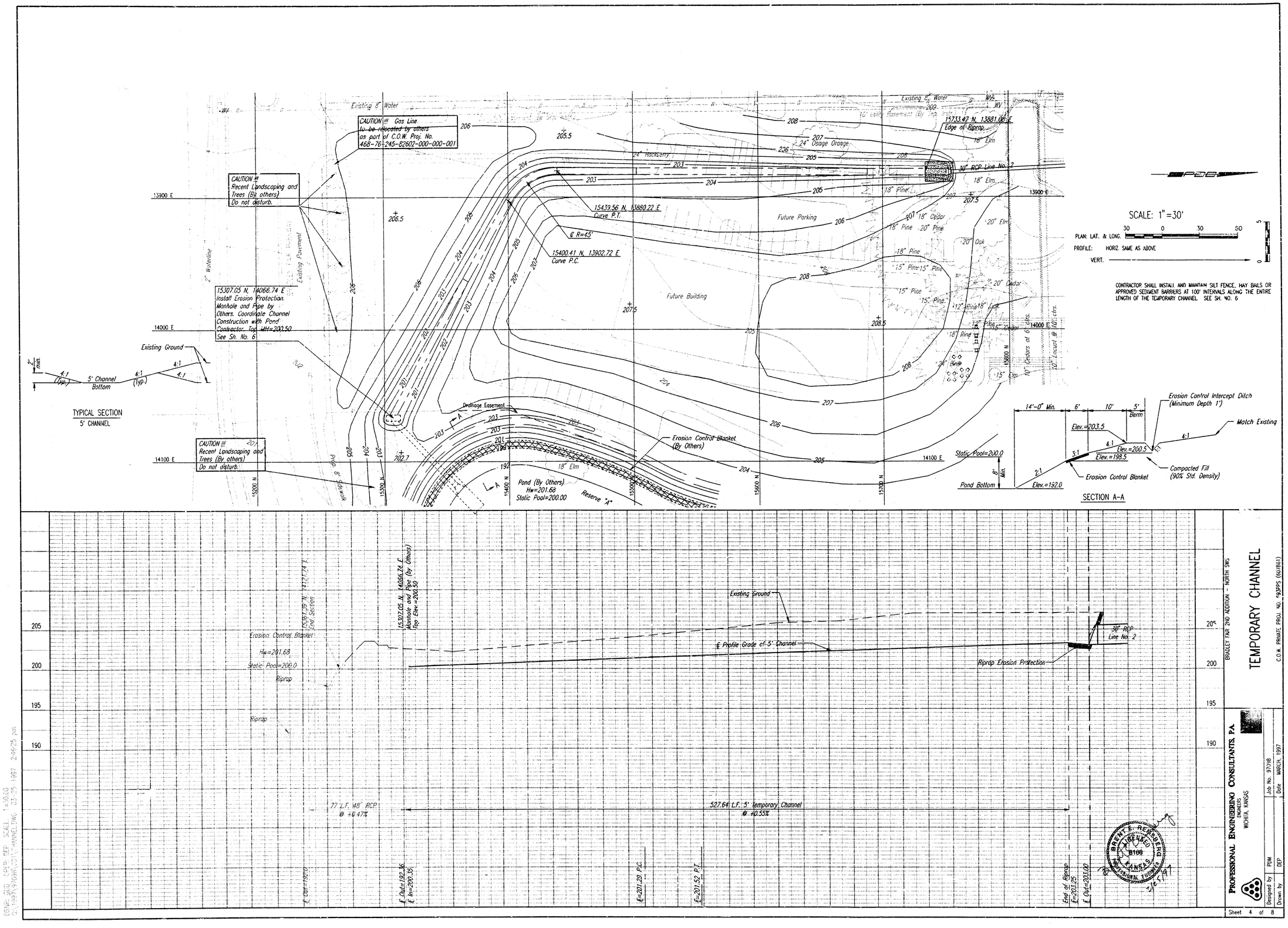

BRADLEY FAIR 2ND ADDITION - NORTH SWS

TEMPORARY CHANNEL

C.O.W. PRIVATE PROJ. NO. 593PPS (607861)

PROFESSIONAL ENGINEERING CONSULTANTS, P.A.
ENGINEERS
WICHITA, KANSAS

Job No. 97098
Date MARCH, 1997
Designed by PDM
Drawn by DEP

Sheet 4 of 8

FHWA REGION NO.	STATE	PROJECT NO.	YEAR	SHEET NO.	TOTAL SHEETS
7	KANSAS	663PPS1607861	1997	5	8

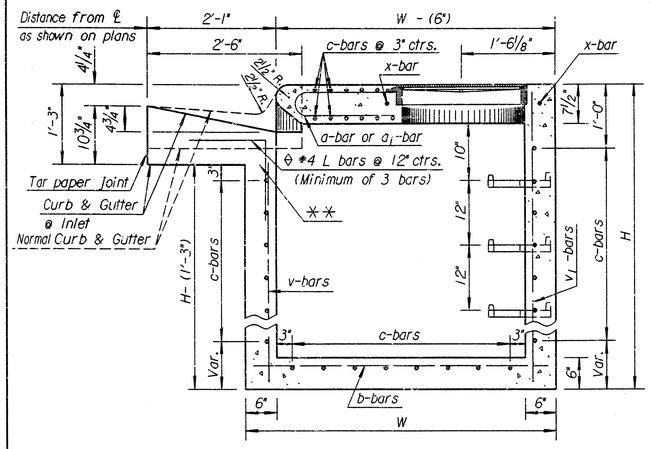

SECTION A-A

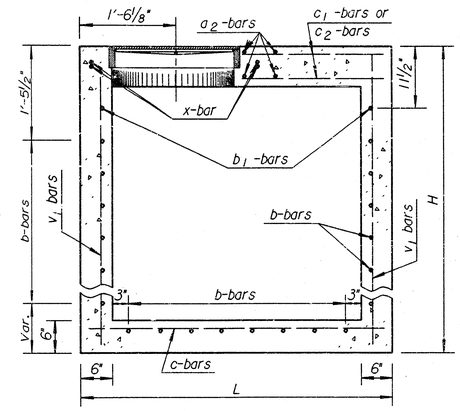

SECTION B-B

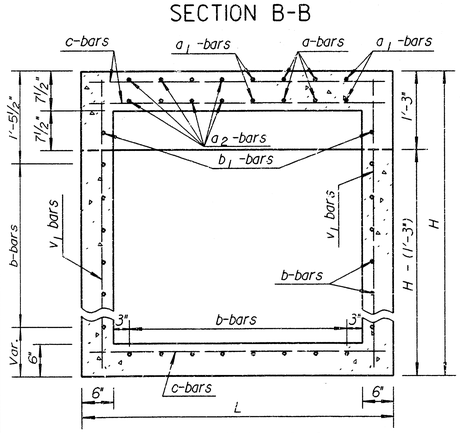

SECTION C-C

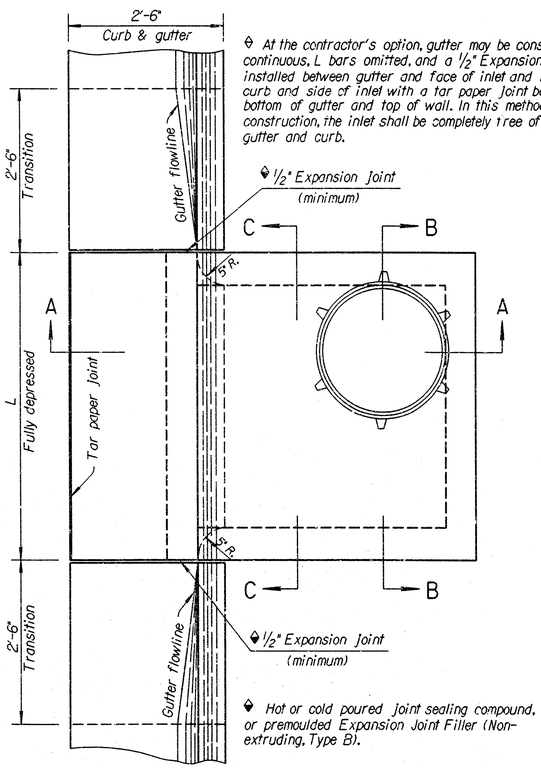

◆ Hot or cold poured joint sealing compound, or premoulded Expansion Joint Filler (Non-extruding, Type B).

PLAN

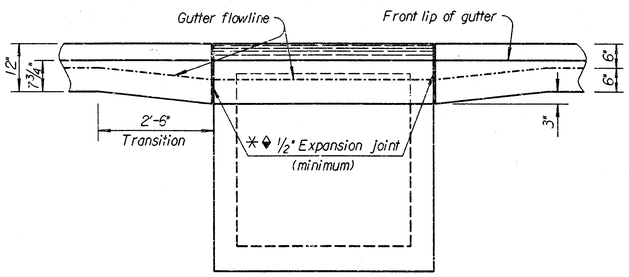

ELEVATION

Note: Transition gutter from normal depth of 6" to 9" at inlet in 2'-6". Curb and Gutter sections shall be shaped as shown where required by the installation of curb inlets. This work will be subsidiary to other bid items.

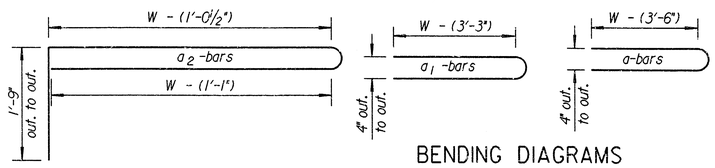

BENDING DIAGRAMS

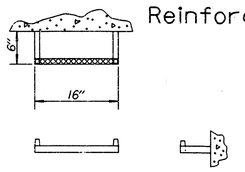

STEP DETAILS

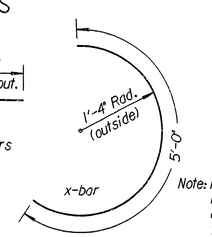

Note: Reinforcing steel for L bars is not included in the steel quantity and is subsidiary to the other inlet items.

GENERAL NOTES

Use Class A Concrete throughout. All exposed edges shall be finished with an edging tool.
At the contractors option Class A Concrete (AE) or mix used in concrete pavement may be used throughout.
In general, pipes will enter and leave manhole at various positions. Where possible bend bars around pipes.
Floor of manhole to be shaped as shown in various "EXAMPLES" with unreinforced Class "A" Concrete.
Manhole opening and steps, where used, shall be placed to afford easy access to top of shaped invert. Top reinforcing bars to be adjusted accordingly.
All castings shall be gray iron and shall comply with the KDOT Standard Specifications.
When so ordered by the Engineer, the top of the manhole shall be sloped slightly to approximately fit the ground line or other conditions.
Dimensions and weights of cast iron as shown on this sheet are minimum. Larger dimensions and/or heavier weights of cast iron may be used.
Steps shall be installed in all storm sewer inlets when specified in the plans or when "H" is equal to or greater than six feet. Steps shall comply with the KDOT Standard Specification.
No reduction in concrete quantities shall be made for pipe openings.
When directed by the Engineer, a small opening in the back of the inlet shall be provided in order to drain a low area. Reinforcing bars shall extend through the opening. No reduction in concrete quantities will be made for this opening.
No addition in concrete quantities shall be made for shaping floor of inlet.
No reduction in pay length of curb, gutter, or curb & gutter will be made through the inlet area.
The weight of castings includes no allowance for fillets and overruns.
Curb and Gutter sections shall be shaped as shown where required by the installation of curb inlets. This work shall be subsidiary to other bid items.
See sheet entitled "Reinforcing Steel for Inlets and Manholes" for details and quantities.
For additional notes and details on Light Type Cast Iron Manhole Cover and Ring Type C and Cast Iron Steps, see Standard RD633 "Reinforced Concrete Manhole".
All reinforcing steel shall be #4 at 6" centers except where noted. Minimum clear distance to reinforcement shall be 1 1/2".

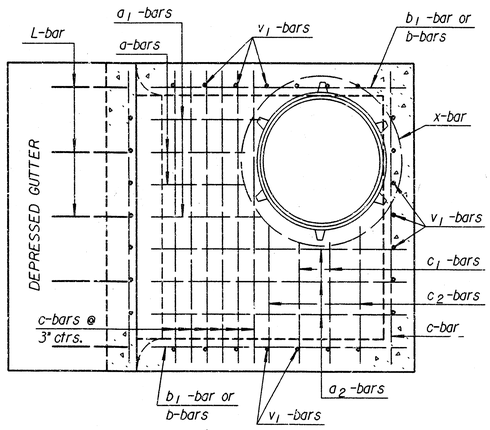

Reinforcing Steel Top View

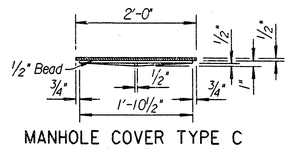

MANHOLE COVER TYPE C
(Weight= 64 lbs.)

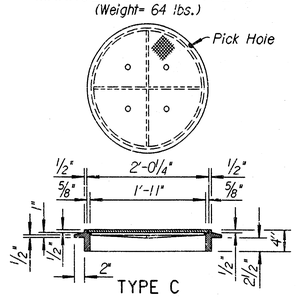

TYPE C

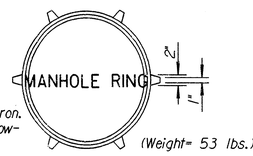

NOTE: All manhole castings are cast iron. Weight of castings includes no allowance for fillets and overruns.

(Weight= 53 lbs.)

*LIGHT TYPE
MANHOLE COVER & RING

*Rings with four equally spaced lugs will be permitted.

NO.	DATE	REVISIONS	BY	APP'D
3	12-8-94	Added misc. notes	R.J.S.	J.O.B.
2	12-27-93	Delete paint note	R.J.S.	J.O.B.
1	1-30-92	Rev. paint&step notes, ent. on CADD	R.J.S.	J.O.B.

KANSAS DEPARTMENT OF TRANSPORTATION

TYPE 22 CURB INLET

RD646

FHWA APPROVAL	1-12-95	APP'D. James O. Brewer	
DESIGNED	DETAILED	QUANTITIES	TRACED Bowser
DESIGN CK.	DETAIL CK.	QUAN.CK.	TRACE CK. Seitz

Drawn By: KDOT Plotted: 3-4-97
File: h:\dotepw\rd646.dgn

SHEET NO.	TOTAL SHEETS
6	8

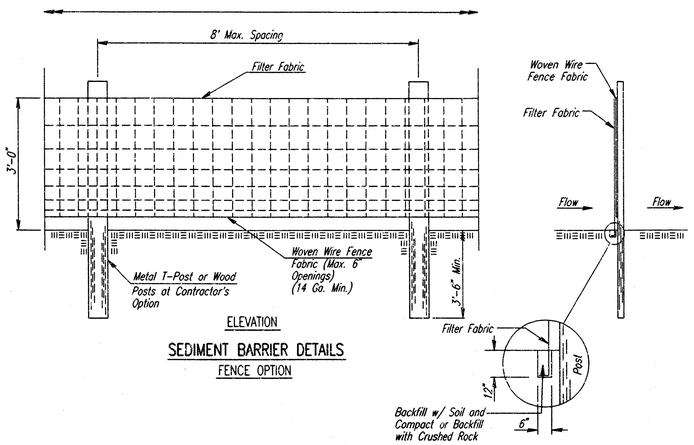

ELEVATION

SEDIMENT BARRIER DETAILS

FENCE OPTION

ANCHOR TRENCH DETAIL

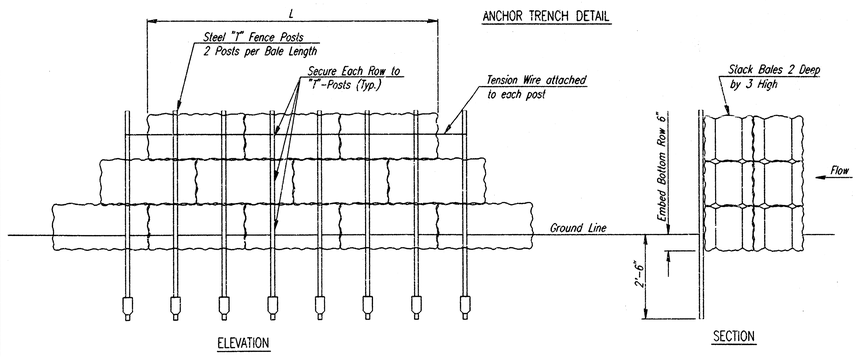

ELEVATION SECTION

SEDIMENT BARRIER DETAILS

HAY/STRAW BALE OPTION

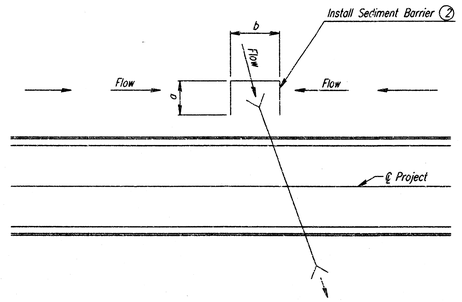

SEDIMENT CONTROL
TYPICAL CROSS ROAD PIPE LOCATION

(2) "a" Dimension = Ditch bottom width +10'
"b" Dimension = End Section or Headwall width +10'

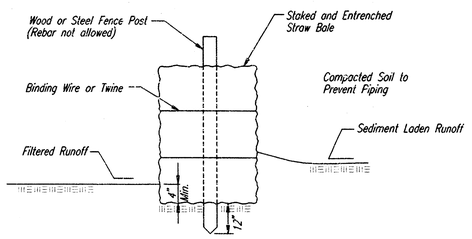

LINEAR SEDIMENT BARRIER

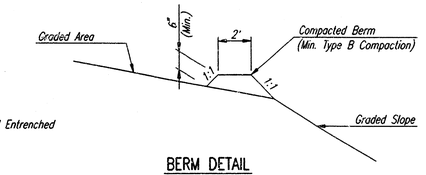

BERM DETAIL

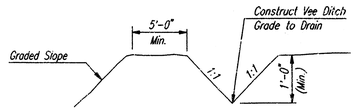

INTERCEPT DITCH DETAIL

TEMPORARY EROSION CONTROL DETAILS FOR SLOPE PROTECTION

The Engineer may determine that the height of Berm or depth of Ditch should be increased over that shown if Drainage conditions are producing Slope Erosion.

1. SEDIMENT BARRIERS SHALL BE INSTALLED AT LOCATIONS SHOWN ON THE PLANS OR AS DIRECTED BY THE ENGINEER. ADDITIONAL SEDIMENT BARRIERS WILL BE INSTALLED AT LOCATIONS AS DIRECTED BY THE ENGINEER WITH NO ADJUSTMENT IN UNIT PRICE.

2. SEDIMENT BARRIERS SHALL BE ERECTED PRIOR TO THE COMMENCEMENT OF EARTHWORK OPERATIONS IN A GIVEN BASIN. REMOVAL AND DISPOSAL OF ACCUMULATED SILT AND DEBRIS AND/OR REMOVAL AND RECONSTRUCTION OF SEDIMENT BARRIERS WILL BE PERFORMED THROUGHOUT THE PROJECT LIFE WHEN DEBRIS REACHES ONE-THIRD THE FENCE HEIGHT OR AS DEEMED NECESSARY BY THE ENGINEER. SEDIMENT BARRIERS AND ACCUMULATED DEBRIS SHALL BE REMOVED AND DISPOSED OF BY THE CONTRACTOR AFTER TURF COVER HAS BEEN ESTABLISHED, UNLESS OTHER ARRANGEMENTS HAVE BEEN AGREED TO.

3. FILTER FABRIC FOR FENCE OPTION SEDIMENT BARRIERS SHALL BE RESISTANT TO ULTRAVIOLET LIGHT. MATERIALS MAY BE SUPPLIED BY THE FOLLOWING MANUFACTURERS:

MIRAFI, INC.	–	100X
HOECHST FIBERS INDUSTRIES	–	TREVIRA 1115
EXXON	–	TYPAR 3301 W

MATERIALS SUPPLIED BY THE ABOVE NAMED MANUFACTURERS SHALL BE ACCEPTED UPON VISUAL INSPECTION BY THE ENGINEER. OTHER COMPARABLE MATERIALS MAY BE USED IF APPROVED BY THE ENGINEER.

FILTER FABRIC SHALL BE ATTACHED TO FENCE FABRIC BY MEANS OF TIE WIRES OR HOG RINGS PRIOR TO ATTACHMENT OF FENCE/FABRIC COMBINATION ONTO THE POSTS.

4. BALES USED FOR SEDIMENT BARRIERS MAY BE EITHER HAY OR STRAW, PROVIDED THEY ARE SOUND AND INTACT.

5. TEMPORARY EROSION CONTROL BERMS AND/OR INTERCEPT DITCHES SHALL BE CONSTRUCTED AT LOCATIONS SHOWN ON THE PLANS OR AS DIRECTED BY THE ENGINEER. ADDITIONAL BERMS AND/OR DITCHES MAY BE REQUIRED AT NO ADJUSTMENT IN UNIT PRICE(S).

WHERE TEMPORARY EROSION CONTROL BERMS AND/OR INTERCEPT DITCHES ARE USED, ALL AREAS WHERE FLOW IS CONCENTRATED SHALL BE PROTECTED BY SILTATION BARRIERS PRIOR TO DISCHARGING INTO ANY DITCH, STORM SEWER, OR WATERCOURSE.

6. MEASUREMENT AND PAYMENT: THE ITEM "SEDIMENT BARRIERS", "EROSION CONTROL INTERCEPT DITCH", "EROSION CONTROL BERM" AND "LINEAR SEDIMENT BARRIERS" SHALL BE MEASURED AND PAID FOR AT THE CONTRACT UNIT PRICE BID PER LINEAL FOOT COMPLETE IN PLACE OF THE VARIOUS BID ITEMS SHOWN. SAID PRICE SHALL BE CONSIDERED FULL COMPENSATION FOR EXCAVATION, COMPACTION, BACKFILL, SEDIMENT AND DEBRIS REMOVAL AND DISPOSAL, AND ALL MATERIALS, LABOR, TOOLS, AND INCIDENTALS NECESSARY TO COMPLETE THE WORK. RECONSTRUCTION OF EROSION CONTROL MEASURES WHICH ARE DESTROYED BY WIND, FLOOD, FIRE, OR BY THE ACTIONS OF THE CONTRACTOR OR OTHERS SHALL BE PERFORMED BY THE CONTRACTOR AS DIRECTED BY THE ENGINEER AT NO ADDITIONAL COST. WHERE ADJUSTMENTS IN QUANTITIES ARE REQUIRED BY FIELD CONDITIONS, THERE SHALL BE NO ADJUSTMENT IN UNIT PRICE.

THE ITEM "TEMPORARY SEEDING AND MULCHING" SHALL BE MEASURED AND PAID FOR AT THE CONTRACT PRICE BID PER ACRE OR PER LUMP SUM, AS INDICATED IN THE PROPOSAL.

DSNR: PDM OPER: DEP SCALE: 1=1.00
Q:\1997\97098\001\ERSDTL1.DWG 03-07-1997 8:56:49 am

BRADLEY FAIR 2ND ADDITION – NORTH SWS

EROSION CONTROL AND SEDIMENT BARRIER DETAILS

C.O.W. PRIVATE PROJ. NO. 693PPS (607861)

PROFESSIONAL ENGINEERING CONSULTANTS, P.A.
ENGINEERS
WICHITA, KANSAS

Designed by	PDM	Checked by	
Drawn by	DEP	Date MAR., 1997	Job No. 97098-1

SHEET NO.	TOTAL SHEETS
7	8

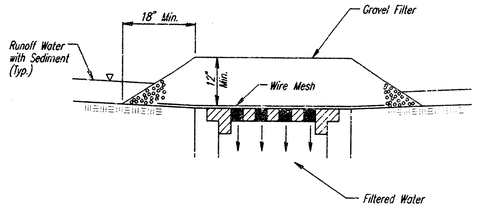

AREA INLET PROTECTION
GRAVEL AND WIRE MESH

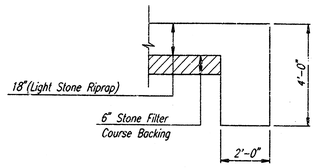

TYPICAL SECTION THRU TOEWALL
NO SCALE

NOTES

1. ALL RIPRAP FOR THIS PROJECT SHALL BE NATURAL STONE. NEITHER BROKEN CONCRETE, FABRIC ENVELOPE, NOR PREMIXED DRY PACKAGED CONCRETE BAG ALTERNATES WILL BE ALLOWED.
2. TOEWALLS SHALL BE INSTALLED ALONG ALL EDGES OF STONE RIPRAP.
3. GROUTING OF THE SURFACE OF THE RIPRAP SHALL NOT BE PERFORMED. GROUTING OF THE TOEWALLS SHALL BE PERFORMED PER CITY SPECIFICATIONS.

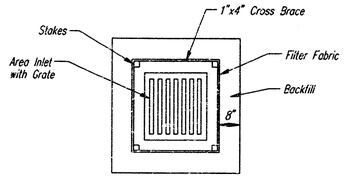

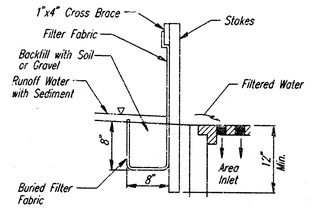

AREA INLET PROTECTION
FILTER FABRIC

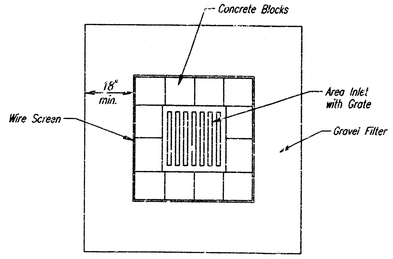

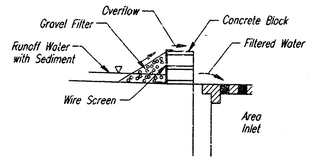

AREA INLET PROTECTION
BLOCK AND GRAVEL FILTER

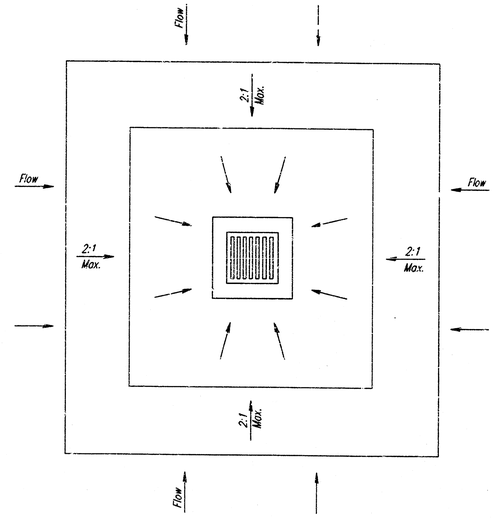

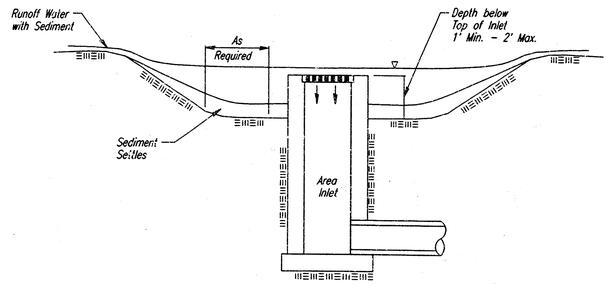

AREA INLET PROTECTION
EXCAVATED AREA INLET
SEDIMENT TRAP

ADAPTED FROM: VIRGINIA SOIL AND WATER CONSERVATION COMISSION, 1985 AND DRAINAGE CRITERIA MANUAL, DENVER URBAN DRAINAGE AND FLOOD CONTROL DISTRICT 9-1-92

NOTE: INLET SIPE MAY VARY FROM THAT SHOWN.

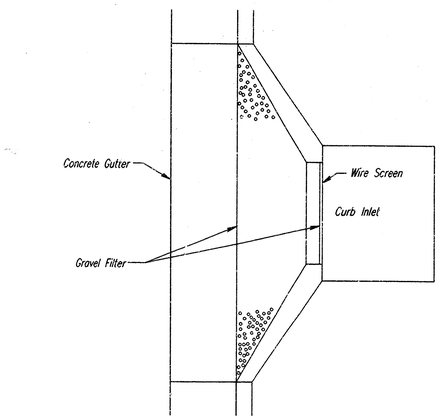

CURB INLET PROTECTION
GRAVEL AND WIRE MESH FILTER

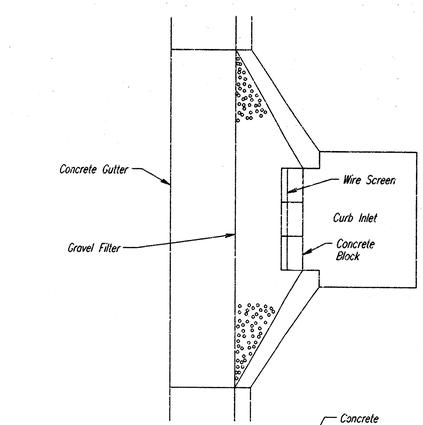

CURB INLET PROTECTION
BLOCK AND GRAVEL FILTER

GENERAL NOTES
INLET PROTECTION

1. INLET PROTECTION METHOD MAY BE ANY OF THE APPLICABLE TYPES SHOWN, AT THE CONTRACTORS OPTION.
2. GRAVEL FILTER SHALL BE A DURABLE, WELL-GRADED SAND-GRAVEL OR CRUSHED STONE, MAXIMUM 1-1/2 IN. SIPE. AS AN ALTERNATE GRAVEL FILLED BAGS OF BURLAP OR OTHER FABRIC MAY BE USED. WHERE BAGS ARE USED, THE WIRE SCREEN, WHERE SHOWN, MAY BE OMITTED.
3. FILTER FABRIC, WHERE USED, SHALL BE RESISTANT TO ULTRAVIOLET LIGHT. MATERIALS MAY BE SUPPLIED BY THE FOLLOWING MANUFACTURERS:

MIRAFI, INC.	-	100X
HOECHST FIBERS INDUSTRIES	-	TREVIRA 1115
EXXON	-	TYPAR 3301 W

MATERIALS SUPPLIED BY THE ABOVE NAMED MANUFACTURERS SHALL BE ACCEPTED UPON VISUAL INSPECTION BY THE ENGINEER. OTHER COMPARABLE MATERIALS MAY BE USED IF APPROVED BY THE ENGINEER.

4. INLET PROTECTION SHALL BE ERECTED AS SOON AS THE STRUCTURE HAS BEEN BACKFILLED. MEASURES SHALL BE TAKEN TO PRECLUDE ENTRY OF SEDIMENT INTO THE STORM WATER SEWER SYSTEM DURING CONSTRUCTION OF THE STRUCTURE.
5. REMOVAL AND DISPOSAL OF ACCUMULATED SILT AND DEBRIS AND/OR REMOVAL AND RECONSTRUCTION OF INLET PROTECTION INSTALLATIONS SHALL BE PERFORMED THROUGHOUT THE PROJECT LIFE WHENEVER DEBRIS REACHES ONE-THIRD THE BARRIER HEIGHT, OR AS DEEMED NECESSARY BY THE ENGINEER. ULTIMATE REMOVAL AND DISPOSAL OF INLET PROTECTION AND DEBRIS WILL BE PERFORMED BY THE DEVELOPER.
6. MEASUREMENT AND PAYMENT: THE ITEM "INLET PROTECTION" SHALL BE MEASURED AND PAID FOR AT THE CONTRACT UNIT PRICE BID PER EACH FOR EACH INLET LOCATION PROTECTED REGARDLESS OF METHOD SELECTED BY THE CONTRACTOR. SAID PRICE SHALL BE CONSIDERED FULL COMPENSATION FOR EXCAVATION, COMPACTION, BACKFILL, SEDIMENT, AND DEBRIS REMOVAL AND DISPOSAL AND ALL LABOR, MATERIALS, TOOLS, AND INCIDENTALS NECESSARY TO COMPLETE THE WORK. RECONSTRUCTION OF INLET PROTECTION INSTALLATION DUE TO DAMAGE BY WIND, FLOOD, FIRE, ETC. OR DUE TO ACTIONS BY THE CONTRACTOR OR OTHERS SHALL BE PERFORMED BY THE CONTRACTOR AS DIRECTED BY THE ENGINEER AT NO ADDITIONAL COST.

BRADLEY FAIR 2ND ADDITION - NORTH SWS

SEDIMENT AND EROSION CONTROL STANDARD DETAILS AND INLET PROTECTION

C.O.W. PRIVATE PROJ. NO. 693PPS (607851)

PROFESSIONAL ENGINEERING CONSULTANTS, P.A.
ENGINEERS
WICHITA, KANSAS

Designed by	MWB, PDM	Checked by	
Drawn by	DEP	Date MAR., 1997	Job No. 97098-1

REVISED 1/95

DSNR: PDM OPER: DEP SCALE: 1=1.00
Q:\1997\9709BV\001\ERSDTL2.DWG 03-07-1997 8:57:47 am

SHEET NO.	TOTAL SHEETS
6	9

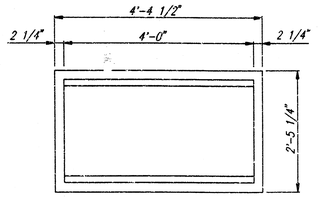

FRAME DETAIL
(Wt.=460 lbs.)

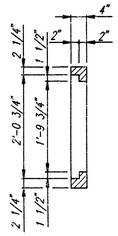

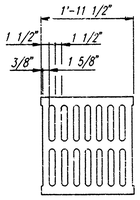

GRATE DETAIL
(Wt.=180 lbs.)

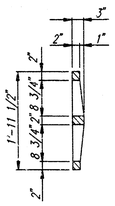

GENERAL NOTES

CONCRETE SHALL BE C.O.W. STANDARD PAVING MIX. ALL EXPOSED EDGES SHALL BE FINISHED WITH AN APPROVED EDGING TOOL.

REINFORCING STEEL SHALL BE A MINIMUM GRADE 40, A.S.T.M. A615. ALL DIMENSIONS RELATIVE TO PLACEMENT OF REINFORCING ARE TO THE CENTERLINE OF BARS UNLESS OTHERWISE NOTED.

INLET CASTINGS SHALL BE MANUFACTURED USING GOOD QUALITY GRAY IRON CONFORMING TO CLASS 30 OF A.S.T.M. DESIGNATION A-48. DIMENSIONS AND WEIGHTS SHOWN ON THE DETAILED DRAWINGS SHALL BE CONSIDERED AS MINIMUM REQUIREMENTS AND ANY DEVIATIONS FROM THE DIMENSIONS SHOWN MUST BE SPECIFICALLY APPROVED. THE FINISHED CASTINGS SHALL BE OF UNIFORM QUALITY, FREE FROM BLOWHOLES, POROSITY, HARD SPOTS, SHRINKAGE DISTORTIONS OR OTHER DEFECTS.

CONSTRUCTION REQUIREMENTS AND MATERIALS FOR MASONRY WALLS SHALL CONFORM TO THE REQUIREMENTS OF THE STANDARD SPECIFICATIONS.

INLET FLOOR SHALL BE SHAPED WITH UNREINFORCED CONCRETE (8 SACK SAND MIX) TO CREATE FLOW CHANNELS AND TO INCREASE HYDRAULIC EFFICIENCY SUCH THAT THE INLET WILL BE SELF CLEANING BETWEEN ALL INLET AND/OR OUTLET PIPES.

AREA INLETS SHALL BE MEASURED AND PAID FOR AT THE CONTRACT UNIT PRICE BID PER EACH. THIS SHALL BE CONSIDERED FULL COMPENSATION FOR ALL EXCAVATION, BACKFILLING, MATERIALS, LABOR, CONNECTION TO EXISTING STRUCTURES (IF REQUIRED), EQUIPMENT, TOOLS, AND INCIDENTALS NECESSARY TO COMPLETE THE WORK.

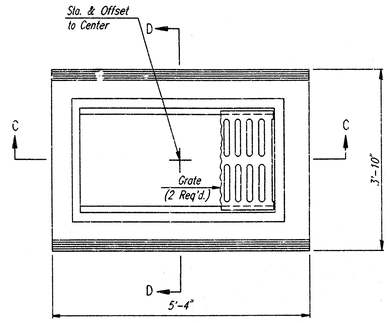

PLAN

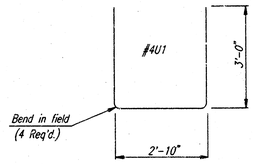

BENDING DIAGRAM

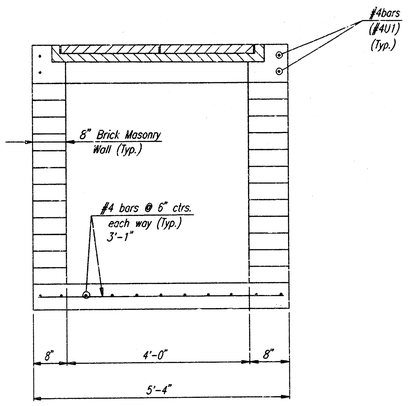

SECTION C-C

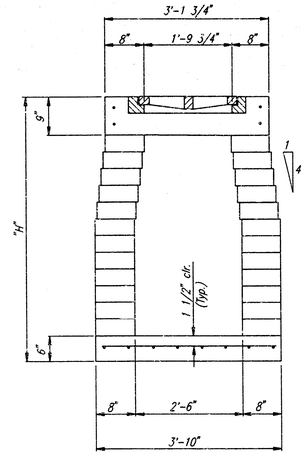

SECTION D-D

AREA INLET

BRADLEY FAIR 2ND ADDITION - NORTH SWS

AREA INLET DETAILS

C.O.W. PROJ. NO. 693PPS (607861)

PROFESSIONAL ENGINEERING CONSULTANTS, P.A.
ENGINEERS
WICHITA, KANSAS

Designed by	PDM	Checked by	
Drawn by	DEP	Date	12-8-97 No. 97098-001

DSNM: GDD OPER: DEP SCALE: 1=1.00
C:\199\97098\001\INLETDET.DWG 03-07-1997 8:59:24 am