PRIVATE

SANITARY & STORM WATER SEWER PLANS FOR

BUILDING 200 & 400, LOT 1, BLOCK 5, STONE HEDGE ADDITION

CITY OF WICHITA, KANSAS

MICHAEL E. LINDEBAK, CITY ENGINEER

INDEX CODE 607861

USER CODE 718PPS

GENERAL NOTES

1. THE CONTRACTOR SHALL BE RESPONSIBLE FOR PRESERVING PROPERTY IRONS. THE CONTRACTOR WILL BE REQUIRED TO RE-ESTABLISH ANY PROPERTY IRONS WHICH ARE DAMAGED OR DESTROYED BY HIS CONSTRUCTION OPERATIONS. SUCH IRONS SHALL BE RE-ESTABLISHED BY A LICENSED LAND SURVEYOR IN ACCORDANCE WITH STATE LAWS.

2. EXISTING UTILITES AND THEIR LOCATIONS AS SHOWN ON THE PLANS REPRESENT THE BEST INFORMATION OBTAINABLE FOR DESIGN. LOCATION INFORMATION HAS BEEN OBTAINED FROM THE VARIOUS UTILITY COMPANIES AND IS EITHER FROM COMPANY RECORD DRAWINGS OR COMPANY PROVIDED FIELD LOCATIONS. THE PLAN LOCATIONS SHOWN ARE NOT GUARANTEED. ADDITIONAL EXISTING UTILITIES MAY ALSO BE ENCOUNTERED.

3. CONTRACTOR WILL BE REQUIRED TO PROVIDE A MINIMUM ADVANCE NOTICE OF FORTY-EIGHT (48) HOURS TO UTILITY COMPANIES PRIOR TO STARTING ANY EXCAVATION AS FOLLOWS:

   KANSAS ONE-CALL 1-800-344-7233
   or 687-2470 (LOCAL WICHITA)

   THE CONTRACTOR MUST NOTIFY THE FOLLOWING IN CASE OF AN EMERGENCY:

SOUTHWESTERN BELL TELEPHONE COMPANY	1-571-2115
CABLEVISION	262-0661
KANSAS GAS & ELECTRIC (ELECTRIC)	264-1141
KANSAS GAS & ELECTRIC (GAS)	832-3180 OR 832-3169
CITY OF WICHITA SEWER MAINTENANCE	268-4908
CITY OF WICHITA WATER DEPARTMENT	268-4908

4. RUBBLE FROM THE REMOVAL OF MISCELLANEOUS STRUCTURES AND EXCESS EXCAVATION WHICH IS TO BE WASTED SHALL BE DISPOSED OF ON SITES TO BE PROVIDED BY THE CONTRACTOR. THESE SITES SHALL BE APPROVED BY THE ENGINEER AS TO SUITABILITY, APPEARANCE AND SITE LOCATION. LOCATIONS THAT, IN THE OPINION OF THE ENGINEER, WILL LEAVE AN UNSIGHTLY APPEARANCE WILL NOT BE APPROVED. ALL DIPOSAL SITES MUST BE APPROVED BY THE KANSAS DEPARTMENT OF HEALTH AND ENVIRONMENT. MATERIAL EITHER STOCKPILED OR DISPOSED OF IN A FLOOD PLAIN WOULD REQUIRE A KANSAS STATE BOARD OF AGRICULTURE PERMIT. ANY MATERIAL DUMPED IN WATERS OF THE UNITED STATES OR WETLANDS IS SUBJECT TO U.S. CORPS OF ENGINEERS PERMITTING REGULATIONS. ANY MATERIAL BURIED OR STOCKPILED BEYOND APPROVED CONSTRUCTION LIMITS WOULD REQUIRE ADDITIONAL ARCHAEOLOGICAL INVESTIGATIONS UNLESS BURIED IN A PREVIOUSLY APPROVED BORROW LOCATION.

5. TREES AND SHRUBS IN PUBLIC RIGHT-OF-WAY WHICH ARE IN DIRECT CONFLICT WITH PROPOSED NEW CONSTRUCTION SHALL BE REMOVED BY THE CONTRACTOR WITH THE ENGINEER'S APPROVAL. TREES AND SHRUBS WHICH ARE NOT IN DIRECT CONFLICT WITH PROPOSED NEW CONSTRUCTION SHALL BE SAVED AND PROTECTED FROM DAMAGE.

6. CONTRACTOR SHALL RESEED AND MULCH ALL DISTURBED AREAS. COST SHALL BE SUBSIDIARY TO SITE RESTORATION.

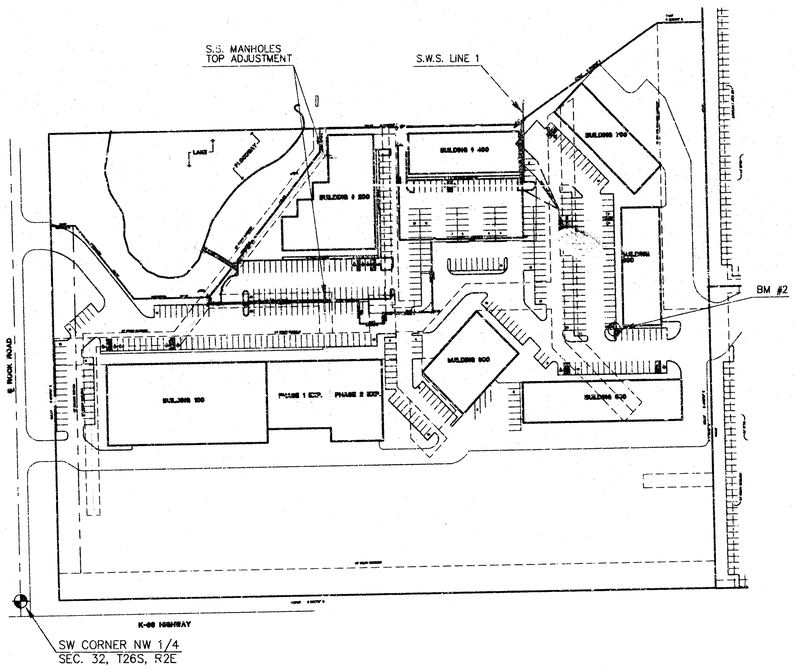

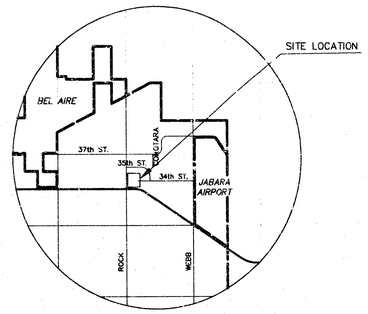

LOCATION MAP

APPROVED AS NOTED

BY CITY ENGINEER OF WICHITA

STORM WATER SEWERS VRH 5/28/97

SANITARY SEWERS VRH 5/28/97

NOTE TO CONTRACTOR

PUBLIC PROPERTY:
INSPECTION AND TESTING FOR THE SEWER LINE IS TO BE PROVIDED BY A LICENSED CONSULTING ENGINEERING FIRM UNDER CONTRACT WITH THE OWNER/DEVELOPER. SAID INSPECTION TO BE IN ACCORDANCE WITH THE CITY OF WICHITA STANDARD CONSTRUCTION ENGINEERING PRACTICES AND CERTIFIED BY A LICENSED PROFESSIONAL ENGINEER. NO WORK SHALL BE PERFORMED IN DEDICATED EASEMENTS OR THE PUBLIC RIGHT-OF-WAY BY THE CONTRACTOR WITHOUT SUCH INSPECTION NOR SHALL ANY WORK BE COMMENCED WITHOUT WRITTEN AUTHORIZATION BY THE CITY ENGINEER. ALL CONSTRUCTION AND MATERIALS SHALL COMPLY WITH THE CITY OF WICHITA SPECIFICATIONS AND STANDARDS (ON FILE AND AVAILABLE IN THE CITY ENGINEER'S OFFICE).

INDEX TO DRAWINGS

SHEET NO.	DESCRIPTION
T	TITLE SHEET
1	SITE PLAN
2	PAVING DETAILS
3	STORM WATER SEWER TYPE II CURB INLET
4	STORM WATER SEWER DROP INLET & LINE 1 PROFILE

BENCHMARKS

BM #1 SQUARE CUT ON SOUTH T.C. OF 34TH ST. CIR. IN LINE WITH THE EAST LINE OF LOT 13, COMOTARA INDUSTRIAL PARK 2ND ADD. ELEV. = 215.045

BM #2 SQUARE CUT ON T.C. AT THE S.W. CORNER OF BUILDING 600. ELEV. = 210.94

N

SCALE: 1" = 100'

LEGEND

JEFFREY T. CARPENTER LICENSED 14371 PROFESSIONAL ENGINEER 5-27-97

MID-KANSAS ENGINEERING CONSULTANTS, INC.
411 N. WEBB ROAD
WICHITA, KS. 67206
316-684-9600

NORTHROCK BUSINESS PARK BUILDING 200 & 400
PROJECT NAME

PRIVATE SANITARY & STORM WATER SEWER PLANS
SHEET TITLE

JTC	GJR	JTC
DESIGN BY:	DRAWN BY:	CHECKED BY:
MAY 1997	97077-ET.DWG	T / 4
DATE	JOB NO.	SHEET/OF

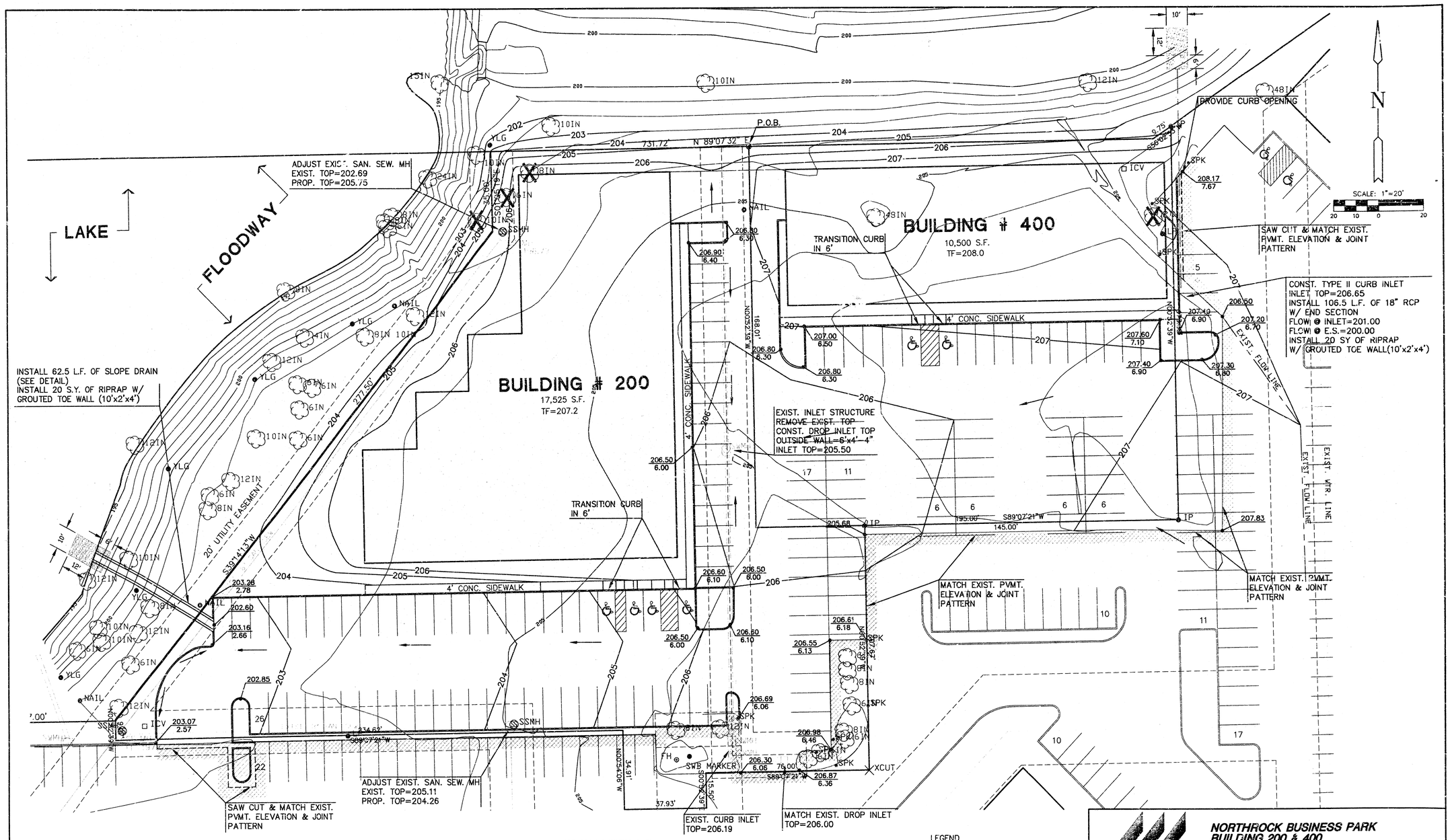
LAKE
FLOODWAY
ADJUST EXIST. SAN. SEW. MH
EXIST. TOP=202.69
PROP. TOP=205.75
INSTALL 62.5 L.F. OF SLOPE DRAIN
(SEE DETAIL)
INSTALL 20 S.Y. OF RIPRAP W/
GROUTED TOE WALL (10'x2'x4')
BUILDING # 200
17,525 S.F.
TF=207.2
BUILDING # 400
10,500 S.F.
TF=208.0
P.O.B.
N 89°07'32" E
731.72'
S89°07'21"W
544.89'
168.01'
N00°52'39"W
4' CONC. SIDEWALK
TRANSITION CURB IN 6'
EXIST. INLET STRUCTURE
REMOVE EXIST. TOP
CONST. DROP INLET TOP
OUTSIDE WALL=6'x4'-4"
INLET TOP=205.50
20' UTILITY EASEMENT
S39°14'13"W
277.50'
N01°05'19"W
35.00'
234.63'
S89°07'21"W
119.89'
N00°54'06"W
34.91'
ADJUST EXIST. SAN. SEW. MH
EXIST. TOP=205.11
PROP. TOP=204.26
SAW CUT & MATCH EXIST.
PVMT. ELEVATION & JOINT
PATTERN
EXIST. CURB INLET
TOP=206.19
MATCH EXIST. DROP INLET
TOP=206.00
PROVIDE CURB OPENING
SCALE: 1"=20'
SAW CUT & MATCH EXIST.
PVMT. ELEVATION & JOINT
PATTERN
CONST. TYPE II CURB INLET
INLET TOP=206.65
INSTALL 106.5 L.F. OF 18" RCP
W/ END SECTION
FLOW @ INLET=201.00
FLOW @ E.S.=200.00
INSTALL 20 SY OF RIPRAP
W/ GROUTED TOE WALL(10'x2'x4')
EXIST. FLOW LINE
EXIST. WTR. LINE
MATCH EXIST. PVMT.
ELEVATION & JOINT
PATTERN
MATCH EXIST. PVMT.
ELEVATION & JOINT
PATTERN
S89°07'21"W
195.00'
145.00'
N00°52'39"W
168.01'
S89°07'21"W
76.00'
N00°54'06"W
34.91'
S89°07'21"W
234.63'
S89°07'21"W
544.89'
S89°07'21"W
119.89'
N00°52'39"W
168.01'
S89°07'21"W
195.00'
S89°07'21"W
145.00'
S89°07'21"W
76.00

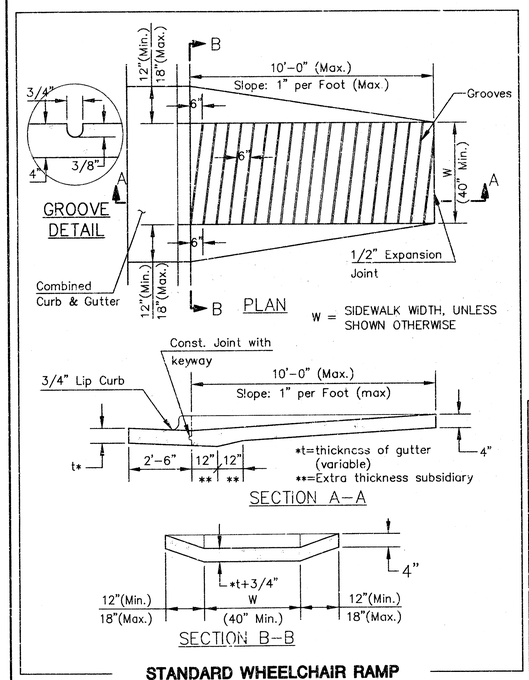

STANDARD WHEELCHAIR RAMP

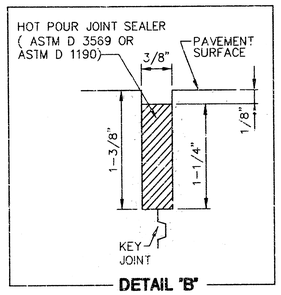

DETAIL "B"

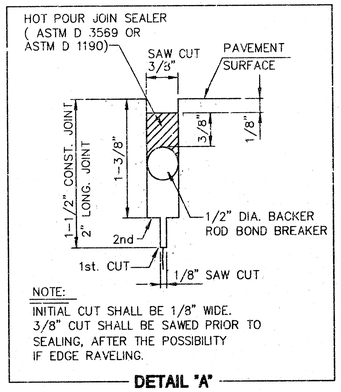

DETAIL "A"

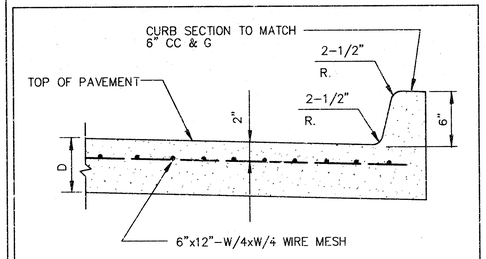

MONOLITHIC EDGE CURB

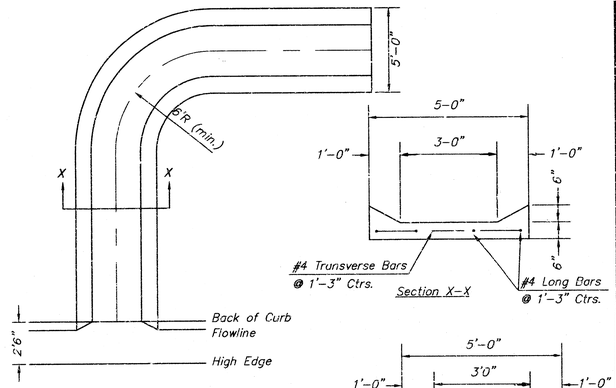

CONCRETE SLOPE DRAIN DETAILS

GENERAL NOTES

1. CONTRACTOR WILL BE REQUIRED TO PROVIDE A MINIMUM ADVANCE NOTICE OF FORTY-EIGHT (48) HOURS TO UTILITY COMPANIES PRIOR TO STARTING ANY EXCAVATION AS FOLLOWS:
   KANSAS ONE-CALL 1-800-344-7233
   OR 687-2470 (LOCAL WICHITA)

   THE CONTRACTOR MUST NOTIFY THE FOLLOWING IN CASE OF EMERGENCY:

SOUTHWESTERN BELL TELEPHONE COMPANY	1-571-2115
CABLEVISION	262-4270 OR 263-2061
KPL GAS SERVICE COMPANY	263-7511
KANSAS GAS & ELECTRIC	264-1141
CITY OF WICHITA WATER & SEWER	268-4908

2. THE CONTRACTOR SHALL GIVE ALL PROPERTY OWNERS AND/ OR TENANTS OF DEVELOPED PROPERTY ABUTTING THE PROJECT LIMITS A MINIMUM OF TEN (10) DAYS ADVANCE NOTICE PRIOR TO START OF CONSTRUCTION.
3. UTILITY SERVICE LINES, POLES, VALVE BOXES, METERS, AND ETCETERA ARE TO BE ADJUSTED AS NECESSARY BY OTHERS PRIOR TO CONSTRUCTION UNLESS THE PLANS SPECIFICALLY CALL FOR THEIR ADJUSTMENT BY THE CONTRACTOR OR UNLESS THE PLANS OR CONTRACT DOCUMENTS SPECIFICALLY IDENTIFY A UTILITY TO BE ADJUSTED BY ITS OWNER DURING CONSTRUCTION. EXISTING UTILITIES AND THEIR LOCATION, AS SHOWN ON THE PLANS, REPRESENT THE BEST INFORMATION OBTAINABLE FOR DESIGN. THE CONTRACTOR WILL BE REQUIRED TO WORK AROUND EXISTING UTILITIES WITHIN THE PROJECT WHICH DO NOT CONFLICT WITH PROPOSED CONSTRUCTION.
4. ALL ADJACENT BUILDINGS, STRUCTURES, PARKING LOTS, DRIVES, STREET PAVEMENTS, UTILITY LINES, UTILITY STRUCTURES AND APPURTENANCES OTHER THAN SHOWN FOR REPLACEMENT SHALL BE PROTECTED FROM DAMAGE DURING CONSTRUCTION OF THE PROJECT. DAMAGED ITEMS SHALL BE REMOVED AND REPLACED BY THE CONTRACTOR AT NO ADDITIONAL COST TO THE OWNER. SHEETING AND SHORING MAY BE REQUIRED TO PROTECT THE ITEMS MENTIONED ABOVE.
5. A SAW CUT OF AT LEAST ONE-HALF THE DEPTH OF EXISTING SURFACE COURSES OR ONE-FOURTH THE DEPTH OF THE EXISTING TOTAL PAVEMENT THICKNESS SHALL BE PROVIDED AT LOCATIONS WHERE PROPOSED CONSTRUCTION ABUTS AN EXISTING SURFACE COURSE OR PAVEMENT FOR WHICH PARTIAL REMOVAL OF THAT SURFACE OR PAVEMENT IS REQUIRED. SAWED JOINT TO FACILITATE REMOVAL WITHIN THREE (3) FEET OF EXISTING JOINTS WILL NOT BE PERMITTED AND FOR SUCH INSTANCES THE LIMITS OF REMOVAL SHALL EXTEND TO THE EXISTING JOINT. SUCH SAW CUTS WILL NOT BE PAID FOR DIRECTLY AND THIS COST SHALL BE CONSIDERED AS SUBSIDIARY TO THE PROJECT.
6. RUBBLE FROM THE REMOVAL OF PAVEMENT, MISCELLANEOUS STRUCTURES AND EXCESS EXCAVATION WHICH IS TO BE WASTED SHALL BE DISPOSED OF ON SITES TO BE PROVIDED BY THE CONTRACTOR. THESE SITES SHALL BE APPROVED BY THE ENGINEER AS TO SUITABILITY, APPEARANCE AND SITE LOCATION. LOCTIONS THAT, IN THE OPINION OF THE ENGINEER, WILL LEAVE AN UNSIGHTLY APPEARANCE WILL NOT BE APPROVED. ALL DISPOSAL SITES MUST BE APPROVED BY THE KANSAS DEPARTMENT OF HEALTH AND ENVIRONMENT. MATERIAL EITHER STOCKPILED OR DISPOSED OF IN A FLOOD PLAIN WOULD REQUIRE A KANSAS STATE BOARD OF AGRICULTURE PERMIT. ANY MATERIAL DUMPED IN WATERS OF THE UNITED STATES OR WETLANDS IS SUBJECT TO U.S. CORPS OF ENGINEERS PERMITTING REGULATIONS. ANY MATERIAL BURIED OR STOCKPILED BEYOND APPROVED CONSTRUCTION LIMITS WOULD REQUIRE ADDITIONAL ARCHAEOLOGICAL INVESTIGATIONS UNLESS BURIED IN A PREVIOUSLY APPROVED BORROW LOCATION.
7. PROPERTIES WITHIN THE PROJECT LIMITS MAY HAVE PRIVATE IMROVEMENTS, I.E., SPRINKLER SYSTEMS, FENCES, PLANTERS, SIGNS, ELECTRICAL LIGHTING, ETC., WHICH CONFLICT WITH NEW CONSTRUCTION. CONTRACTOR WILL BE REQUIRED TO REMOVE SUCH IMPROVEMENTS SHOULD THEY NOT BE REMOVED BY THEIR OWNER AT THE TIME OF CONSTRUCTION OF THE PROJECT. THE CONTRACTOR WILL BE REQUIRED TO SALVAGE ALL SPRINKLER HEADS, VALVES AND OTHER REUSABLE MATERIALS AND GIVE SUCH TO THEIR OWNER. IMPROVEMENTS NOT IN CONFLICT WITH WITH NEW CONSTRUCTION SHALL BE PROTECTED FROM DAMAGE AND SHALL REMAIN IN PLACE. ALL WORK IN CONNECTION WITH REMOVAL OF THESE ITEMS SHALL BE CONSIDERED AS SUBSIDIARY TO PROJECT.
8. TREES AND SHRUBS WITHIN PROJECT LIMITS WHICH ARE IN DIRECT CONFLICT WITH PROPOSED NEW CONSTRUCTION SHALL BE REMOVED BY THE CONTRACTOR WITH THE ENGINEER'S APPROVAL. TREES AND SHRUBS WHICH ARE NOT IN DIRECT CONFLICT WITH PROPOSED NEW CONSTRUCTION SHALL BE SAVED AND PROTECTED FROM DAMAGE.
9. THE CONTRACTOR SHALL BE RESPONSIBLE FOR PRESERVING PROPERTY IRONS. THE CONTRACTOR WILL BE REQUIRED TO RE-ESTABLISH ANY PROPERTY IRONS WHICH ARE DAMAGED OR DESTROYED BY HIS CONSTRUCTION OPERATIONS. SUCH IRONS SHALL BE RE-ESTABLISHED BY A REGISTERED LAND SURVEYOR IN ACCORDANCE WITH STATE LAWS.
10. ALL LIGHT POLE FOOTINGS AND/OR FOUNDATIONS LOCATED WITHIN THE CONSTRUCTION LIMITS SHALL BE REMOVED TO A MINIMUM DEPTH OF 18" BELOW THE SUBGRADE IN AREAS TO BE PAVED OR TO A MIMIMUM OF 18" BELOW THE GROUNDLINE IN AREAS TO BE SEEDED.
11. ALL ELEVATIONS SHOWN ARE CITY DATUM. CITY DATUM = USGS MSL - 1187.40
12. ALL WORK TO BE DONE ACCORDING TO CITY OF WICHITA SPECIFICATIONS.
13. JOINT SPACING SHALL NOT EXCEED 12', AND, WHERE NEW PAVEMENT ADJOINS EXISTING PAVEMENT, NEW JOINTS SHALL ALIGN WITH EXISTING JOINTS.
14. CONSTRUCTION JOINTS SHALL BE PLACED AT THE END OF A DAY'S RUN OR WHERE PAVING OPERATIONS ARE SUSPENDED FOR 45 MINUTES OR LONGER. CONSTRUCTION JOINTS SHALL BE LOCATED AT CONTRACTION JOINTS OR AT LOCATIONS SPECIFIED BY THE ENGINEER.
15. CONTRACTOR SHALL RESEED AND MULCH ALL DISTURBED AREAS. COST SHALL BE SUBSIDIARY TO PROJECT.

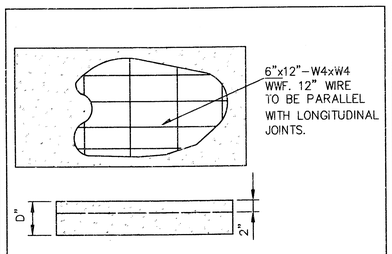

CONCRETE PAVEMENT

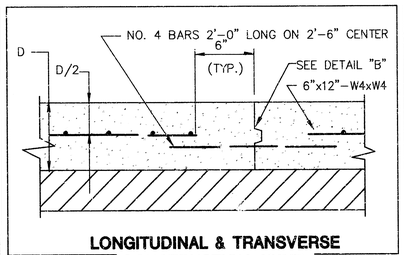

LONGITUDINAL & TRANSVERSE CONSTRUCTION JOINT

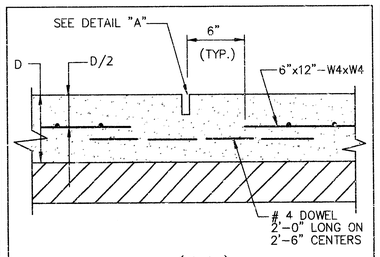

(L.J.)

SAWED LONGITUDINAL JOINT

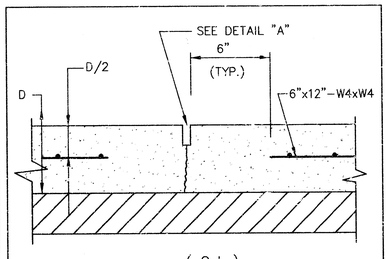

(C.J.)

SAWED CONTRACTION JOINT

MID-KANSAS ENGINEERING
CONSULTANTS, INC.
411 N. WEBB ROAD
WICHITA, KS. 67206
316-684-9600

NORTHROCK BUSINESS PARK
BUILDING 200 & 400
PROJECT NAME

PAVING DETAILS
INDEX CODE 607861, USER CODE 718PPS
SHEET TITLE

JTC	GJR	JTC
DESIGN BY:	DRAWN BY:	CHECKED BY:
MAY 1997	PAVDTL.DWG	2 / 4
DATE	JOB NO.	SHEET/OF

PLOTTED: May 27 08:45:12 1997

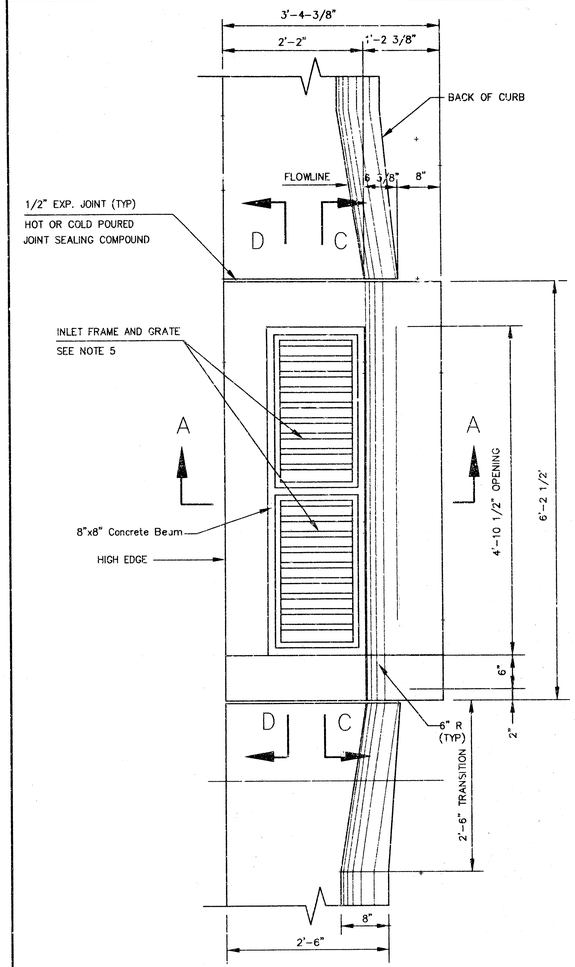

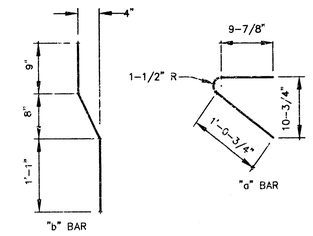

BENDING DIAGRAM

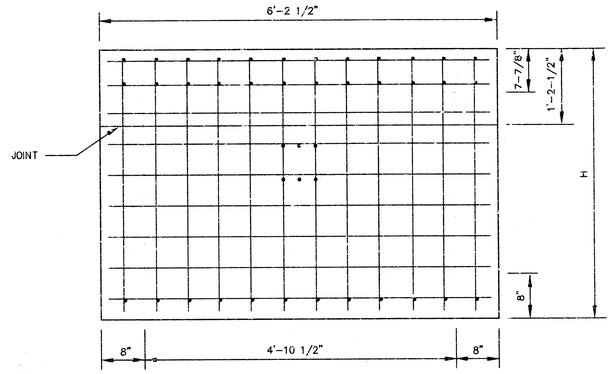

REBAR SIZES, SPACING, AND CLEARANCES PER NOTE 3.

REAR WALL

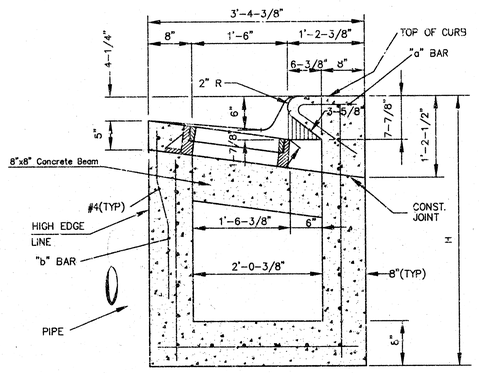

SECTION A - A

GENERAL NOTES

1. USE THE CONCRETE MIX SPECIFIED FOR THE CITY OF WICHITA CONCRETE PAVEMENT THROUGHOUT. ALL EXPOSED EDGES SHALL BE FINISHED WITH AN EDGING TOOL.
2. INLET INVERT SHALL BE SHAPED WITH 8 SACK MIX CONCRETE TO CREATE FLOW CHANNELS AND TO INCREASE HYDRAULIC EFFICIENCY SUCH THAT THE INLET WILL BE SELF CLEANING BETWEEN ALL INLET AND/OR OUTLET PIPES.
3. ALL BARS ARE #4 WITH 6" SPACING AND SHALL HAVE A MINIMUM CLEARANCE OF 1-1/2" UNLESS OTHERWISE NOTED ON THE PLANS.
4. NO DEDUCTIONS WILL BE MADE IN PAY LENGTH OF CURB, GUTTER, OR CURB AND GUTTER THROUGH THE INLET AREA.
5. USE DEETER 2441 INLET FRAMES WITH GRATES OR APPROVED EQUAL. INLET FRAMES TO BE PROOF LOAD TESTED TO 40,000 LBS. ON UNSUPPORTED SIDE.
6. REINFORCING BARS SHALL BE CUT OR BENT AROUND PIPES. NO DEDUCTION IN CONCRETE QUANTITIES SHALL BE MADE FOR PIPE OPENINGS.
7. THE VANES OF THE GRATE SHALL BE ORIENTED TO INTERCEPT FLOW FROM THE DIRECTION SHOWN BY FLOW ARROWS ON THE PLANS.

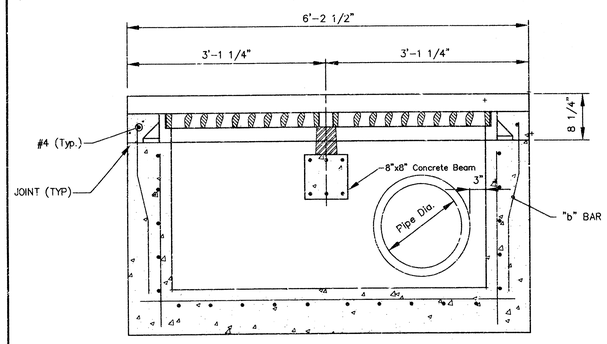

SECTION D - D

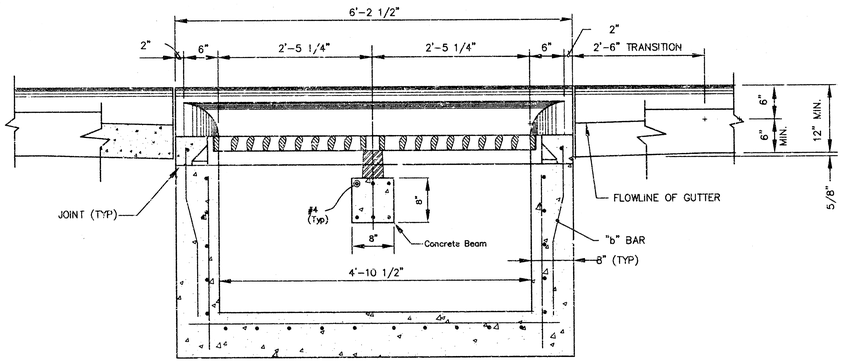

SECTION C - C

MID-KANSAS ENGINEERING CONSULTANTS, INC.
411 N. WEBB ROAD
WICHITA, KS. 67206
316-684-9600

NORTH ROCK BUSINESS PARK BUILDING 200 & 400
PROJECT NAME

TYPE II CURB INLET SWS DETAILS INDEX CODE 607861, USER CODE 718PPS
SHEET TITLE

JTC	GJR	JTC
DESIGN BY:	DRAWN BY:	CHECKED BY:
MAY 1997	SWSDTL1.DWG	3 / 4
DATE	JOB NO.	SHEET/OF

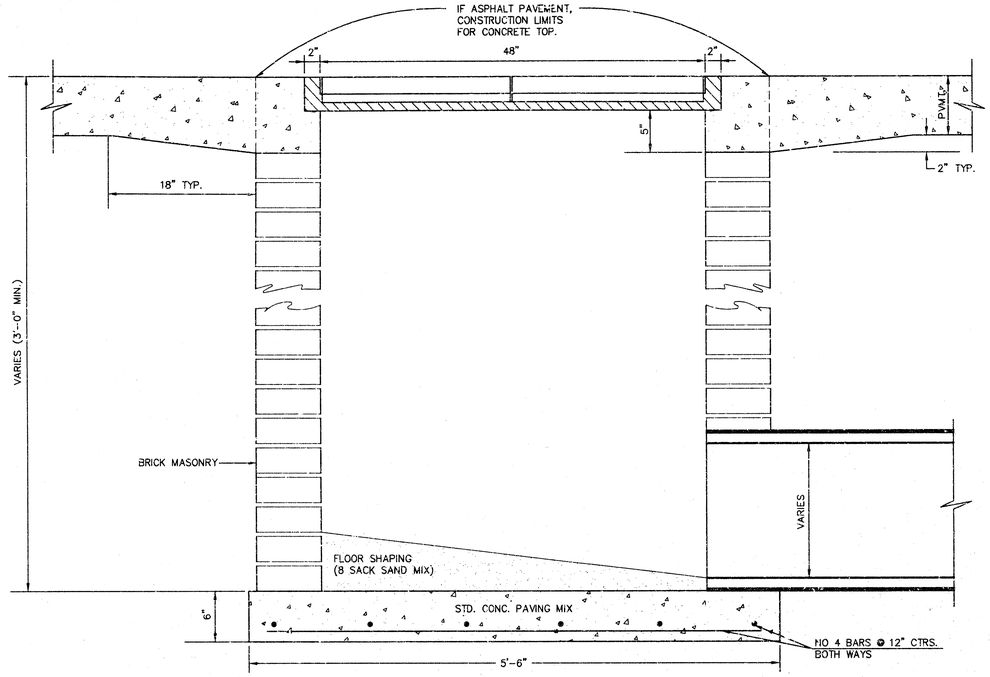

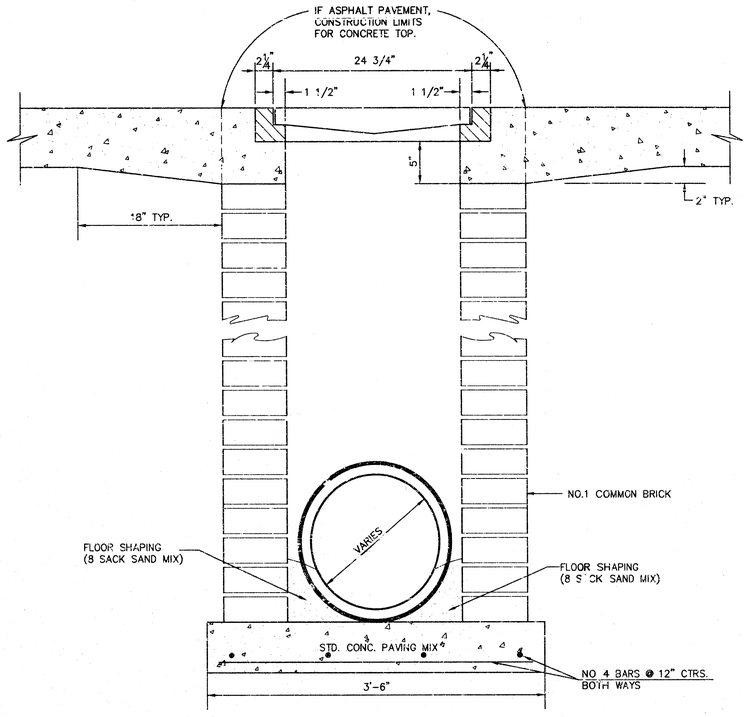

SWS PROFILE LINE 1

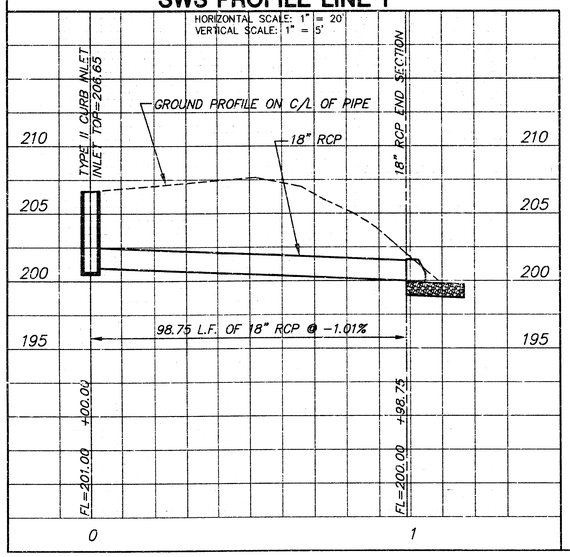

24"x24" FRAME & GRATE DETAIL

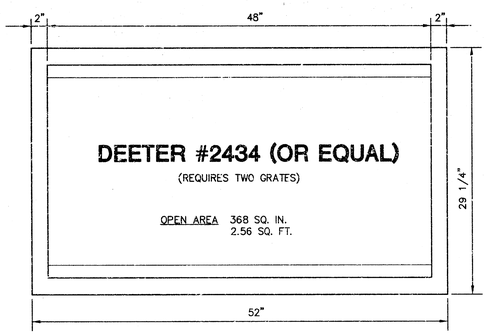

DOUBLE 24"x24" FRAME DETAIL

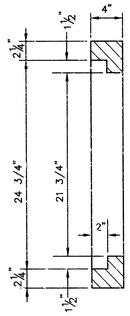

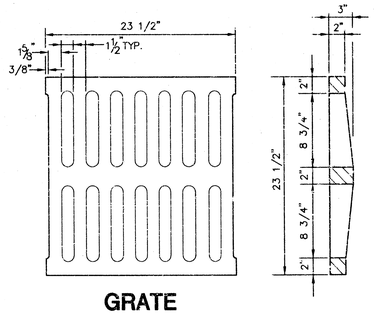

GRATE

MID-KANSAS ENGINEERING
CONSULTANTS, INC.
411 N. WEBB ROAD
WICHITA, KS. 67206
316-684-9600

NORTH ROCK BUSINESS PARK
BUILDING 200 & 400
PROJECT NAME

DROP INLET SWS DETAILS
INDEX CODE 607861, USER CODE 718PPS
SHEET TITLE

JTC	GJR	JTC
DESIGN BY:	DRAWN BY:	CHECKED BY:
MAY 1997	SWSDTL2.DWG	4 / 4
DATE	JOB NO.	SHEET NO.

18-13-1-3

F:\CIVIL\MARCH\2001-401\DWG\DTL2.dwg Tue May 27 09:49:15 1997