STORMWATER SEWER IMPROVEMENTS

to serve

Quicktrip 7th Addition

CITY OF WICHITA, KANSAS

Michael E. Lindebak, P.E. City Engineer

Private Project Number

724 PPS (607861)

724 PPS

GENERAL NOTES:

1. Contractor will be required to provide notice to utility companies a minimum of twenty-four (24) hours prior to any excavation, as follows:

   Kansas One-Call 687-2470

   The Contractor must notify the following in case of an emergency:

Cablevision	262-4270
or	263-2061
K.P L. Gas Service Company	383-8650
Kansas Gas & Electric Company	383-8600
Peoples Nat. Gas Company	942-8350
Southwestern Bell Telephone Company	1-571-2611
City of Wichita Water Department	268-4908
City of Wichita Sewer Maintenance	268-4071

2. Utility service lines, poles, valve boxes, meters, and etcetera are to be adjusted as necessary by others prior to construction unless the plans specifically call for their adjustment by the Contractor or unless the plans specifically identify a utility to be adjusted by its owner during construction. Existing utilities and their location, as shown on the plans, represent the best information obtainable for design. The contractor will be required to work around existing utilities within the right-of-way which do not conflict with proposed construction.

3. Rubble from the removal of miscellaneous structures and excess excavation which is to be wasted shall be disposed of on sites to be provided by the Contractor. These sites shall be approved by the Engineer as to suitability, appearance and site location. Locations that, in the opinion of the Engineer, will leave an unsightly appearance will not be approved. All disposal sites must be approved by the Kansas Department of Health and Environment. Material either stockpiles or disposed of in a flood plain would a Kansas State Board of Agriculture permit. Any material dumped in waters of the United States or wetlands is subject to U.S. Corps. of Engineers permitting regulations. Any material buried or stockpiled beyond approved construction limits would require additional archaeological investigations unless buried in a previously approved borrow location.

4. The contractor shall provide for continuous storm sewer flow during construction.

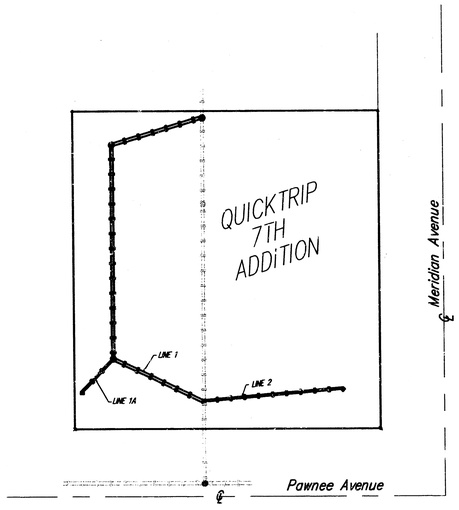

Project Area

Scale:
1" = 50'

Benchmarks

City of Wichita Disc on NW. Corner of Intersection, Traffic Signal Light BAse. 71.10' NW. of Sec. Corner Iron, 9.3' SSW. Of ℄ Of Traffic Signal Manhole, and 42.5' SW. Of ℄ of Curb Inlet.
Elevation = 102.43 City Datum

Sheet Index

Cover Sheet	1
Plan / Profile	2
Special Inlet Detail	3
Std. MH Detail	4
Shallow MH Detail	5
Copy of Plat	6

APPROVED AS NOTED
BY CITY ENGINEER OF WICHITA

Storm Sewers VRH 6/17/97

NOTE TO CONTRACTORS

Inspection and testing for this project is to be provided by a Licensed Consulting Engineering Firm under contract with the Owner/Developer. Said Inspection to be in accordance with the City of Wichita standard construction engineering practices and certified by a Licensed Professional Engineer. No work shall be performed in dedicated easements or public right-of-way by the Contractor without such inspection nor shall any work be commenced without written authorization by the City Engineer. All Construction and Materials shall comply with the City of Wichita Specifications and Standards (on file and available in the City Engineer's Office).

BOOKED
2-27-98
D-382
MCG

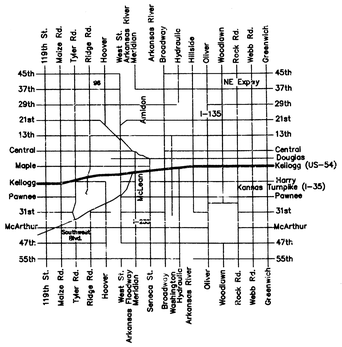

Vicinity Map

BRENT WOOTEN
LICENSED
8470
KANSAS
PROFESSIONAL ENGINEER
6/17/97.

PROJECT INSPECTED BY BAUGHMAN CO.
AS BUILT 10/20/97 DLY

BAUGHMAN COMPANY P. A.
ENGINEERING & SURVEYING
316/262-7271 • 315 ELLIS • WICHITA, KANSAS 67211

BENCHMARK:
CITY OF WICHITA BENCHMARK DISC ON NW. CORNER OF INTERSECTION, TRAFFIC SIGNAL LIGHT BASE. 71.10 NW. OF SEC. CORNER IRON, 9.3' SSW. OF ℄ OF TRAFFIC SIGNAL MANHOLE, AND 42.5' SW OF ℄ OF CURB INLET

ELEVATION = 102.43 CITY DATUM

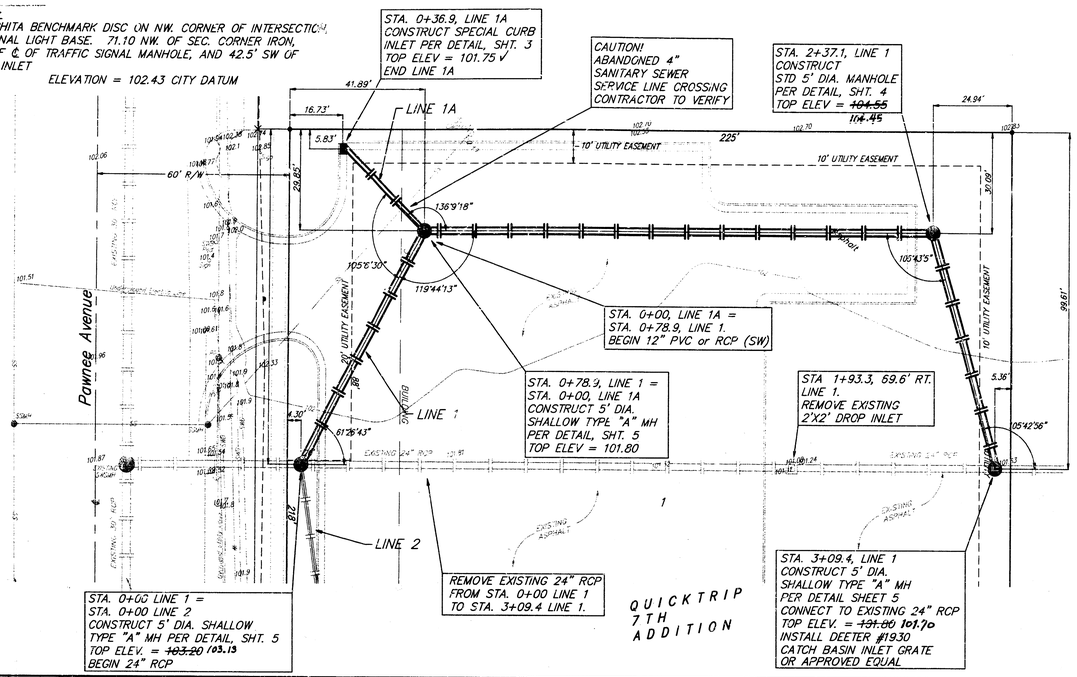

SCALE:
1 = 20' HORIZONTAL
1" = 5' VERTICAL
• = IRON

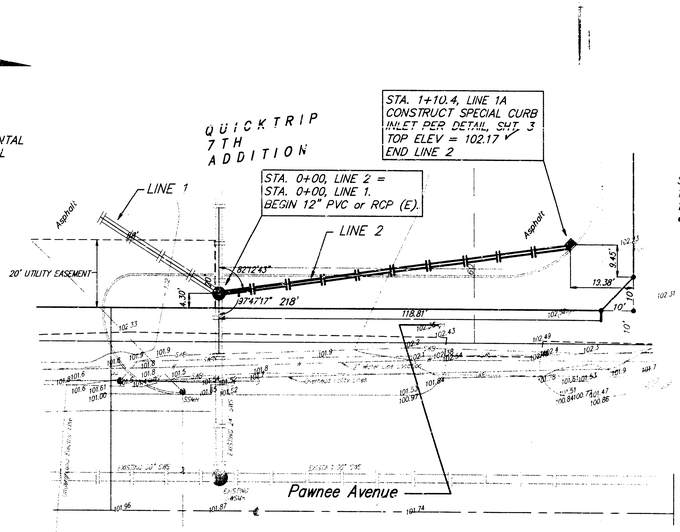

SCALE:
1 = 20' HORIZONTAL
1" = 5' VERTICAL
• = IRON

REVISED 6/16/97
REVISED 6/3/97

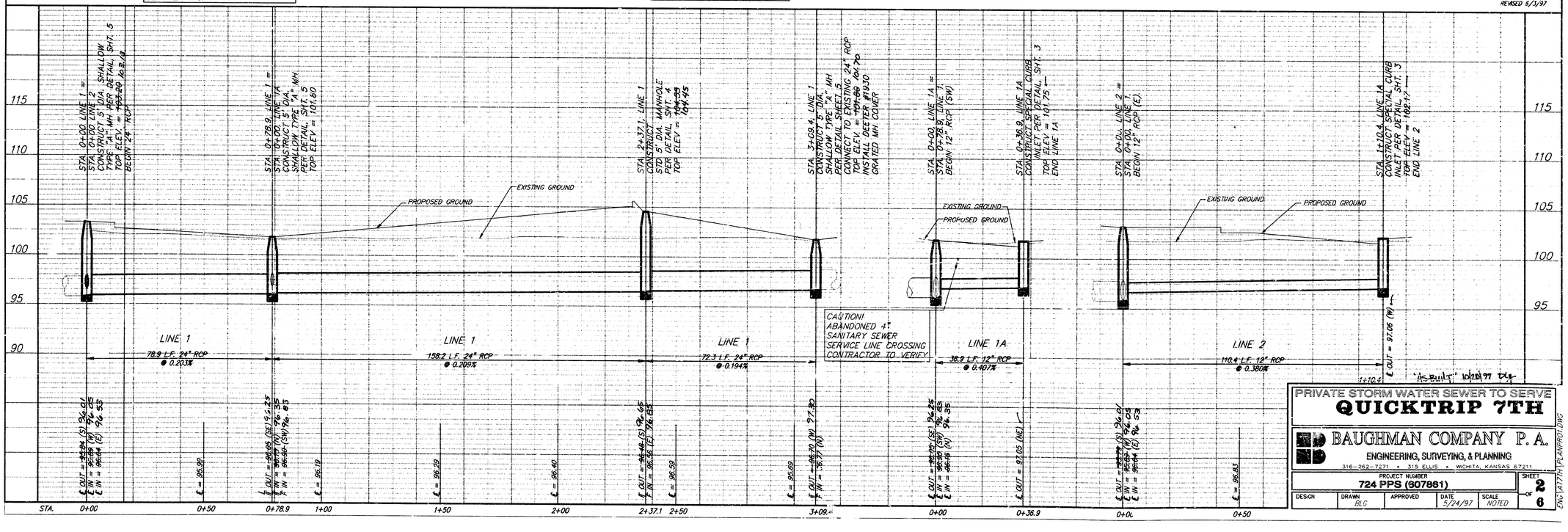

PRIVATE STORM WATER SEWER TO SERVE
QUICKTRIP 7TH

BAUGHMAN COMPANY P. A.
ENGINEERING, SURVEYING, & PLANNING
316-262-7271 • 315 ELLIS • WICHITA, KANSAS 67211

PROJECT NUMBER				SHEET
724 PPS (307861)				2 OF 6
DESIGN	DRAWN	APPROVED	DATE	SCALE
	BLC		5/24/97	NOTED

ENGINEERING PLANROT.DWG

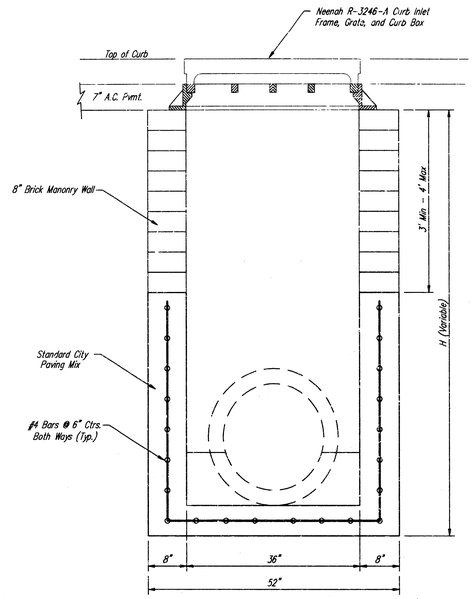

FRONT VIEW

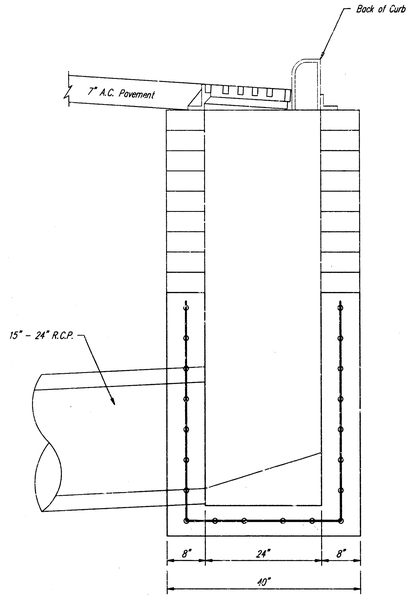

SIDE VIEW

GENERAL NOTES

Contractor shall have the option of constructing 8" brick masonry walls between the concrete inlet base and frame on this inlet when the height (H) is 7 feet or less.

The inlet invert shall be shaped with 8 sack sand mix concrete to create flow channels and to increase the hydraulic efficiency such that the inlet shall be self cleaning between all inlet and/or outlet pipes.

The end of all pipes installed in this inlet shall be cut off flush with the inside face of the inlet wall.

SPECIAL CURB INLET DETAILS FOR FULL HEIGHT CURB

BAUGHMAN COMPANY P. A.
SURVEYING & ENGINEERING
316/262-7271 • 315 ELLIS • WICHITA, KANSAS 67211

REV.

SHEET 3 OF 8

PROJECT NUMBER
724 PPS (607861)

SEWER APPURTENANCES DETAILS

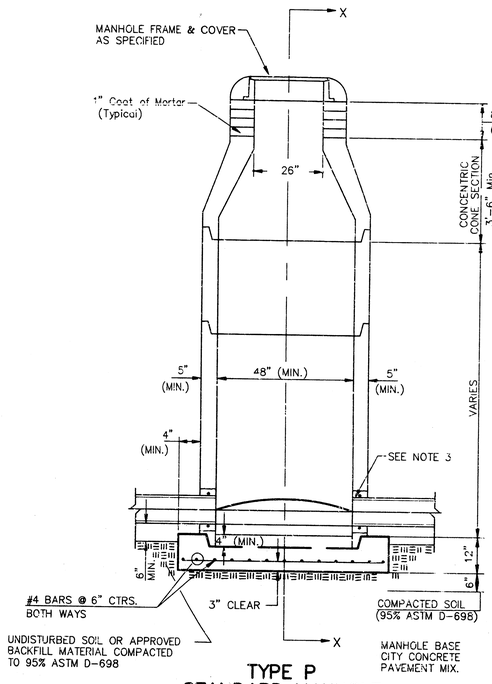

TYPE P STANDARD MANHOLE

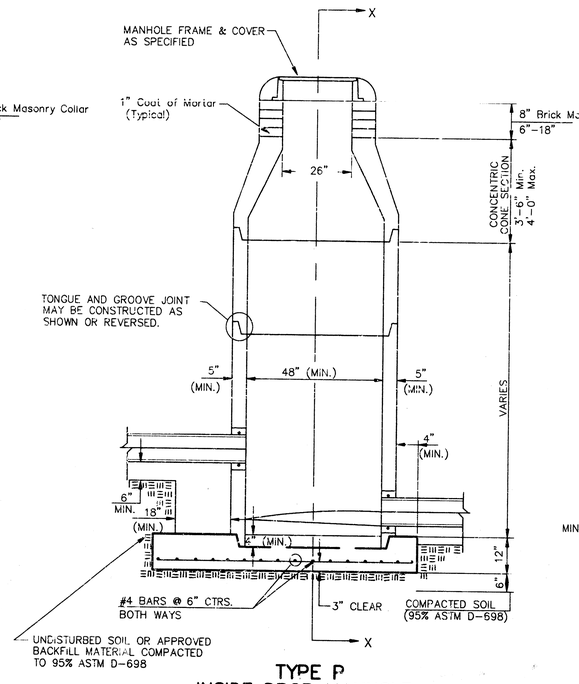

TYPE P INSIDE DROP MANHOLE

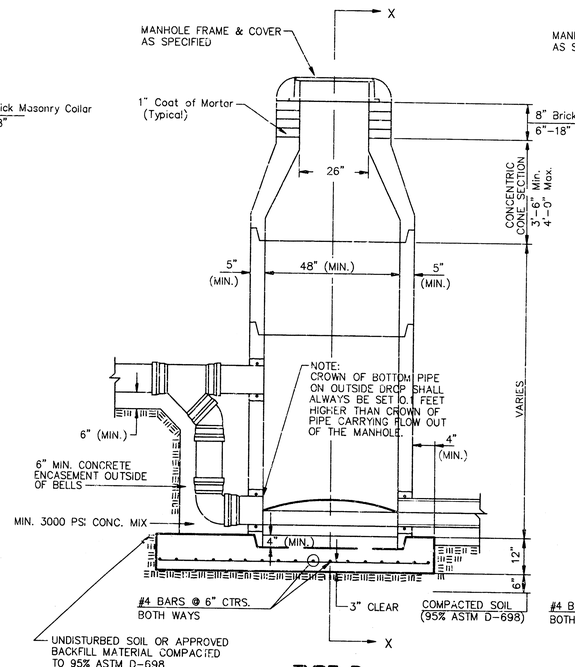

TYPE P OUTSIDE DROP MANHOLE

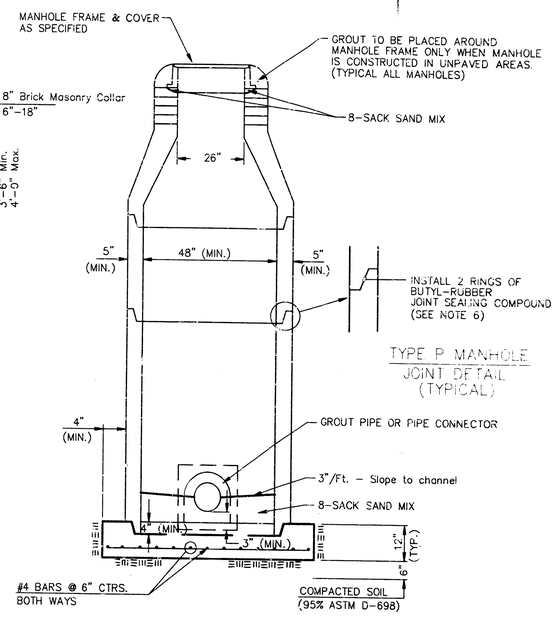

SECTION X (TYPICAL)

GENERAL NOTES

PRECAST MANHOLE NOTES

1. ALL PRECAST CONCRETE MANHOLE SECTIONS SHALL CONFORM TO THE LATEST REVISIONS OF A.S.T.M. C478 AS MODIFIED BY THE SPECIFICATIONS.
2. NON-SHRINK GROUT SHALL BE NON-METALLIC TYPE.
3. APPROVED FLEXIBLE WATERSTOP GASKETS SHALL BE INSTALLED TO JOIN THE SEWER TO THE MANHOLE WALL WHEN A.B.S. COMPOSITE PIPE OR P.V.C. PIPE IS USED. FOR OTHER TYPES OF PIPE THE SEWER SHALL BE GROUTED IN PLACE WITH NON-SHRINK GROUT. THE SEWER PIPE SHALL BE SUPPORTED WITH CONCRETE ENCASEMENT A MINIMUM OF 3 FEET FROM THE MANHOLE WALL AND TO THE FIRST JOINT FOR V.C.P. SUCH THAT THE JOINT REMAINS FLEXIBLE.
4. ALL INSIDE SURFACES OF THE CONCRETE MANHOLE WHICH WOULD BE EXPOSED TO SEWER GAS SHALL BE COATED WITH 2 COATS TNEMEC SERIES 66 HI-BUILD EPOXOLINE, DRY THICKNESS OF 8 MILS MIN.
5. EXTERIOR MANHOLE WALLS SHALL BE COATED WITH 1 COAT MOBIL A 633 BITUMINOUS COATING.
6. JOINT SEALING COMPOUND SHALL BE KENT SEAL NO. 2 OR APPROVED EQUAL.
7. PRECAST MANHOLES SHALL BE SET AT LEAST 4 INCHES INTO THE MANHOLE BASE.
8. TOP OF MANHOLE FLOOR SLAB SHALL BE AT LEAST 3 INCHES BELOW THE FLOW LINE OF THE OUTLET PIPE TO INSURE SUFFICIENT MINIMUM THICKNESS OF SHAPED INVERT.
9. LIFTING HOLES SHALL BE FILLED WITH NON-SHRINK GROUT AND THE INTERIOR SURFACE COATED AS SPECIFIED.
10. MORTAR USED IN MASONRY CONSTRUCTION SHALL CONTAIN 8 SACKS OF CEMENT PER CUBIC YARD. CONCRETE USED IN MANHOLE BASES SHALL CONFORM TO THE REQUIREMENTS OF CONCRETE FOR CONCRETE PAVEMENT CONSTRUCTION AS SPECIFIED IN THE CITY STANDARD PAVING SPECIFICATIONS USING CITY CONCRETE PAVEMENT MIX WITHOUT AIR ENTRAINING ADMIXTURE. MORTAR SHALL BE PLACED AROUND THE MANHOLE RING AS SHOWN ON THE DRAWINGS WHEN MANHOLES ARE CONSTRUCTED IN UNPAVED AREAS. MANHOLES CONSTRUCTED WHERE PIPE SIZES ARE SMALLER THAN 24" SHALL HAVE AN INSIDE DIAMETER OF 4'. MANHOLES CONSTRUCTED WHERE PIPE SIZES ARE 24" OR LARGER SHALL HAVE AN INSIDE DIAMETER OF 5'. COMPLETED MANHOLE SHALL BE WITHOUT LEAKS AND WATER TIGHT.
11. REINFORCING STEEL SHALL BE INSTALLED IN THE MANHOLE BASES AND SHALL CONSIST OF NO. 4 BARS PLACED ON 6" CENTERS IN BOTH DIRECTIONS. THE MANHOLE BASE REINFORCEMENT SHALL BE PLACED AT LEAST 3" ABOVE THE BOTTOM OF THE MANHOLE BASE. ALL COSTS FOR FURNISHING AND INSTALLING REINFORCING STEEL SHALL BE INCLUDED IN THE UNIT PRICE BID FOR THE MANHOLE.
12. OPENINGS SHALL BE CUT INTO THE MANHOLE WALL WHEN OUTSIDE DROPS ARE CONSTRUCTED ON EXISTING MANHOLES. SUCH OPENINGS CUT INTO EXISTING MANHOLES SHALL BE AS SMALL AS PRACTICAL TO FACILITATE INSTALLING AND GROUTING THE NEW PIPE IN PLACE. WATERSTOP GASKETS SHALL BE USED WITH P.V.C. AND A.B.S. COMPOSITE PIPE. THE NEW PIPE SHALL BE GROUTED INTO THE OPENING USING AN APPROVED NONSHRINK GROUT FOR THE FULL MANHOLE WALL THICKNESS. THE EXTERIOR OF THE COMPLETED CONNECTION SHALL BE SEALED WITH AN APPROVED BITUMINOUS COATING SUCH THAT THE CONNECTION WILL BE WATER TIGHT. FLOOR OF MANHOLE SHALL BE MODIFIED TO FORM NEW FLOW CHANNEL FOR THE NEW CONNECTION AS INDICATED BY THE DRAWING. THIS WORK, INCLUDING MODIFICATION OF MANHOLE FLOOR, SHALL BE PAID FOR AT THE UNIT PRICE BID FOR OUTSIDE DROP STACK CONSTRUCTED ON EXISTING MANHOLE.
13. THE FLOORS OF ALL MANHOLES SHALL BE SHAPED WITH FLOW CHANNELS SUCH THAT THE MANHOLES WILL BE SELF CLEANING AND FREE OF AREAS WHERE SOLIDS COULD BE DEPOSITED AS SEWAGE FLOWS THROUGH THE MANHOLE FROM ALL INLET PIPES TO THE OUTLET PIPE. FLOW CHANNELS SHALL BE FORMED TO MATCH THE BOTTOM HALVES OF THE INFLOWING PIPES AND THE OUTFLOWING PIPE AS SHOWN BY THE DRAWINGS EXCEPT FOR INSIDE DROP MANHOLES. FLOW CHANNELS FOR INSIDE DROP MANHOLES SHALL BE CONSTRUCTED AS INDICATED BY THE DRAWING. MANHOLE FLOORS SHALL HAVE SLOPES OF 3 INCHES PER FOOT IN THE AREAS OUTSIDE OF THE FLOW CHANNELS SLOPED TOWARD THE FLOW CHANNELS. PIPES LAID THROUGH MANHOLES SHALL HAVE THE TOP HALF REMOVED TO NEAT LINES FOR THE FULL INSIDE DIAMETER OF THE MANHOLE. MANHOLE FLOORS SHALL THEN BE SHAPED AROUND THE BOTTOM HALF OF THE PIPE WHICH FORMS THE FLOW CHANNEL.
14. PIPES INSTALLED WITHIN THE EXCAVATION MADE FOR THE MANHOLE SHALL BE CRADLED WITH CONCRETE TO THE LIMITS OF THE MANHOLE EXCAVATION. WHEN CLAY PIPE IS USED, THE CRADLE SHALL EXTEND TO THE FIRST JOINT OUTSIDE THE MANHOLE. THE CRADLE SHALL BE TERMINATED AT THE CLAY PIPE JOINT IN A MANNER WHICH WILL MAINTAIN THE FLEXIBILITY OF THE JOINT. COST OF CRADLE WITHIN MANHOLE EXCAVATION OR TO CLAY PIPE JOINTS ADJACENT TO MANHOLE SHALL BE INCLUDED IN THE UNIT PRICE BID FOR THE MANHOLE.
15. MANHOLE COVER CASTINGS AND MANHOLE FRAME CASTINGS SHALL CONFORM TO THE REQUIREMENTS AS INDICATED IN THE STANDARD SPECIFICATIONS AND AS SHOWN IN THE STANDARD DETAIL DRAWING.
16. THE VERTICAL DROP IN INSIDE DROP MANHOLES SHALL NOT EXCEED 2' FOR INFLOWING PIPES SIZED 12" OR SMALLER AND 2' FOR INFLOWING PIPES LARGER THAN 12". THE CROWNS OF INFLOWING PIPES SHALL NEVER BE SET LOWER THAN THE CROWN OF THE OUTFLOWING PIPE.
17. STANDARD MANHOLES AND STANDARD INSIDE DROP MANHOLES SHALL BE BID AS STANDARD MANHOLES FOR THE TYPE AND DIAMETER INDICATED. OUTSIDE DROP MANHOLES SHALL BE BID AS STANDARD OUTSIDE DROP MANHOLES FOR THE TYPE AND DIAMETER INDICATED. ALL MANHOLE DIAMETERS WILL BE 4' UNLESS INDICATED OTHERWISE.
18. A BRICK MASONRY COLLAR SHALL BE INSTALLED BETWEEN THE CAST IRON FRAME AND THE CONCENTRIC CONE. THE COLLAR WILL HAVE 8" WALLS AND A VERTICAL HEIGHT OF 6" MINIMUM AND 18" MAXIMUM. A 1" COAT OF MORTAR WILL BE PLASTERED ON THE OUTSIDE OF THE COLLAR. THE USE OF PRE-CAST CONCRETE SPACERS FOR MANHOLE TOP ADJUSTMENT IS ALSO ALLOWED.

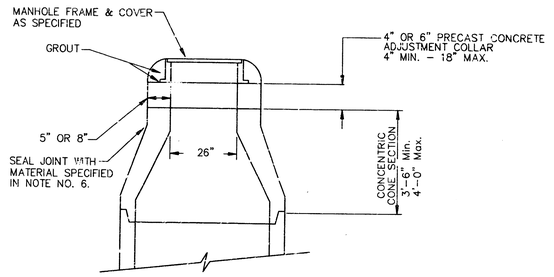

ALTERNATE CONSTRUCTION IN UNPAVED AREAS

CITY OF WICHITA

STD. MANHOLE DETAILS

& SEWER APPURTENANCES DETAILS

BAUGHMAN COMPANY P.A.

ENGINEERING, SURVEYING, & PLANNING

316-262-7271 • 315 ELLIS • WICHITA, KANSAS 67211

PROJECT NUMBER	SHEET
724 PPS(607861)	4

DESIGN	DRAWN	APPROVED	DATE	SCALE	OF 6

DETAILS.DWH

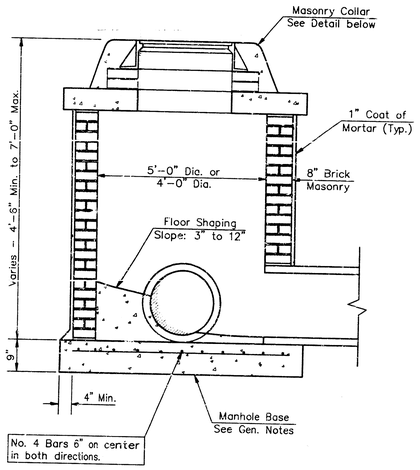

SHALLOW TYPE "A" MANHOLE

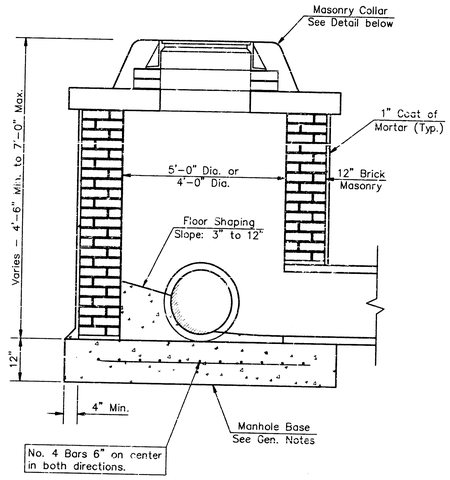

SHALLOW TYPE "B" MANHOLE

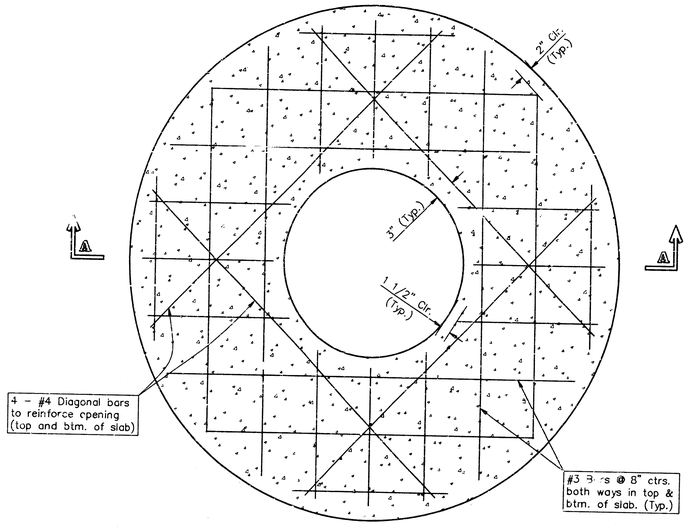

PLAN

GENERAL NOTES

1. Mortar used in masonry construction shall contain 8 sacks of cement per cubic yard. Concrete used in manhole bases shall conform to the requirements of concrete for concrete pavement construction as specified in the city standard paving specifications using city concrete cement mix without air entraining admixture. Mortar shall be placed around the manhole ring as shown on the drawings when manholes are constructed in unpaved areas. Type "A" shallow manholes can be used on sewers when the manhole is not located within public street pavement. Manholes constructed where pipe sizes are smaller than 24" shall have an inside diameter of 4'. Manholes constructed where pipe sizes are 24" or larger shall have an inside diameter of 5'. Completed manhole shall be without leaks and water tight.

2. Reinforcing steel shall be installed in the manhole bases and shall consist of no. 4 bars placed on 6" centers in both directions. The manhole base reinforcement shall be placed 6" above the bottom of the manhole base. All costs for furnishing and installing reinforcing steel shall be included in the unit price bid for the manhole.

3. The floors of all manholes shall be shaped with flow channels such that the manholes will be self cleaning and free of areas where solids could be deposited as sewage flows through the manhole from all inlet pipes to the outlet pipe. Flow channels shall be formed to match the bottom halves of the inflowing pipes and the outflowing pipe as shown by the drawings. Manhole floors shall have slopes of 3 inches per foot in the areas outside of the flow channels sloped toward the flow channels. Pipes laid through manholes shall have the top half removed to neat lines for the full inside diameter of the manhole. Manhole floors shall then be shaped around the bottom half of the pipe which forms the flow channel.

4. Pipes installed within the excavation made for the manhole shall be cradled with concrete to the limits of the manhole excavation. When clay pipe is used, the cradle shall extend to the first joint outside the manhole. The cradle shall be terminated at the clay pipe joint in a manner which will maintain the flexibility of the joint. Cost of cradle within manhole excavation or to clay pipe joints adjacent to manhole shall be included in the unit price bid for the manhole.

5. Manhole cover castings and manhole frame castings shall conform to the requirements as indicated in the standard specifications and as shown in the standard detail drawings.

6. The crowns of inflowing pipes shall never be set lower than the crown of the outflowing pipe.

7. Standard shallow manholes type "A" and "B" shall be paid for at the unit price bid per each for the type and diameter indicated. Standard special shallow manholes type "A" and "B" shall be paid for at the unit price bid per each for the type indicated. All standard shallow manhole diameters will be 4' unless indicated otherwise.

8. All brick used in manhole construction shall meet Grade SW of ASTM C652 or C62-87.

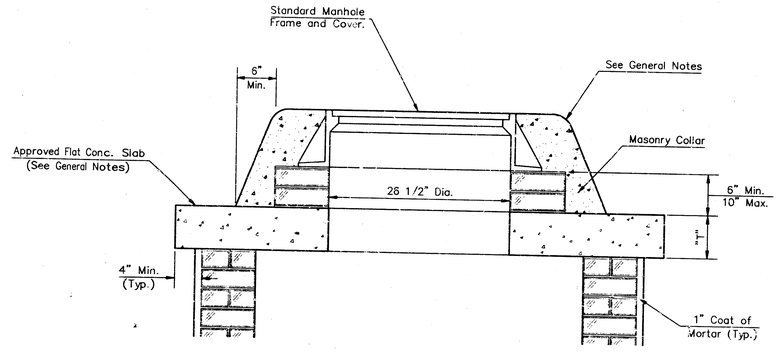

MASONRY COLLAR DETAIL

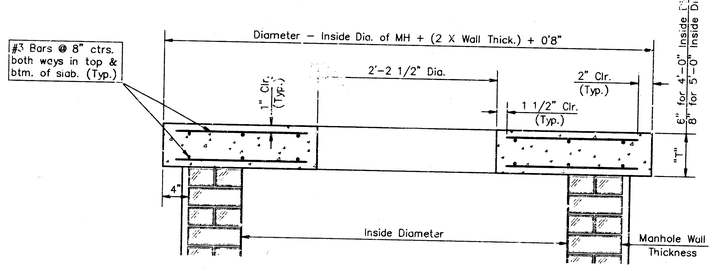

SECTION A-A

FLAT CONCRETE SLAB DETAILS

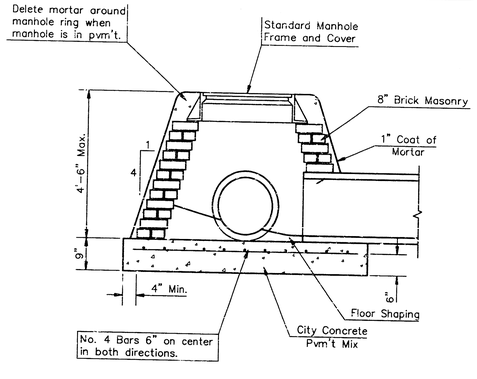

SPECIAL SHALLOW TYPE "A" MANHOLE

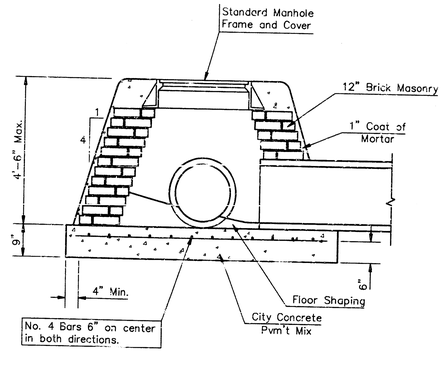

SPECIAL SHALLOW TYPE "B" MANHOLE

CITY OF WICHITA, KANSAS

STD. SHALLOW MANHOLES

TYPE "A" AND TYPE "B"

BAUGHMAN COMPANY P.A.
ENGINEERING, SURVEYING, & PLANNING
316-262-7271 • 315 ELLIS • WICHITA, KANSAS 67211

PROJECT NUMBER					SHEET
724 PPS(607861)					5 OF 6
DESIGN	DRAWN	APPROVED	DATE	SCALE	
C.O.W.	Staff				

QUIKTRIP 7TH ADDITION
WICHITA, SEDGWICK COUNTY, KANSAS

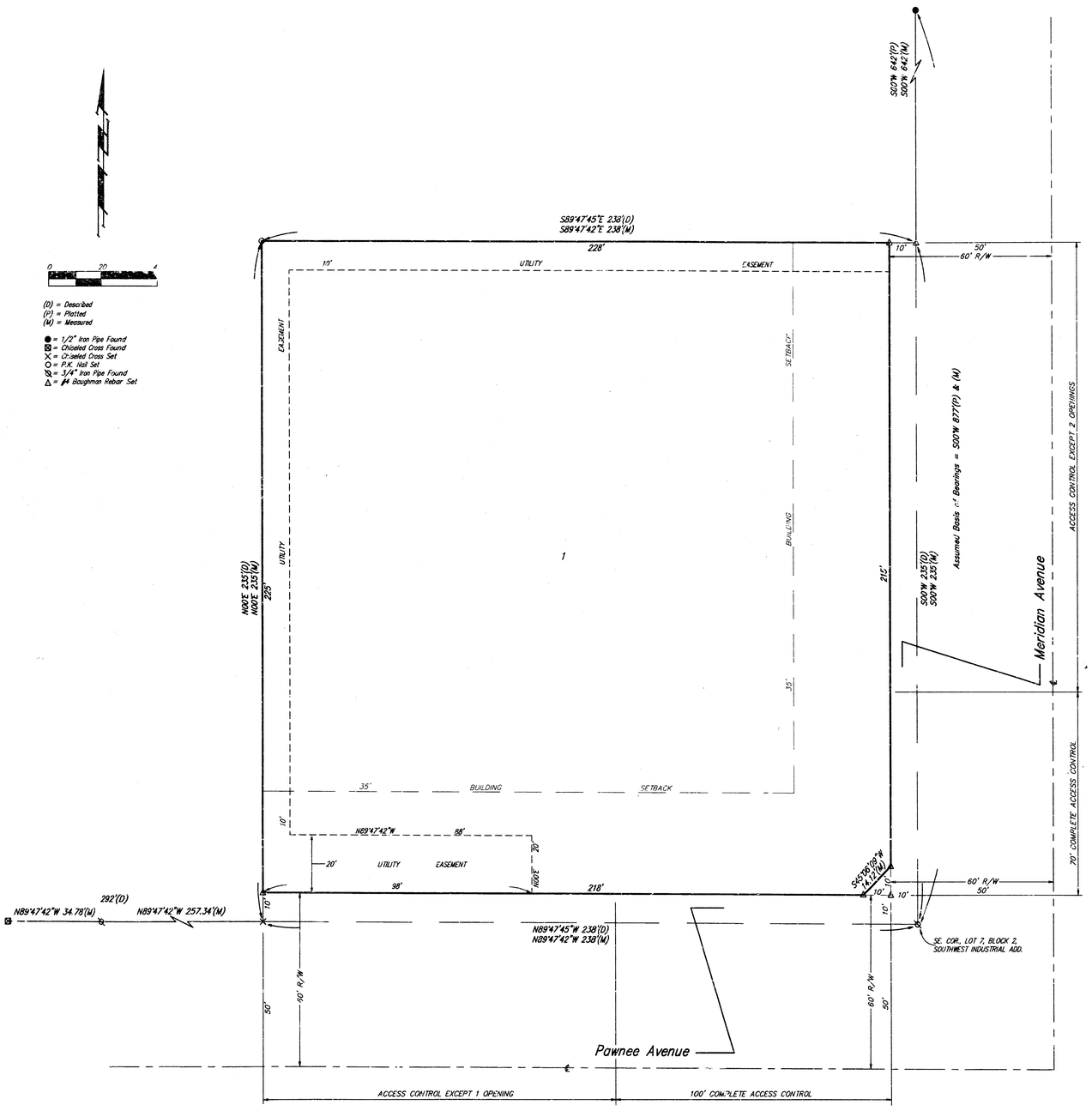

State of Kansas)
Sedgwick County) SS We, Baughman Company, P.A., Surveyors in aforesaid County and State do hereby certify that we have surveyed and platted "QUIKTRIP 7TH ADDITION", Wichita, Sedgwick County, Kansas, and that the accompanying plat is a true and correct exhibit of the property surveyed, described as follows: The east 238 feet of Lot 7, together with the south 35 feet of the east 238 feet of Lot 8, Block 2, Southwest Industrial Addition, Wichita, Kansas.

All being situated in the SE1/4 of Sec. 36, Twp. 27-S, R-1-W of the 6th P.M., Seagwick County, Kansas.

Existing public easements and dedications being vacated by virtue of K.S.A. 12-512(b).

Baughman Co., P.A.

_____ Surveyor
Gregory F. Severns

Know all men by these presents that we, the undersigned, have caused the land in the surveyors certificate to be platted into a Lot and Streets to be known as "QUIKTRIP 7TH ADDITION", Wichita, Sedgwick County, Kansas. The utility easements are hereby granted as indicated for the construction and maintenance of all public utilities. The streets are hereby dedicated to and for the use of the public. All abutters rights of access to or from Meridian Avenue over and across the east line of Lot 1 are hereby granted to the City of Wichita, Kansas provided, however, that Lot 1 shall have access to Meridian Avenue at two locations over all except the south 70 feet thereof, as shall be determined by the City Engineer of the City of Wichita, Kansas. All abutters rights of access to or from Pawnee Avenue over and across the south line of Lot 1 are hereby granted to the City of Wichita, Kansas provided, however, that Lot 1 shall have access to Pawnee Avenue at one location over all except the east 100 feet thereof, as shall be determined by the City Engineer of the City of Wichita, Kansas.

Builders, Inc.

_____, President
James Nungesser

State of Kansas)
Sedgwick County) SS The foregoing instrument acknowledged before me, this ____ day of _____, 1996, by James Nungesser, President of Builders, Inc., on behalf of the corporation.

_____ Notary Public

My App't. Exp. _____

This plat of "QUIKTRIP 7TH ADDITION", Sedgwick Wichita, Sedgwick County, Kansas has been submitted to and approved by the Wichita-Sedgwick County Metropolitan Area Planning Commission, Wichita, Kansas.

Dated this ____ day of _____, 192__.

Wichita-Sedgwick County Metropolitan Area Planning Commission

_____ Chair
Susan Osborne-Howes

_____ Secretary
Marvin S. Krout

This plat approved and all dedications shown hereon accepted by the City Council of the City of Wichita, Kansas, this ____ day of _____, 1996.

_____ Mayor
Bob Knight

_____ City Clerk
Pat Burnett

Entered on transfer record this ____ day of _____, 1996.

_____ County Clerk
Susan E. Crockett-Spoon

State of Kansas)
Sedgwick County) SS This is to certify that this plat has been filed for record in the office of the Register of Deeds, this ____ day of _____, 1996, at ____ o'clock __M; and is duly recorded.

_____ Register of Deeds
Pat Kettler

_____ Deputy
Ed Resa

12-1-96