PRIVATE STORM SEWER TO SERVE LOT 1, BLOCK 1

BRADLEY FAIR 3RD ADDITION

PRIVATE STORM SEWER # 738 PPS (607861)

GENERAL NOTES

1. All work on this project shall conform to the Standard Specifications for Storm Sewer Construction of the City of Wichita.
2. Locating dimensions are to center of new inlet.
3. All areas within public right-of-way which may be disturbed by Contractor's operations shall be restored in accordance with City of Wichita Administrative Regulation AR-78.
4. The Contractor shall notify Kansas One-Call (687-2470) a minimum of 24 hours prior to any excavation.
5. Any roof drain connection to this storm sewer will require a permit from the City of Wichita.

INDEX OF SHEETS

1. TITLE SHEET
2. STORM SEWER PLAN & PROFILE
3. STANDARD TYPE 1 CURB INLET



SRB

Scale 1" = 100'

BENCH MARK:

CITY OF WICHITA DISK AT NE CORNER OF INTERSECTION OF 21ST AND ROCK ROAD IN TURN ISLAND 45' NORTH AND 48' EAST OF CENTERLINE OF BOTH.

ELEV. 214.568

BOOKED
4-30-98
M&S
D-387

APPROVED AS NOTED
BY CITY ENGINEER OF WICHITA

Sanitary Sewers _____

Storm Sewers VRH 10/22/97

Driveway Approaches _____

Water Mains _____

Paving _____

NOTE TO CONTRACTORS

Inspection and testing for this project are to be provided by a Licensed Consulting Engineering Firm under contract with the Owner/Developer. Said Inspection to be in accordance with the City of Wichita standard construction engineering practices and certified by a Licensed Professional Engineer. No work shall be performed in dedicated easements or public right-of-way by the Contractor without such inspection, nor shall any work be commenced without written authorization by the City Engineer.

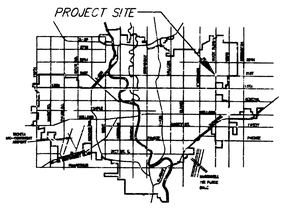

VICINITY MAP

SRB

A

By Rational Formula:			Q=CIA
Impervious Area			13303 S.F.
Pervious Area			0 S.F.
D.A. (to storm sewer)			0.31 Acres
$C_{IMPERVIOUS}$			0.95
$C_{PERVIOUS}$			0.00
$C_{MEDIATED}$			0.00
Assumed time of concentration			5 min.
I_5	6.53 in./hr.	I_{100}	10.32 in./hr.
Q_5	1.9 cfs	Q_{100}	3.0 cfs

B

By Rational Formula:			Q=CIA
Impervious Area			14597 S.F.
Pervious Area			0 S.F.
D.A. (to storm sewer)			0.34 Acres
$C_{IMPERVIOUS}$			0.95
$C_{PERVIOUS}$			0.00
$C_{MEDIATED}$			0.00
Assumed time of concentration			5 min.
I_5	6.53 in./hr.	I_{100}	10.32 in./hr.
Q_5	2.1 cfs	Q_{100}	3.3 cfs
Cumulative			
Q_5	4.1 cfs	Q_{100}	6.3 cfs

C

By Rational Formula:			Q=CIA
Impervious Area			24363 S.F.
Pervious Area			0 S.F.
D.A. (to storm sewer)			0.56 Acres
$C_{IMPERVIOUS}$			0.95
$C_{PERVIOUS}$			0.00
$C_{MEDIATED}$			0.00
Assumed time of concentration			5 min.
I_5	6.53 in./hr.	I_{100}	10.32 in./hr.
Q_5	3.5 cfs	Q_{100}	5.5 cfs
Total			
Q_5	7.6 cfs	Q_{100}	11.8 cfs

RUNOFF CALCULATIONS:

REVISED "AS BUILT" 12-4-97 TCB

SRB
924 NORTH MAIN
WICHITA, KANSAS 67203
316-264-8008
FAX 264-4621
SAVOY, RUGGLES & BOHM, P. A.
ENGINEERING & SURVEYING

847D

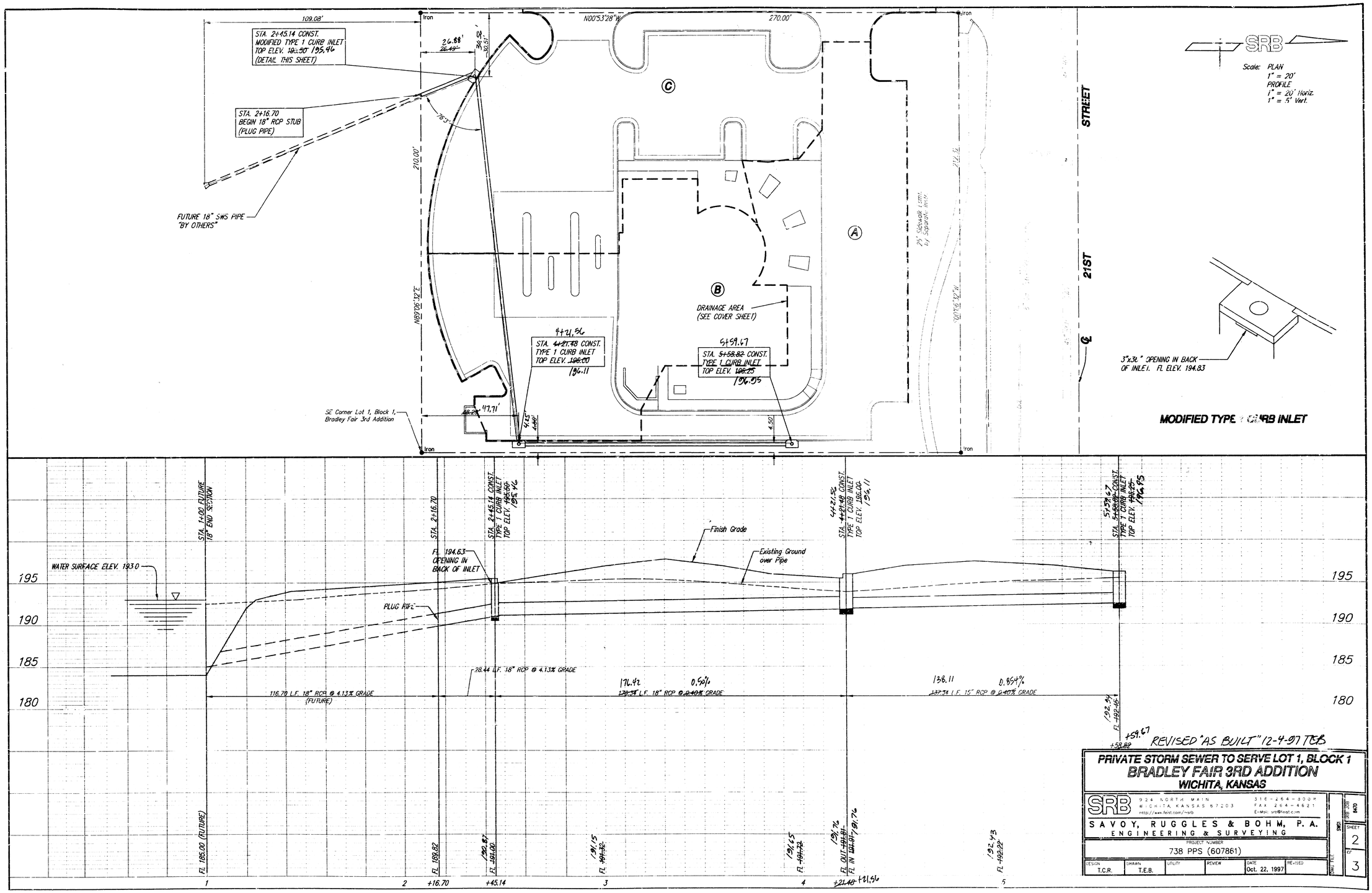

PRIVATE STORM SEWER TO SERVE LOT 1, BLOCK 1
BRADLEY FAIR 3RD ADDITION
WICHITA, KANSAS

SRB
924 NORTH MAIN
WICHITA, KANSAS 67203
http://www.feist.com/~srb
316-264-8009
FAX 264-4621
E-Mail: srb@feist.com
SAVOY, RUGGLES & BOHM, P.A.
ENGINEERING & SURVEYING

PROJECT NUMBER
738 PPS (607861)

DESIGN	DRAWN	UTILITY	REVIEW	DATE	REVISED
T.C.R.	T.E.B.			Oct. 22, 1997	

SHEET 2 OF 3
SWD 738 PPS 608
DWG FILE

F:\Active Projects\Tom Brooks\BF7D\SWS Bradley Fair Bank of Hutch\SWS1 Wed Oct 22 14:09:29 1997 TEB

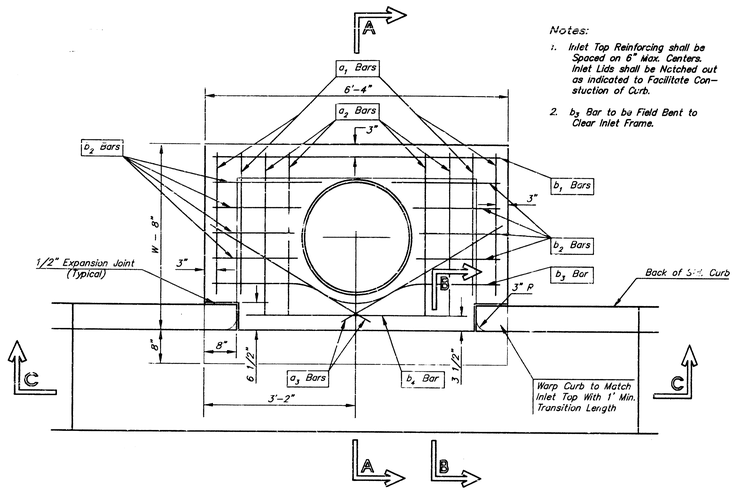

PLAN

Notes:

1. Inlet Top Reinforcing shall be Spaced on 6" Max. Centers. Inlet Lids shall be Notched out as indicated to Facilitate Construction of Curb.
2. b_3 Bar to be Field Bent to Clear Inlet Frame.

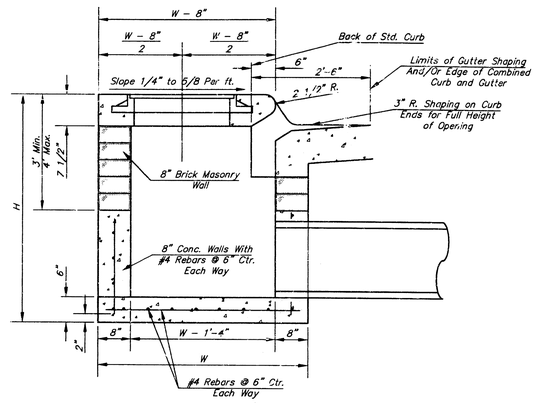

SECTION A–A

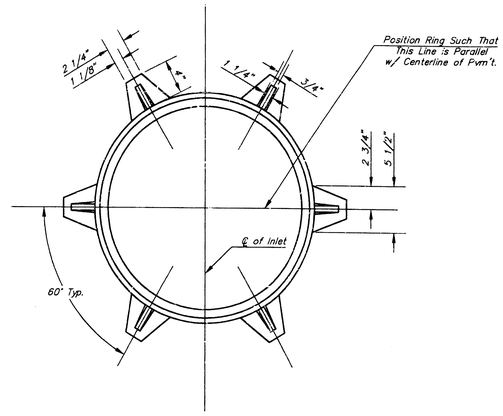

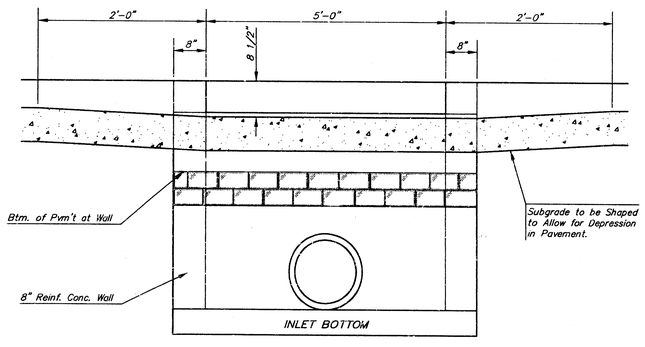

SECTION C–C

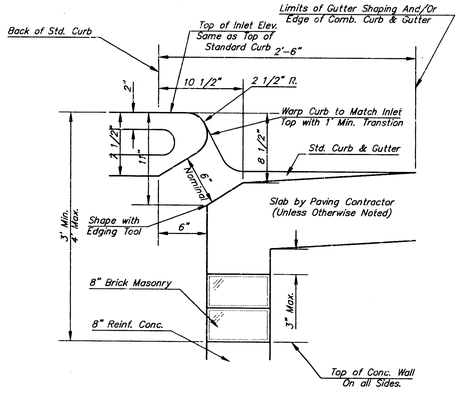

SECTION B–B

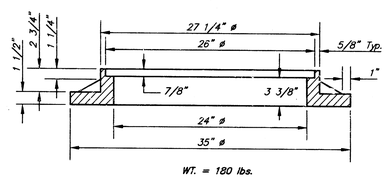

WT. = 180 lbs.

MANHOLE RING AND COVER

*See City of Wichita Standard Manhole Ring and Cover Detail Sheet for Cover Details to Be Used With Inlet Frame.

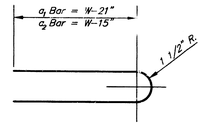

BENDING DIAGRAM

STEEL SCHEDULE

BAR		a_1	a_2	a_3	b_1 W=4'-4"	b_1 W=5'-4"	b_1 W=6'-4"	b_1 W=7'-4"	b_1 W=8'-4"	b_2	b_3	b_4	Wt. Lbs.
NUMBER		4	4	2	1	3	5	7	9	6	1	1	
SIZE		#4	#4	#4	#4	#4	#4	#4	#4	#4	#4	#6	
LENGTH	W=4'-4"	5'-7"	6'-7"	4'-0"	6'-1"	–	–	–	–	1'-9"	6'-2"	4'-8"	60±
	W=5'-4"	7'-7"	8'-7"	5'-0"	–	6'-1"	–	–	–	1'-9"	6'-2"	4'-8"	81±
	W=6'-4"	9'-7"	10'-7"	6'-0"	–	–	6'-1"	–	–	1'-9"	6'-2"	4'-8"	101±
	W=7'-4"	11'-7"	12'-7"	7'-0"	–	–	–	6'-1"	–	1'-9"	6'-2"	4'-8"	121±
	W=8'-4"	13'-7"	14'-7"	8'-0"	–	–	–	–	6'-1"	1'-9"	6'-2"	4'-8"	141±

Note: a_3 Bars to be Placed Approx. 2" Below Top of Inlet Cover.

STANDARD CURB INLET PRECAST TOPS

W	PRE-CAST TOP SIZE	PIPE SIZE	CU. YD. CONC.
4'-4"	3'-8" 6'-4" 7 1/2"	21" & SMALLER	0.38±
5'-4"	4'-8" 6'-4" 7 1/2"	24" & 30"	0.51±
6'-4"	5'-8" 6'-4" 7 1/2"	36" & 42"	0.64±
7'-4"	6'-8" 6'-4" 7 1/2"	48" & 54"	0.77±
8'-4"	7'-8" 6'-4" 7 1/2"	60" & 66"	0.90±

GENERAL NOTES

1. Concrete tops to be installed on thin mortar cushion to insure full support along brick walls. Concrete tops may be cast in place or precast. Concrete used for inlet construction shall be concrete pavement mix.
2. Contractor shall have the option of constructing 8" brick masonry walls between the concrete inlet base and top on this inlet when W=6'-4" and H=7'-0" or less.
3. Inlet invert shall be shaped with 8 sack sand mix concrete to create flow channels and to increase hydraulic efficiency such that the inlet will be self cleaning between all inlet and/or outlet pipes.
4. The ends of all pipes installed in inlets shall be cut off flush with the inside face of the inlet wall.

THE CITY OF WICHITA

CITY ENGINEER'S OFFICE
CITY HALL - SEVENTH FLOOR
455 NORTH MAIN STREET
WICHITA, KANSAS 67202
(316) 268-4501
(316) 268-4114 FAX

STANDARD TYPE 1 CURB INLET OPENING = 6'x5'-0"

M. E. LINDEBAK P.E. – CITY ENGINEER

PROJECT NUMBER	INDEX CODE
738 PPS	(607861)
DATE MAR 96	SHEET 3 OF 3

1134-13

F:\Active Projects\Tom Shooks\BA70(DSK) Bradley Fair Bank of Hutch)\X(COM)Type 1 Inlet(Single) Wed Oct 22 14:11:49 1997 TEB

30 of 50 ar