STORM WATER SEWER IMPROVEMENTS TO SERVE

CHAUCER ESTATES

LOT 1, REGENCY LAKES SECOND

Private Project Number

742PPS (607861)

CITY OF WICHITA, KANSAS

Michael E. Lindebak, P.E. City Engineer

GENERAL NOTES:

1. Contractor will be required to provide notice to utility companies a minimum of twenty-four (24) hours prior to any excavation, as follows:

   Kansas One-Call 687-2470

   The Contractor must notify the following in case of an emergency:

Cablevision	262-4270
or	263-2061
K.P.L. Gas Service Company	263-7511
Kansas Gas & Electric Company	264-1141
Arkla Gas Company	942-8350
or	263-8161
Southwestern Bell Telephone Company	1-571-2611
City of Wichita Water Department	268-4908
City of Wichita Sewer Maintenance	268-4071

2. Underground utility service lines and overhead utility pole lines are to be adjusted as necessary by others prior to construction unless the plans specifically call for their adjustment by the Contractor or unless the plans specifically identify a utility to be adjusted by its owner during construction. Existing utilities and their location, as shown on the plans, represent the best information obtainable for design. The Contractor will be required to work around existing utilities within the right-of-way which do not conflict with proposed construction.

3. The Contractor shall be responsible for preserving property irons. The Contractor will be required to re-establish any property irons which are damaged or destroyed by his construction operations. Such irons shall be re-established by a licensed land surveyor in accordance with state laws.

4. All areas disturbed by construction operations shall by seeded with rye grass at a rate of 300 lbs/acre immediately following construction in that area. Ground shall be prepared per City of Wichita specifications prior to seeding.

5. Trees and shrubs in public right-of-way which are in direct conflict with proposed new construction shall be removed by the Contractor with the Engineer's approval. Trees and shrubs which are not in direct conflict with proposed new construction shall be saved and protected from damage.

6. The Contractor shall give all property owners and/or tenants of developed property abutting the construction of this project a minimum of ten (10) days advance notice prior to start of construction.

7. Rubble from the removal of miscellaneous structures and excess excavation which is to be wasted shall be disposed of on sites to be provided by the Contractor. Those sites shall be approved by the engineer as to suitability, appearance and site location. Locations that, in the opinion of the Engineer, will leave an unsightly appearance will not be approved.

8. Prior to bid preparation, it will be the Contractor's responsibility to field check the project area to determine the extent of Site Clearing and Restoration to be performed.

9. Contractor shall not start work on the project until the project inspector is assigned to the project and is present on the site. Any work done without inspection will be required to be uncovered for inspection.

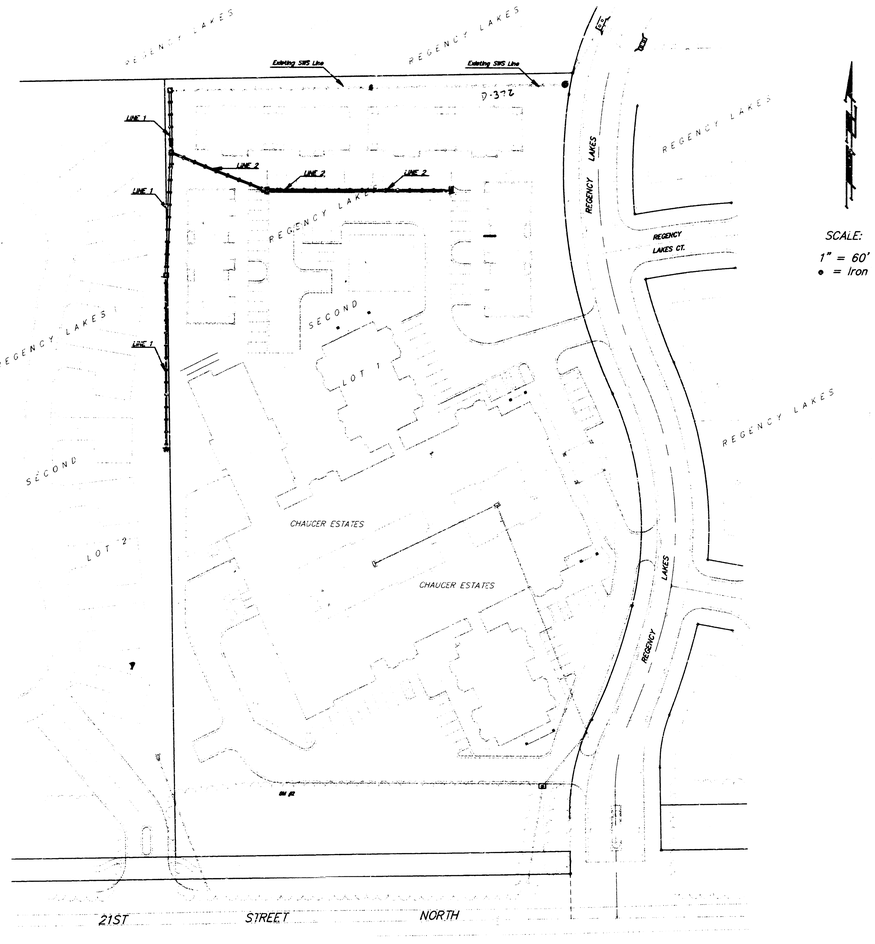

SCALE:
1" = 60'
• = Iron

BENCHMARK:

"□" Cut in Top of North Side of RCBC 600'± West of Centerlines of Greenwich and 21st Street North.

Elev. = 175.11 City Datum

RR Spike Set in Existing Tree 104'± East of the West Lot Line of Lot 1, Regency Lakes Second, and 48'± North of 21st Street Right-of-Way.

Elev. = 189.76 City Datum

INDEX:

1 Title Sheet
2 Line 1 & 2
3 Line 1
4 Special Yard Inlet Detail
5 Standard Drop Inlet Detail
6 Plat of Regency Lakes Second

APPROVED AS NOTED
BY CITY ENGINEER OF WICHITA

Storm Sewers VRH 10/24/97

NOTE TO CONTRACTORS

Inspection and testing for this project is to be provided by a Licensed Consulting Engineering Firm under contract with the Owner/Developer. Said Inspection to be in accordance with the City of Wichita standard construction engineering practices and certified by a Licensed Professional Engineer. No work shall be performed in dedicated easements or public right-of-way by the Contractor without such inspection nor shall any work be commenced without written authorization by the City Engineer. All Construction and Materials shall comply with the City of Wichita Specifications and Standards (on file and available in the City Engineer's Office).

BOOKED
7-21-98
MCG
D-396

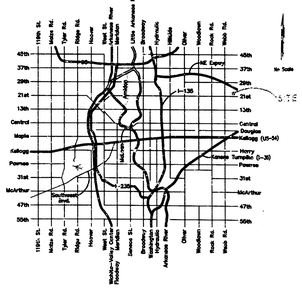

M. BRENT WOOTEN
LICENSED
8479
PROFESSIONAL ENGINEER
10/24/97

ASBUILT 5/98 BAUGHMAN CO. P.A. October 18, 1997

BAUGHMAN COMPANY P. A.
ENGINEERING, SURVEYING, & PLANNING
316-262-7271 • 315 ELLIS • WICHITA, KANSAS 67211

Benchmarks:

"□" Cut in Top of North Side of RCBC 600'± West of Centerlines of Greenwich and 21st Street North.

Elev. = 175.11 City Datum

RR Spike Set in Existing Tree 104'± East of the West Lot Line of Lot 1, Regency Lakes Second, and 48'± North of 21st Street Right-of-Way.

Elev. = 189.76 City Datum

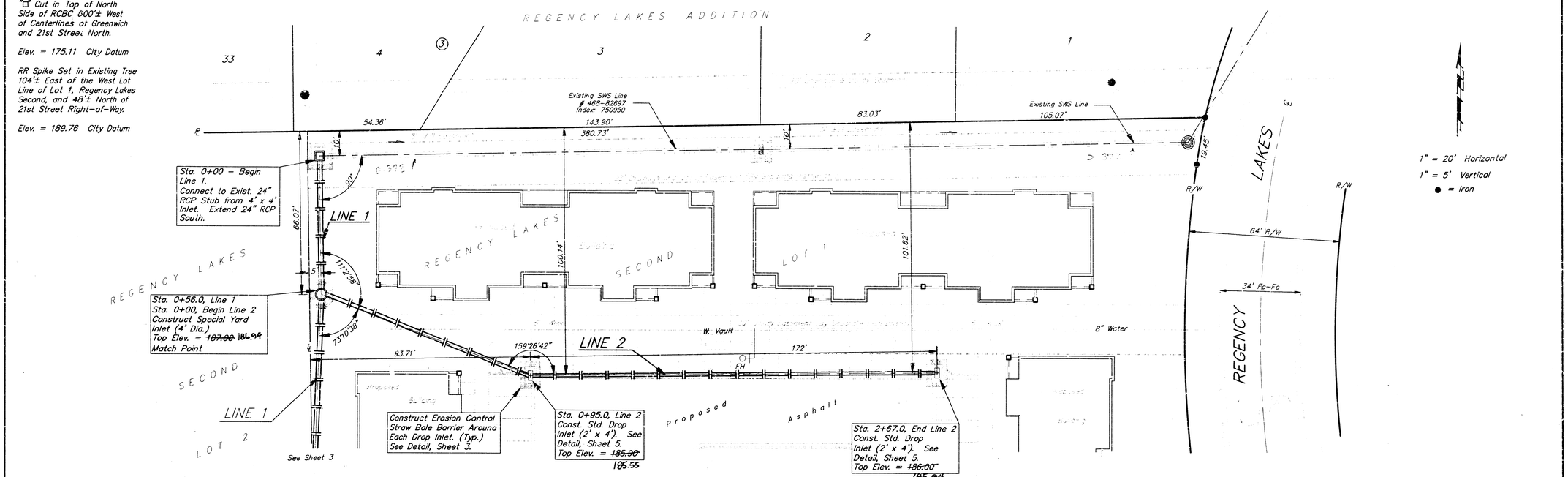

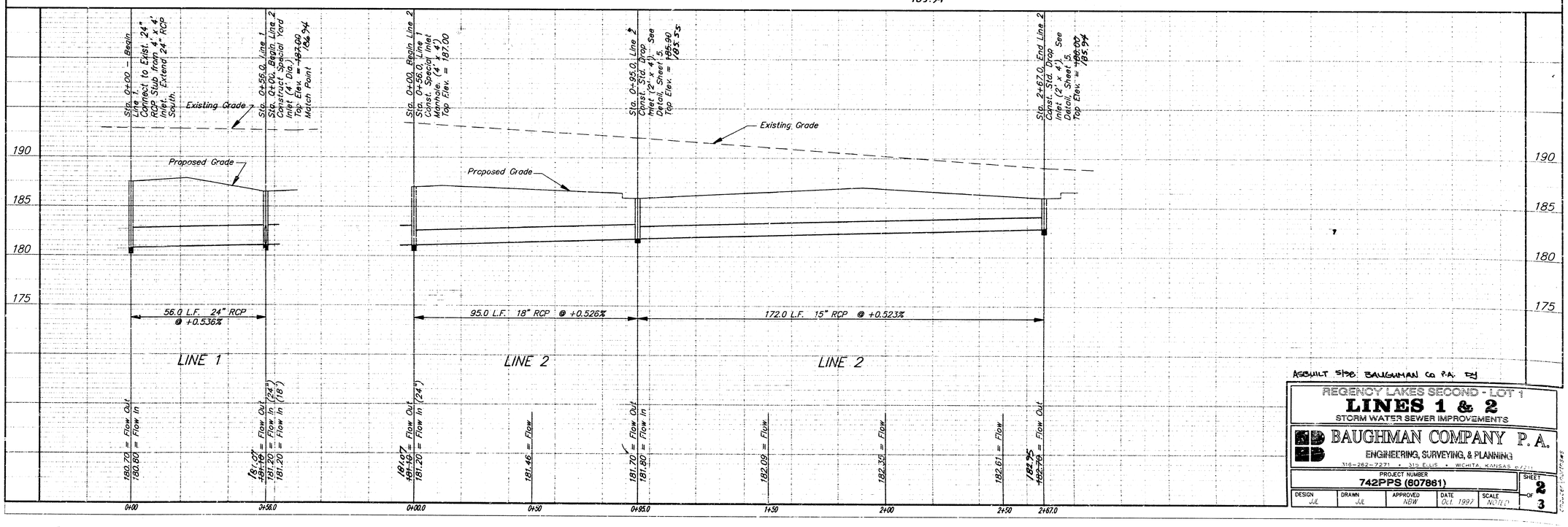

ASBUILT SIGN: BAUGHMAN CO P.A. RJ

REGENCY LAKES SECOND - LOT 1

LINES 1 & 2

STORM WATER SEWER IMPROVEMENTS

BAUGHMAN COMPANY P. A.
ENGINEERING, SURVEYING, & PLANNING
316-262-7271 • 313 ELLIS • WICHITA, KANSAS 67211

PROJECT NUMBER	SHEET
742PPS (607861)	2 OF 3

DESIGN	DRAWN	APPROVED	DATE	SCALE
JJL	JJL	NDW	Oct. 1997	NOTED

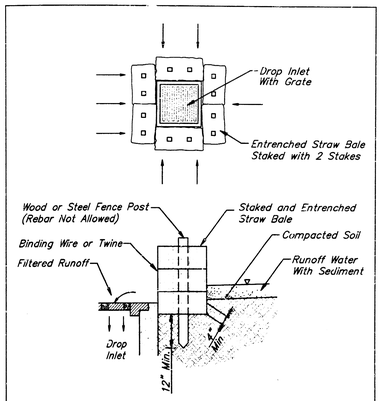

Straw Bale Barrier Detail

Note: Straw Bale Barriers to be Paid per Each as Inlet Sediment Barriers.

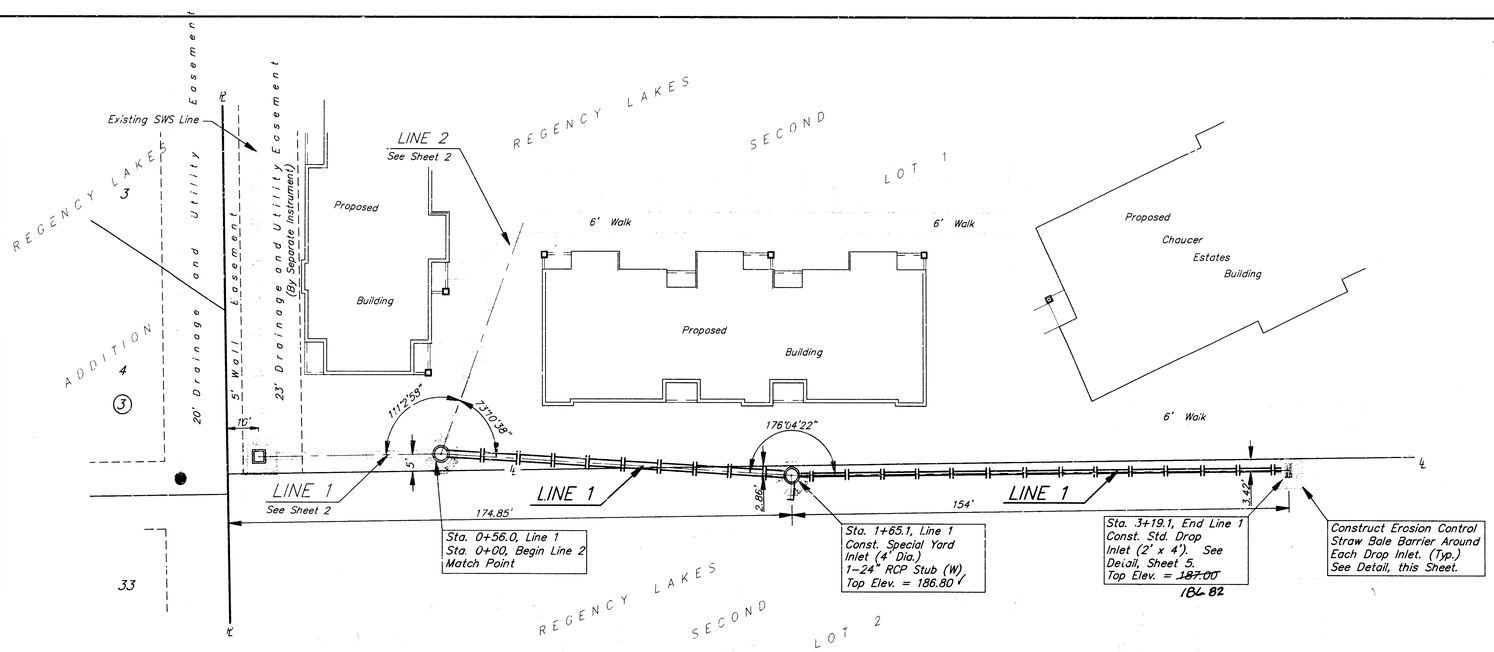

1" = 20' Horizontal
1" = 5' Vertical
● = Iron

Benchmarks:

"□" Cut in Top of North Side of RCBC 600'± West of Centerlines of Greenwich and 21st Street North.

Elev. = 175.11 City Datum

RR Spike Set in Existing Tree 104'± East of the West Lot Line of Lot 1, Regency Lakes Second, and 48'± North of 21st Street Right-of-Way.

Elev. = 189.76 City Datum

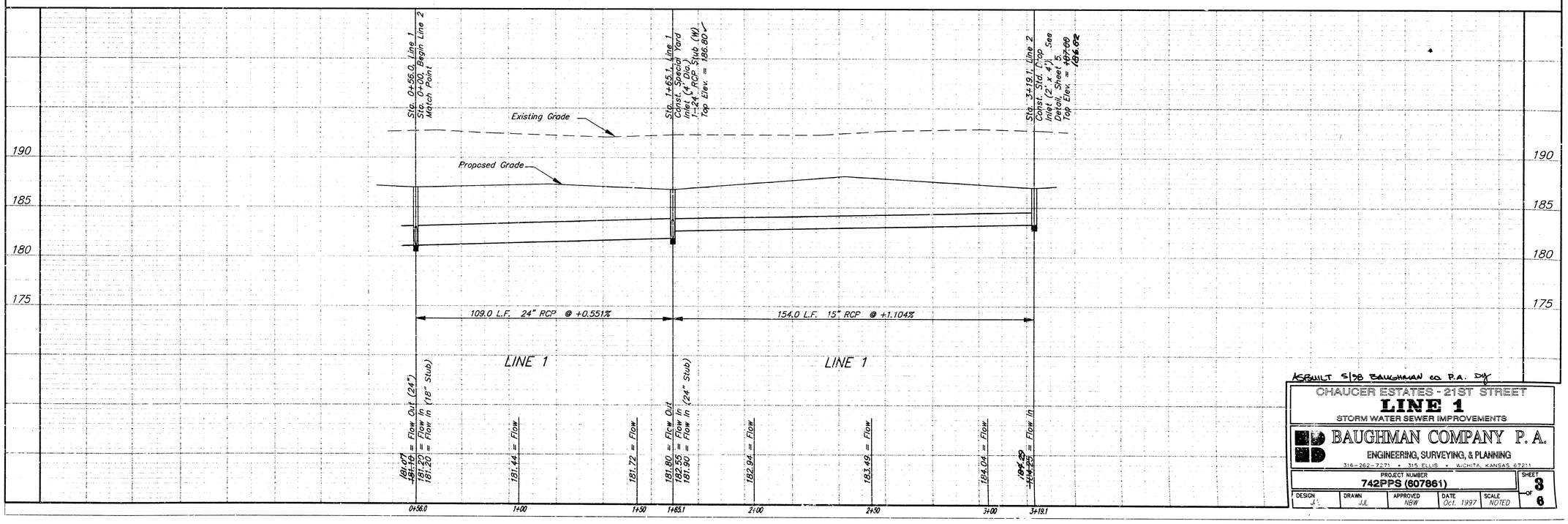

AS BUILT 5/98 BAUGHMAN CO. P.A. DJ

CHAUCER ESTATES - 21ST STREET

LINE 1

STORM WATER SEWER IMPROVEMENTS

BAUGHMAN COMPANY P.A.

ENGINEERING, SURVEYING, & PLANNING

316-262-7271 • 315 ELLIS • WICHITA, KANSAS 67211

PROJECT NUMBER					SHEET
742PPS (607861)					3 OF 6
DESIGN	DRAWN	APPROVED	DATE	SCALE	
JJL	JJL	NBW	Oct. 1997	NOTED	

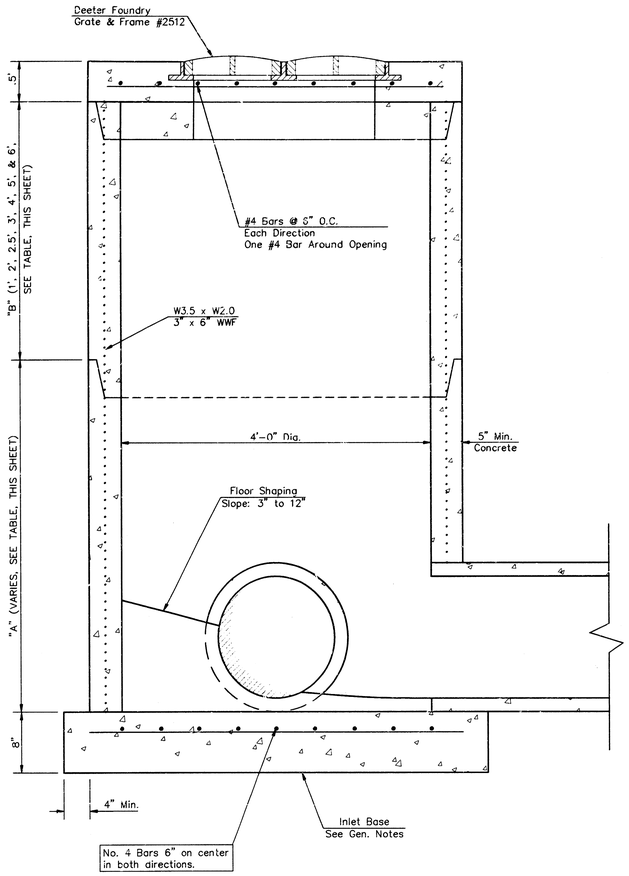

YARD INLET

LINE #	STA.	TOP OF INLET	INLET FLOW	"A"	"B"
1	0+56.0	187.00	181.10	3.4'	2.0'
1	0+50.7	186.80	181.80	3.5'	1'

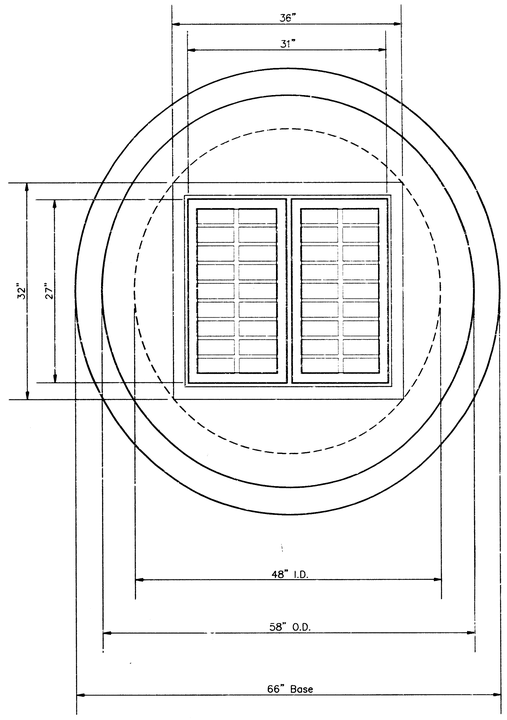

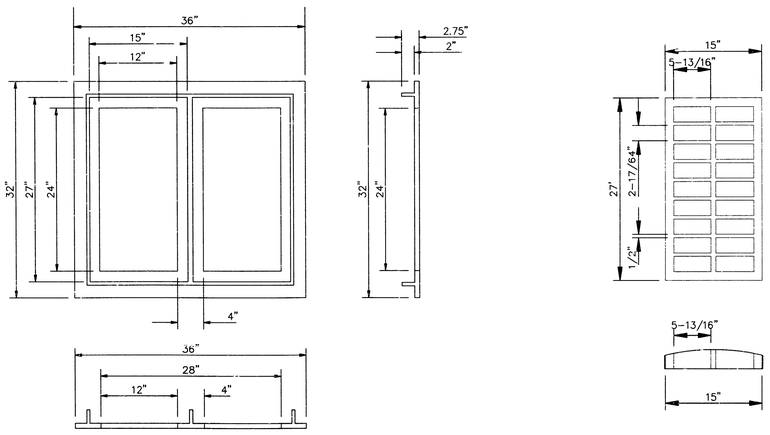

DEETER #2512 CATCH BASIN INLET GRATE & FRAME

GENERAL NOTES

1. Mortar used in masonry construction shall contain 8 sacks of cement per cubic yard. Concrete used in yard inlet bases shall conform to the requirements of concrete for concrete pavement construction as specified in the city standard paving specifications using city concrete cement mix without air entraining.

2. Reinforcing steel shc be installed in the yard inlet bases and shall consist of no. 4 bars placed on 6" centers in both directions. The yard inlet base reinforcement shall be placed 6" above the bottom of the yard inlet base. All costs for furnishing and installing reinforcing steel shall be included in the unit price bid for the yard inlet.

3. The floors of all yard inlet shall be shaped with flow channels such that the inlets will be self cleaning and free of areas where solids could be deposited. Flow channels shall be formed to match the bottom halves of the inflowing pipes and the outflowing pipe as shown by the drawings. Inlet floors shall have slopes of 3 inches per foot in the areas outside of the flow channels sloped toward the flow channels. Pipes laid through inlets shall have the top half removed to neat lines for the full inside diameter of the inlet. Inlet floors shall then be shaped around the bottom half of the pipe which forms the flow channel.

4. Pipes installed within the excavation made for the inlet shall be cradled with concrete to the limits of the inlet excavation. When clay pipe is used, the cradle shall extend to the first joint outside the inlet. The cradle shall be terminated at the clay pipe joint in a manner which will maintain the flexibility of the joint. Cost of cradle within inlet excavation or to clay pipe joints adjacent to inlet shall be included in the unit price bid for the inlet.

5. Inlet grate castings and inlet frame castings shall conform to the requirements as indicated in the standard specifications and as shown in the standard detail drawing.

6. The crowns of inflowing pipes shall never be set lower than the crown of the outflowing pipe.

7. Joints between inlet sections to be sealed with two two wraps of extruded butyl rubber joint mastic meeting City of Wichita Type "P" Manhole Specifications.

8. Special yard inlet shall be paid for at the unit price bid per each. All standard yard inlet diameters will be 4'.

NOTE: Grates shall be imprinted on the top surface with "CITY OF WICHITA" using letters at least 1" in height. Other marking methods may be approved by the engineer.

CHAUCER ESTATES SWS IMPROVEMENTS

SPECIAL YARD INLET

REGENCY LAKES 2ND

BAUGHMAN COMPANY P. A.
ENGINEERING, SURVEYING, & PLANNING
316-262-7271 • 315 ELLIS • WICHITA, KANSAS 67211

PROJECT NUMBER 742PPS (807861)

SHEET 4 OF 6

DESIGN	DRAWN	APPROVED	DATE	SCALE
STAFF	STAFF	STAFF	10-97	NONE

AUBURN3 YARDINL1 97-02-6017

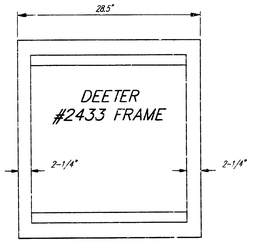



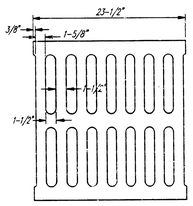

DEETER #2433 GRATE

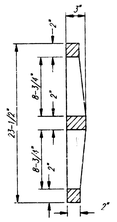

NOTE: Grates shall be imprinted on the top surface with "CITY OF WICHITA" using letters at least 1" in height. Other marking methods may be approved by the engineer.

24" x 24" Frame and Grate Detail

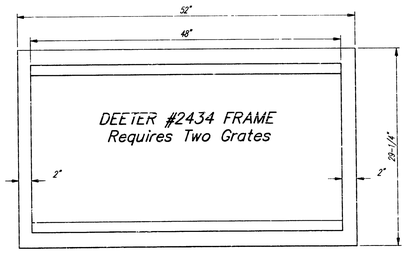

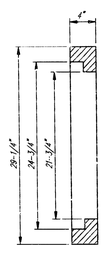

Double 24" x 24" Frame Detail

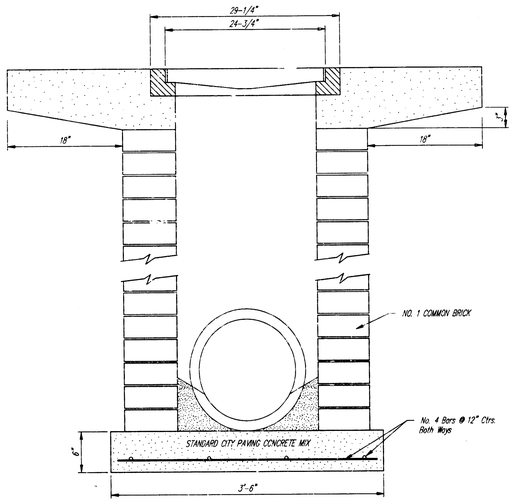

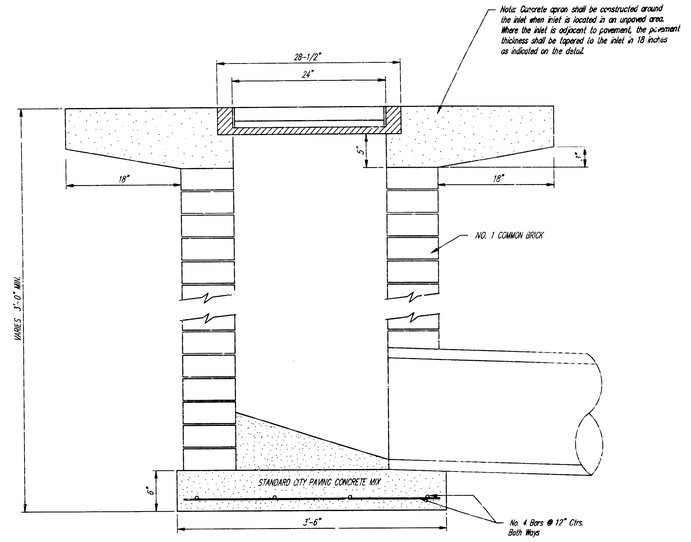

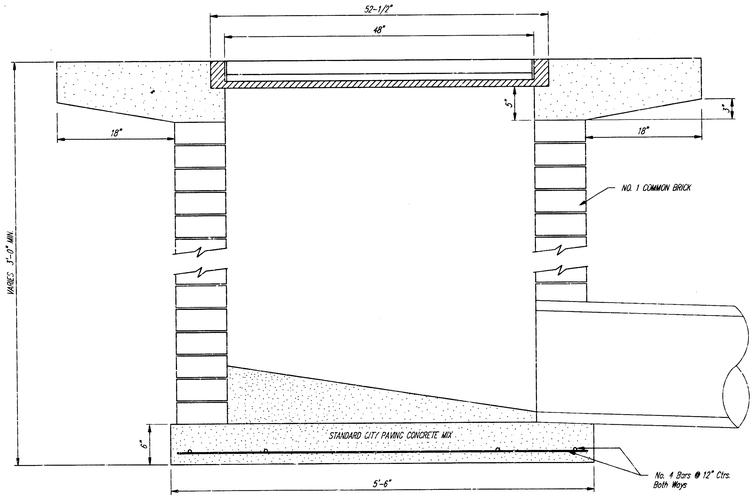

City of Wichita Standard

Drop Inlet

Chaucer Estates SWS Improvements

BAUGHMAN COMPANY P. A.

ENGINEERING, SURVEYING, & PLANNING

316-262-7271 • 315 BELLE • WICHITA, KANSAS 67211

PROJECT NUMBER					SHEET
742PPS (607861)					OF 5 6
DESIGN STAFF	DRAWN STAFF	APPROVED STAFF	DATE JULY 2007	SCALE	

DETAILS DRAWING 7

REGENCY LAKES SECOND

AN ADDITION TO WICHITA, SEDGWICK COUNTY, KANSAS

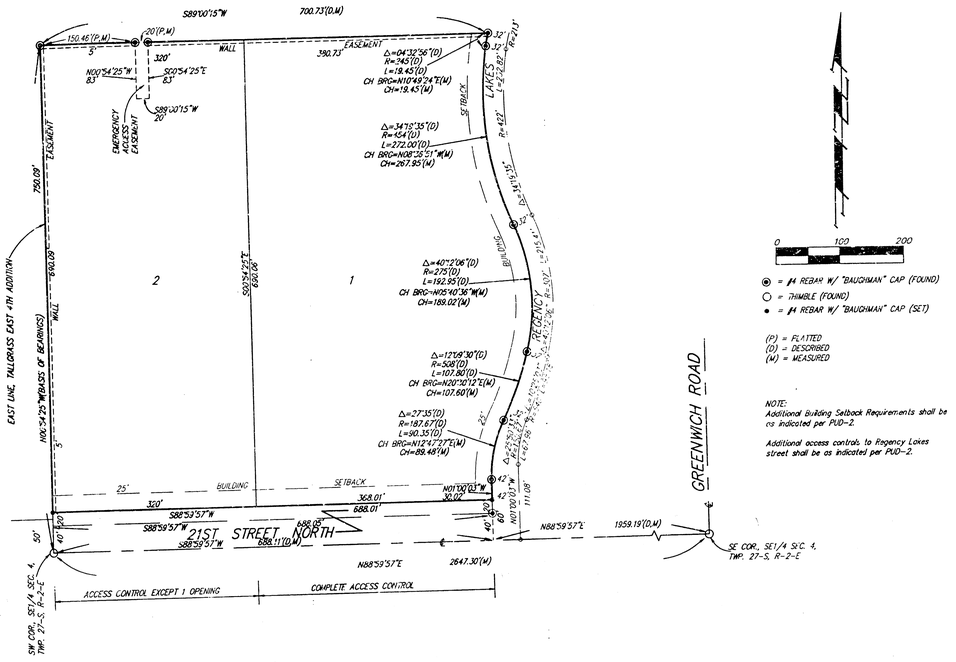

◉ = ½ REBAR W/ "BAUGHMAN" CAP (FOUND)
○ = THIMBLE (FOUND)
● = ½ REBAR W/ "BAUGHMAN" CAP (SET)

(P) = PLATTED
(D) = DESCRIBED
(M) = MEASURED

NOTE:
Additional Building Setback Requirements shall be as indicated per PUD-2.

Additional access controls to Regency Lakes street shall be as indicated per PUD-2.

Know all men by these presents that we, the undersigned, have caused the land described in the surveyors certificate to be platted into Lots and a Street to be known as "REGENCY LAKES SECOND", an Addition to Wichita, Sedgwick County, Kansas. The wall easements are hereby granted as indicated for the construction and maintenance of a private screening wall and utility main lines and service lines shall be allowed to cross these easements. The emergency access easement is hereby granted as indicated for emergency access purposes and no fences, encroachments, or other obstructions shall be constructed or placed within this easement. This emergency access easement shall be for the benefit of the adjoining property to the north of this plat and a driving surface acceptable to the Fire Department shall be installed and maintained within this easement. The street is hereby dedicated to and for the use of the public. All abutters rights of access to or from 21st Street North over and across the south line of Lots 1 and 2 are hereby granted to the City of Wichita, Kansas provided, however, that said Lot 2 shall have access to 21st Street North at one location as shall be determined by the City Engineer of the City of Wichita, Kansas.

Schmidt-McKay Development and Management Group, L.L.C.

John W. McKay, Jr., Manager

The City of Wichita, Kansas, a Municipal Corporation

Bob Knight, Mayor

Attest: Pat Burnett, City Clerk
Pat Burnett

State of Kansas)
Sedgwick County) SS

The foregoing instrument acknowledged before me, this 10th day of FEBRUARY, 1997, by John W. McKay, Jr., manager of Schmidt-McKay Development and Management Group, L.L.C., on behalf of the company.

PHILIP J. MEYER Notary Public

My App't. Exp. 5/5/97

PHILIP J. MEYER
NOTARY PUBLIC
STATE OF KANSAS

State of Kansas)
Sedgwick County) SS

We, Baughman Company, P.A., Surveyors in aforesaid county and state do hereby certify that we have surveyed and platted "REGENCY LAKES SECOND", an Addition to Wichita, Sedgwick County, Kansas, and that the accompanying plat is a true and correct exhibit of the property surveyed, described as follows: A tract of land in the SW1/4 and the SE1/4 of Sec. 4, Twp. 27-S, R 2-E of the 6th P.M., Sedgwick County, Kansas and further described as follows: Beginning at the SW Corner of said SE1/4; thence N88°59'57"E along the south line of said SE1/4, 688.11 feet to a point 1959.19 feet west of the SE Corner of said SE1/4; thence N01°00'03"W, 90.02 feet to the P.C. of a curve to the right; thence northerly along said curve, having a central angle of 27°35' and a radius of 187.67 feet, an arc distance of 90.35 feet, (having a chord length of 89.48 feet bearing N12°47'27"E), to the P.R.C. of a curve to the left; thence northerly along said curve, having a central angle of 12°09'30" and a radius of 508 feet, an arc distance of 107.80 feet, (having a chord length of 107.60 feet bearing N20°30'12"E), to the P.C.C. of a curve to the left; thence northerly along said curve, having a central angle of 40°12'06" and a radius of 275 feet, an arc distance of 192.95 feet, (having a chord length of 189.02 feet bearing N05°40'36"W), to the P.R.C. of a curve to the right; thence northerly along said curve, having a central angle of 34°19'35" and a radius of 454 feet, an arc distance of 272.00 feet, (having a chord length of 267.95 feet bearing N08°36'51"W), to the P.C.C. of a curve to the right; thence northerly along said curve, having a central angle of 04°32'56" and a radius of 245 feet, an arc distance of 19.45 feet, (having a chord length of 19.45 feet bearing N10°49'24"E); thence S89°00'15"W, 700.73 feet to a point on the east line of Tallgrass East 4th Addition to Wichita, Sedgwick County, Kansas; thence south along said east line, 750.09 feet to the point of beginning.

Existing public easements and dedications being vacated by virtue of K.S.A. 12-512(b).

Baughman Company, P.A.

Michael G. Conrey
Michael G. Conrey, Surveyor

MICHAEL G. CONREY REGISTERED LS-9711 KANSAS LAND SURVEYOR

We, the undersigned, holders of a mortgage on the above described property, do hereby consent to this plat of "REGENCY LAKES SECOND", an Addition to Wichita, Sedgwick County, Kansas.

Prairie State Bank

Chris A Anderson, SVP
CHRIS A ANDERSON (title)

State of Kansas)
Sedgwick County) SS

The foregoing instrument acknowledged before me this 14th day of February, 1997, by Chris A Anderson, SVP (title), Prairie State Bank, on behalf of the bank.

Kimberly A Hommertzheim Notary Public
KIMBERLY A. HOMMERTZHEIM

My App't. Exp. 06-15-99

Kimberly A Hommertzheim
Notary Public - State of Kansas
My Appt. Expires 06-15-99

This plat of "REGENCY LAKES SECOND", an Addition to Wichita, Sedgwick County, Kansas has been submitted to and approved by the Wichita-Sedgwick County Metropolitan Area Planning Commission, Wichita, Kansas.

Dated this 17th day of October, 1996

Wichita-Sedgwick County Metropolitan Area Planning Commission

John C. Frye, Chairman
John C. Frye

Marvin S. Krout, Secretary
Marvin S. Krout

This plat approved and all dedications shown hereon, accepted by the City Council of the City of Wichita, Kansas, and consent is hereby given for the formation of benefit districts within the boundary of this plat by the Board of County Commissioners as they deem necessary to make street improvements to serve this area, this 15 day of April 1997

Bob Knight, Mayor

Pat Burnett, City Clerk
Pat Burnett

Entered on transfer record this 19th day of June, 1997

James Alford, County Clerk
JAMES ALFORD

State of Kansas)
Sedgwick County) SS

This is to certify that this plat has been filed for record in the office of the Register of Deeds, this 20th day of June, 1997, at 3:30 o'clock P.M. and is duly recorded.

#1612200

LARRY CONSOLVER, Register of Deeds

Michael D. Hurtt Deputy
MICHAEL D. HURTT

6
6

R3-173