

LOCATION MAP

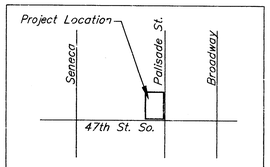

VICINITY MAP

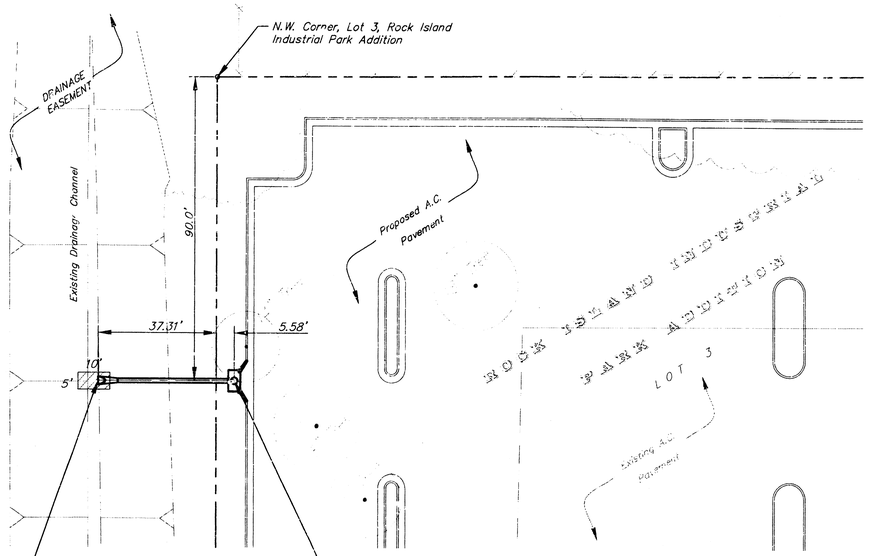

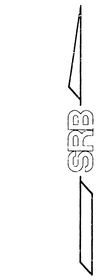

SCALE
1" = 20' Horiz. (Plan)
1" = 5' Vert. (Profile)

GENERAL NOTES

Traffic will not be affected by construction of this project.

Storm sewer shall be constructed in accordance with City of Wichita Standard Specifications for Storm Sewer Construction.

Areas of public R/W disturbed by construction of this project shall be restored in accordance with City of Wichita Administrative Regulation AR 78.

APPROVED AS NOTED
BY CITY ENGINEER OF WICHITA

Sanitary Sewers _____
Storm Sewers VRH 10/14/97
Driveway Approaches _____
Water Mains _____
Paving _____

NOTE TO CONTRACTORS

Inspection and testing for this project are to be provided by a Licensed Consulting Engineering Firm under contract with the Owner/Developer. Said inspection to be in accordance with the City of Wichita standard construction engineering practices and certified by a Licensed Professional Engineer. No work shall be performed in dedicated easements or public right-of-way by the Contractor without such inspection, nor shall any work be commenced without written authorization by the City Engineer.

DRAINAGE CALCULATIONS

D.A. = 1.3 ACRES
C5 = 0.87
C100 = 0.89
I5 = 4.56 in/hr.
I100 = 7.37 in/hr.
Q5 = 5.2 cfs
Q100 = 8.5 cfs

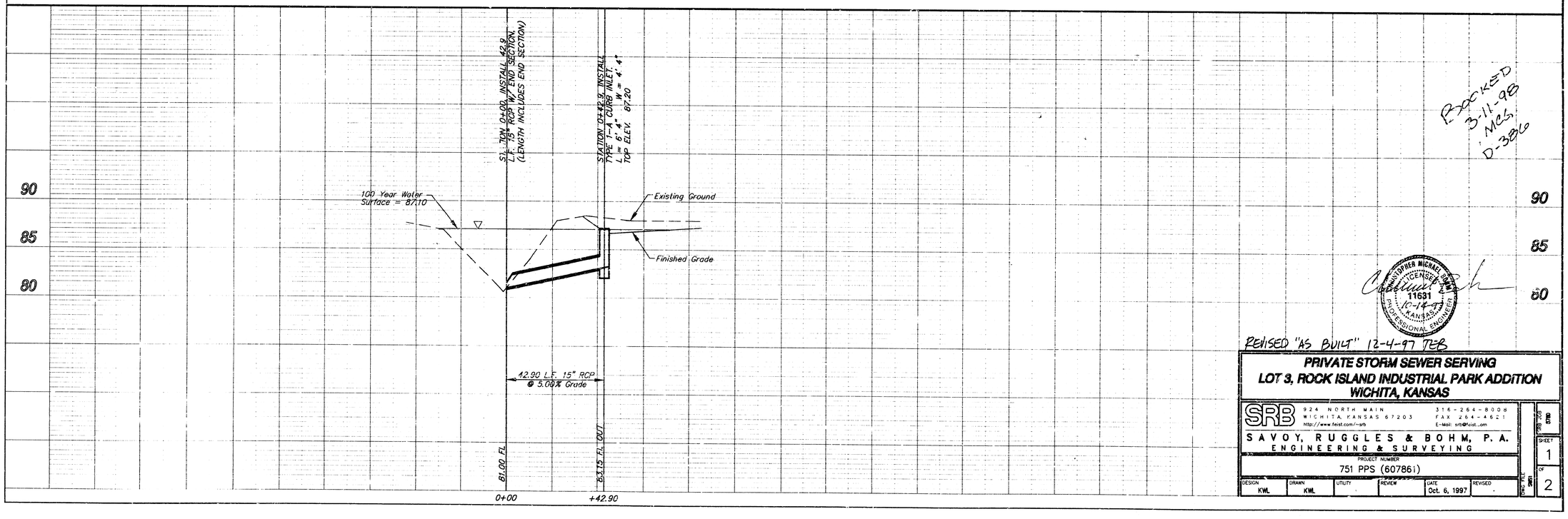

BOOKED 3-11-98 MCG D-386

CHRISTOPHER MICHAEL BOHM LICENSED 11631 10-14-97 KANSAS PROFESSIONAL ENGINEER

REVISED "AS BUILT" 12-4-97 TEB

PRIVATE STORM SEWER SERVING
LOT 3, ROCK ISLAND INDUSTRIAL PARK ADDITION
WICHITA, KANSAS

SRB 924 NORTH MAIN WICHITA, KANSAS 67203 http://www.feist.com/~srb 316-264-8008 FAX 264-4621 E-Mail: srb@feist.com

SAVOY, RUGGLES & BOHM, P. A.
ENGINEERING & SURVEYING

PROJECT NUMBER
751 PPS (607861)

DESIGN	DRAWN	UTILITY	REVIEW	DATE	REVISED
KWL	KWL			Oct. 6, 1997	

DWG. FILE SWS1 | SRB JOB 5780 | SHEET 1 OF 2

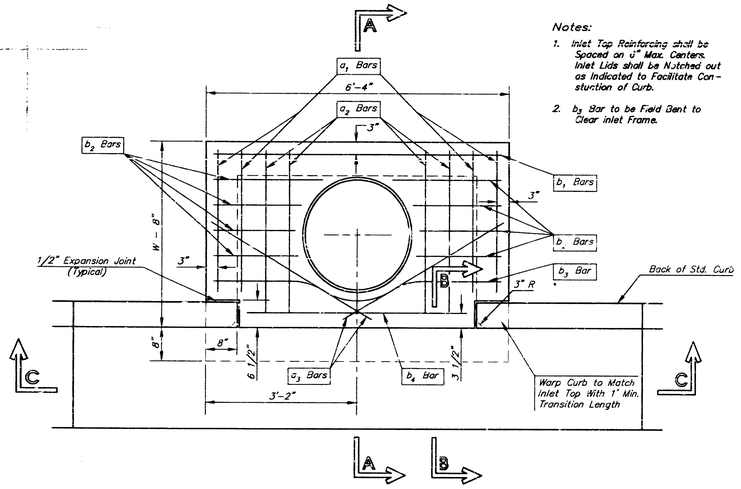

PLAN

Notes:

1. Inlet Top Reinforcing shall be Spaced on 6" Max. Centers. Inlet Lids shall be Notched out as Indicated to Facilitate Construction of Curb.
2. b_2 Bar to be Field Bent to Clear Inlet Frame.

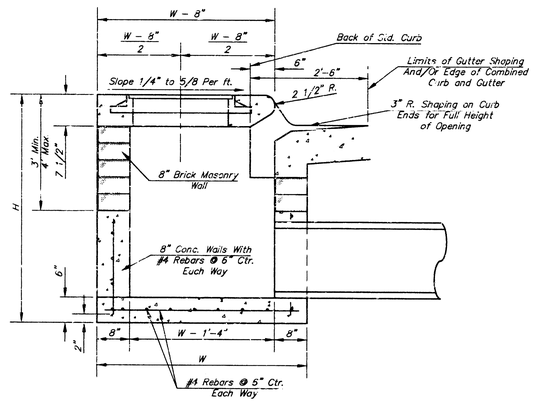

SECTION A—A

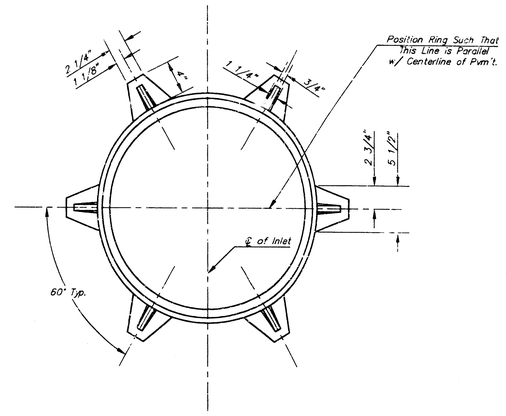

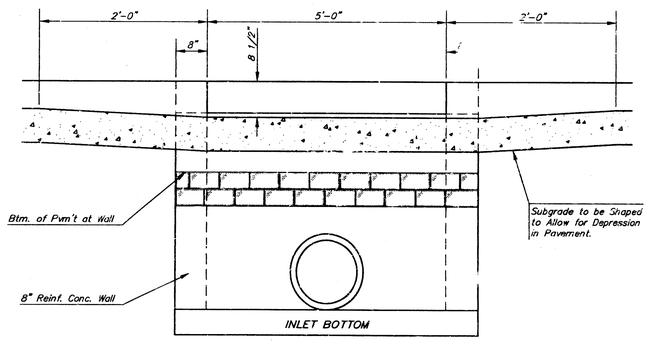

SECTION C—C

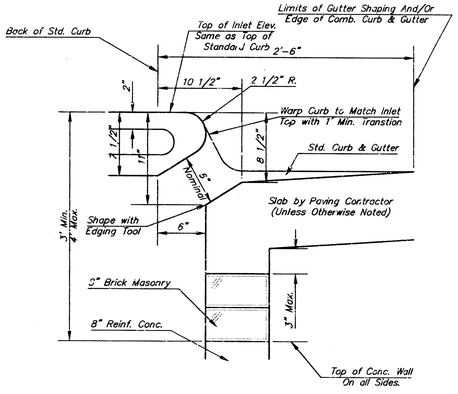

SECTION B—B

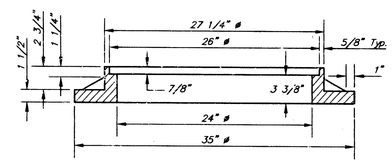

WT. = 180 lbs.

MANHOLE RING AND COVER

*See City of Wichita Standard Manhole Ring and Cover Detail Sheet for Cover Details to Be Used With Inlet Frame.

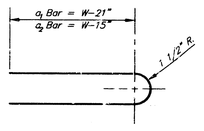

BENDING DIAGRAM

STEEL SCHEDULE

BAR	a_1	a_2	a_3	b_1 W=4'-4"	b_1 W=5'-4"	b_1 W=6'-4"	b_1 W=7'-4"	b_1 W=8'-4"	b_2	b_3	b_4	Wt. Lbs.
NUMBER	4	4	2	1	3	5	7	9	6	1	1	
SIZE	#4	#4	#4	#4	#4	#4	#4	#4	#4	#4	#6	
LENGTH W=4'-4"	5'-7"	6'-7"	4'-0"	6'-1"	–	–	–	–	1'-9"	6'-2"	4'-8"	60±
LENGTH W=5'-4"	7'-7"	8'-7"	5'-0"	–	6'-1"	–	–	–	1'-9"	6'-2"	4'-8"	81±
LENGTH W=6'-4"	9'-7"	10'-7"	6'-0"	–	–	6'-1"	–	–	1'-9"	6'-2"	4'-8"	101±
LENGTH W=7'-4"	11'-7"	12'-7"	7'-0"	–	–	–	6'-1"	–	1'-9"	6'-2"	4'-8"	121±
LENGTH W=8'-4"	13'-7"	14'-7"	8'-0"	–	–	–	–	6'-1"	1'-9"	6'-2"	4'-8"	141±

Note: a_3 Bars to be Placed Approx. 2" Below Top of Inlet Cover.

STANDARD CURB INLET PRECAST TOPS			
W	PRE-CAST TOP SIZE	PIPE SIZE	CU. YD. CONC.
4'-4"	3'-8" 6'-4" 7 1/2"	21" & SMALLER	0.38±
5'-4"	4'-8" 6'-4" 7 1/2"	24" & 30"	0.51±
6'-4"	5'-8" 6'-4" 7 1/2"	36" & 42"	0.64±
7'-4"	6'-8" 6'-4" 7 1/2"	48" & 54"	0.77±
8'-4"	7'-8" 6'-4" 7 1/2"	60" & 66"	0.90±

GENERAL NOTES

1. Concrete tops to be installed on thin mortar cushion to insure full support along brick walls. Concrete tops may be cast in place or precast. Concrete used for inlet construction shall be concrete pavement mix.
2. Contractor shall have the option of constructing 8" brick masonry walls between the concrete inlet base and top on this inlet when W=6'-4" and H=7'-0" or less.
3. Inlet invert shall be shaped with 8 sack sand mix concrete to create flow channels and to increase hydraulic efficiency such that the inlet will be self cleaning between all inlet and/or outlet pipes.
4. The ends of all pipes installed in inlets shall be cut off flush with the inside face of the inlet wall.

THE CITY OF WICHITA

CITY ENGINEER'S OFFICE
CITY HALL — SEVENTH FLOOR
455 NORTH MAIN STREET
WICHITA, KANSAS 67202
(316) 268-4601
(316) 268-4114 FAX

STANDARD TYPE 1 CURB INLET OPENING = 6'x5'-0"

M. E. LINDEBAK P.E. – CITY ENGINEER

PROJECT NUMBER	INDEX OF S
751 PPS	607861
DATE MAR 96	SHEET 2 OF 2

ep 20 of 05 ag