STORM WATER SEWER IMPROVEMENTS TO SERVE

CHADSWORTH COMMERCIAL 3RD ADDITION - LOT 1

CITY OF WICHITA, KANSAS

Michael E. Lindebak, P.E. City Engineer

Private Project Number

788 PPS (607861)

GENERAL NOTES:

1. Contractor will be required to provide notice to utility companies a minimum of twenty-four (24) hours prior to any excavation, as follows:

Kansas One-Call	637-2470

The Contractor must notify the following in case of an emergency:

Cablevision	262-4270
or	263-2061
K.P.L. Gas Service Company	263-7511
Kansas Gas & Electric Company	264-1141
Arkla Gas Company	942-8350
or	263-8161
Southwestern Bell Telephone Company	1-571-2611
City of Wichita Water Department	268-4908
City of Wichita Sewer Maintenance	268-4071

2. Underground utility service lines and overhead utility pole lines are to be adjusted as necessary by others prior to construction unless the plans specifically call for their adjustment by the Contractor or unless the plans specifically identify a utility to be adjusted by its owner during construction. Existing utilities and their location, as shown on the plans, represent the best information obtainable for design. The Contractor will be required to work around existing utilities within the right-of-way which do not conflict with proposed construction.

3. Contractor shall not start work on the project until th project inspector is assigned to the project and is present on the site. Any work done without inspection will be required to be uncovered for inspection.

4. Trees and shrubs in public right-of-way which are in direct conflict with proposed new construction shall be removed by the Contractor with the Engineer's approval. Trees and shrubs which are not in direct conflict with proposed new construction shall be saved and protected from damage.

5. The Contractor shall be responsible for preserving property irons. The Contractor will be required to re-establish any property irons which are damaged or destroyed by his construction operations. Such irons shall be re-established by a licensed land surveyor in accordance with state laws.

6. All areas disturbed by construction operations shall by seeded with rye grass at a rate of 300 lbs/acre immediately following construction in that area. Prior to seeding, area shall be prepared per City specs.

BENCHMARK:

City of Wichita Disk Located 64' East and 99' South of the Intersection of 21st Street North and Maize Road.
Elevation = 164.30 (City Datum)

INDEX:

1 Line 1
2 Type 1 Inlet Detail
3 Copy of Chadsworth Comm. 3rd Add. Plat

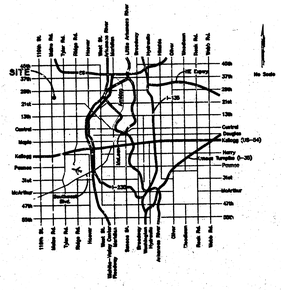

LOCATION MAP

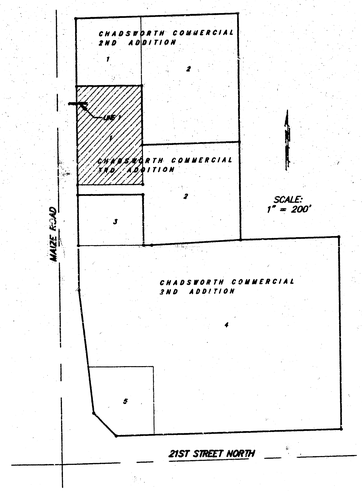

BENEFIT DISTRICT

APPROVED AS NOTED
BY CITY ENGINEER OF WICHITA

Storm Sewers VRH 4/9/98

NOTE TO CONTRACTORS

Inspection and testing for this project is to be provided by a Licensed Consulting Engineering Firm under contract with the Owner/Developer. Said inspection to be in accordance with the City of Wichita standard construction engineering practices and certified by a Licensed Professionel Engineer. No work shall be performed in dedicated easements or public right-of-way by the Contractor without such inspection nor shall any work be commenced without written authorization by the City Engineer. All Construction and Materials shall comply with the City of Wichita Specifications and Standards (on file and available in the City Engineer's Office).

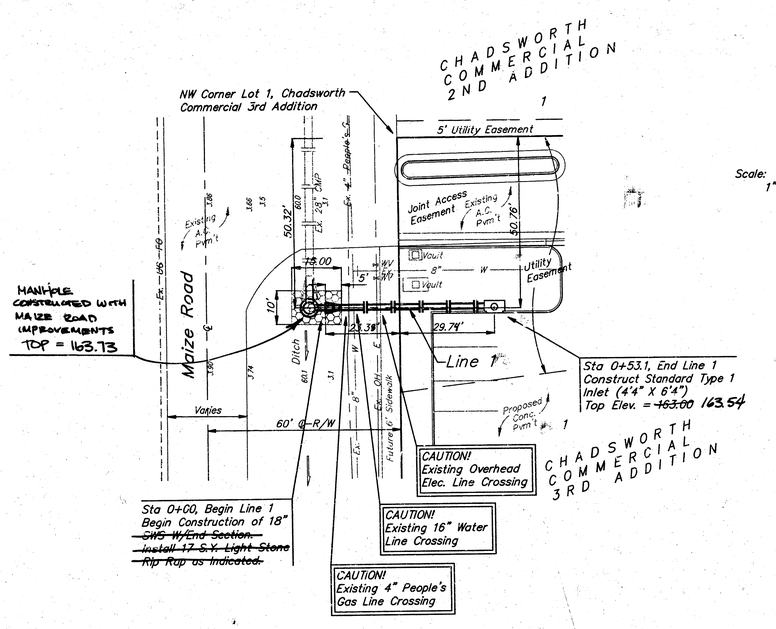

Scale: 1" = 20' Horizontal
1" = 5' Vertical
● = Iron

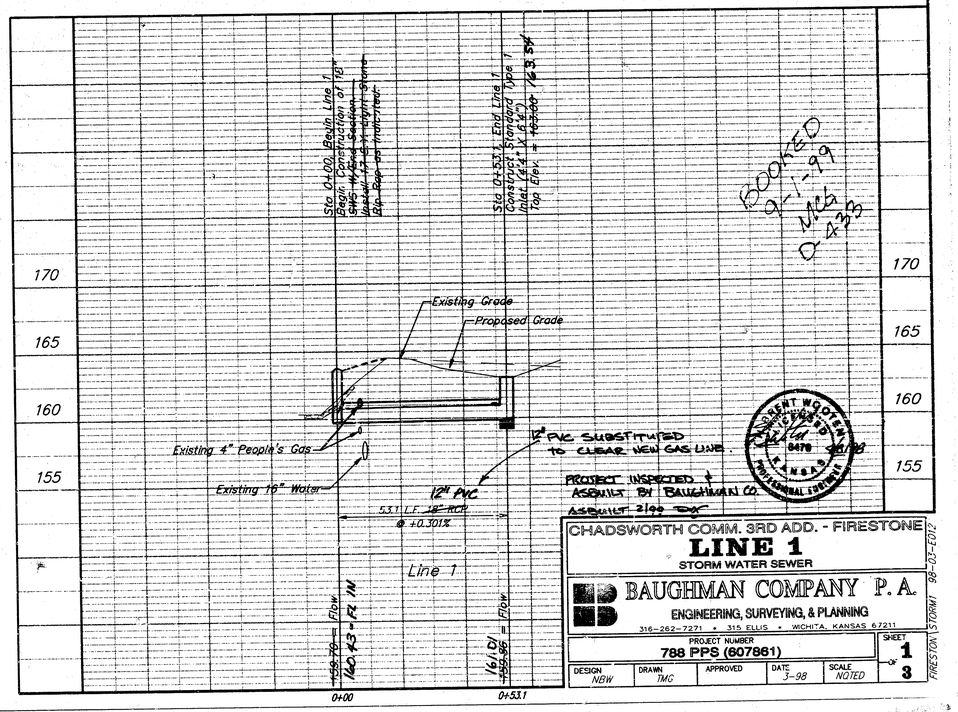

BOOKED 9-1-99 MCA D 4-33

PROJECT INSPECTED + ASBUILT BY BAUGHMAN CO. ASBUILT 2/03 DC

CHADSWORTH COMM. 3RD ADD. - FIRESTONE

LINE 1

STORM WATER SEWER

BAUGHMAN COMPANY P.A.

ENGINEERING, SURVEYING, & PLANNING

316-262-7271 • 315 ELLIS • WICHITA, KANSAS 67211

PROJECT NUMBER	SHEET
788 PPS (607861)	1 of 3

DESIGN	DRAWN	APPROVED	DATE	SCALE
NBW	TMC		3-98	NOTED

FIRESTON\STORM1 98-03-E012

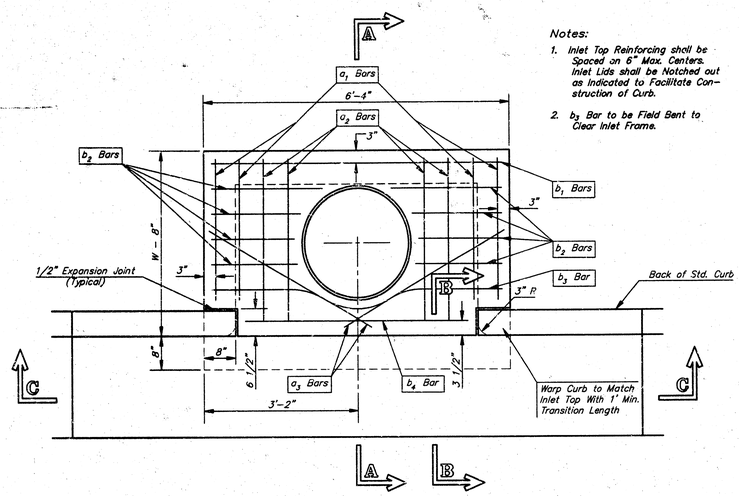

PLAN

Notes:

1. Inlet Top Reinforcing shall be Spaced on 6" Max. Centers. Inlet Lids shall be Notched out as Indicated to Facilitate Construction of Curb.
2. b_3 Bar to be Field Bent to Clear Inlet Frame.

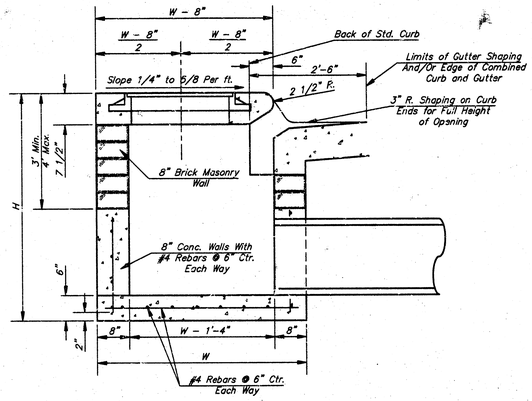

SECTION A–A

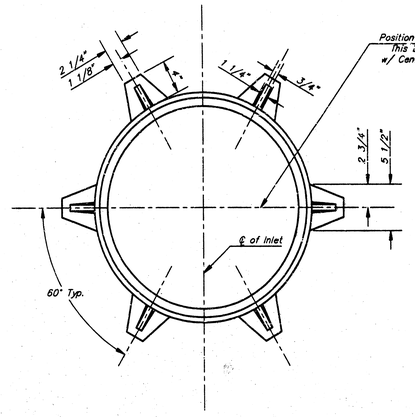

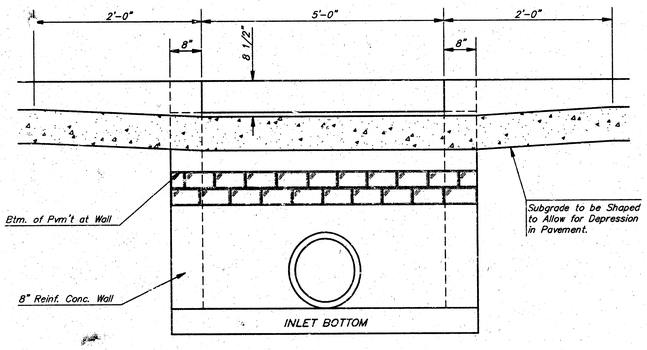

SECTION C–C

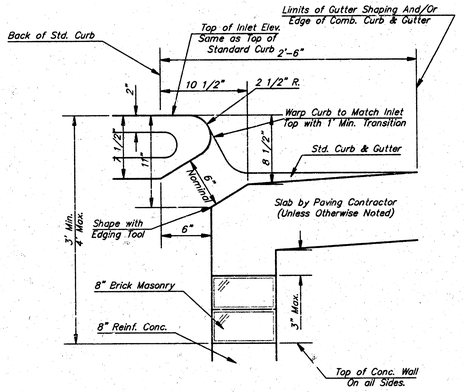

SECTION B–B

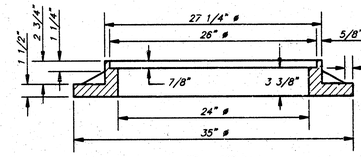

WT. = 180 lbs.

MANHOLE RING AND COVER

*See City of Wichita Standard Manhole Ring and Cover Detail Sheet for Cover Details to Be Used With Inlet Frame.

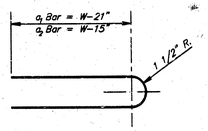

BENDING DIAGRAM

STEEL SCHEDULE

BAR		a_1	a_2	a_3	b_1 W=4'-4"	b_1 W=5'-4"	b_1 W=6'-4"	b_1 W=7'-4"	b_1 W=8'-4"	b_2	b_3	b_4	Wt. Lbs.
NUMBER		4	4	2	1	3	5	7	9	6	1	1	
SIZE		#4	#4	#4	#4	#4	#4	#4	#4	#4	#4	#6	
LENGTH	W=4'-4"	5'-7"	6'-7"	4'-0"	6'-1"	–	–	–	–	1'-9"	6'-2"	4'-8"	60±
	W=5'-4"	/'-7"	8'-7"	5'-0"	–	6'-1"	–	–	–	1'-9"	6'-2"	4'-8"	81±
	W=6'-4"	9'-7"	10'-7"	6'-0"	–	–	6'-1"	–	–	1'-9"	6'-2"	4'-8"	101±
	W=7'-4"	11'-7"	12'-7"	7'-0"	–	–	–	6'-1"	–	1'-9"	6'-2"	4'-8"	121±
	W=8'-4"	13'-7"	14'-7"	8'-0"	–	–	–	–	6'-1"	1'-9"	6'-2"	4'-8"	141±

Note: a_3 Bars to be Placed Approx. 2" Below Top of Inlet Cover.

STANDARD CURB INLET PRECAST TOPS				
W	PRE-CAST TOP SIZE		PIPE SIZE	CU. YD. CONC.
4'-4"	3'-8"	6'-4" 7 1/2"	21" & SMALLER	0.38±
5'-4"	4'-8"	6'-4" 7 1/2"	24" & 30"	0.51±
6'-4"	5'-8"	6'-4" 7 1/2"	36" & 42"	0.64±
7'-4"	6'-8"	6'-4" 7 1/2"	48" & 54"	0.77±
8'-4"	7'-8"	6'-4" 7 1/2"	60" ± 66"	0.90±

GENERAL NOTES

1. Concrete tops to be installed on thin mortar cushion to insure full support along brick walls. Concrete tops may be cast in place or precast. Concrete used for inlet construction shall be concrete pavement mix.
2. Contractor shall have the option of constructing 8" brick masonry walls between the concrete inlet base and top on this inlet when W=6'-4" and H=7'-0" or less.
3. Inlet invert shall be shaped with 8 sack sand mix concrete to create flow channels and to increase hydraulic efficiency such that the inlet will be self cleaning between all inlet and/or outlet pipes.
4. The ends of all pipes installed in inlets shall be cut off flush with the inside face of the inlet wall.

Revised – Dec. 21, 1984

CITY OF WICHITA, KANSAS

TYPE 1 CURB INLET

INLET OPENING = 6"X5'-0"

BAUGHMAN COMPANY P.A.
ENGINEERING, SURVEYING, & PLANNING
316-262-7271 • 315 ELLIS • WICHITA, KANSAS 67211

PROJECT NUMBER 788 PPS (607861) | SHEET 2 OF 3

DESIGN	DRAWN	APPROVED	DATE	SCALE
C.O.W.	STAFF		3-98	NONE

FIRESTON\STYP1-S 98-03-E012

CHADSWORTH COMMERCIAL 3RD ADDITION

WICHITA, SEDGWICK COUNTY, KANSAS

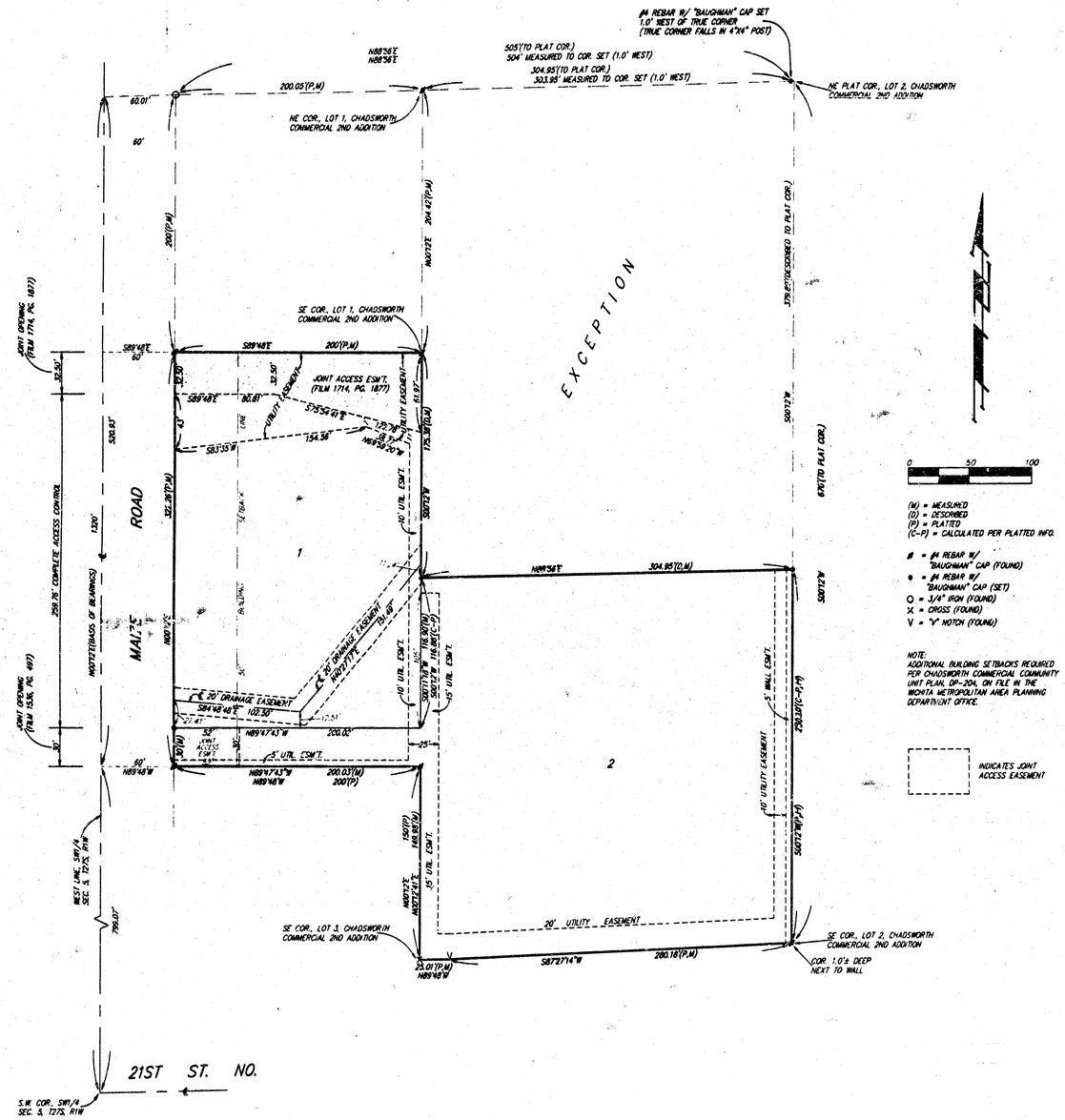

State of Kansas) SS
Sedgwick County)

We, Baughman Company, P.A., Surveyors in aforesaid county and state do hereby certify that we have surveyed and platted "CHADSWORTH COMMERCIAL 3RD ADDITION", Wichita, Sedgwick County, Kansas, and that the accompanying plat is a true and correct exhibit of the property surveyed, described as and being a replat of Lot 2, Chadsworth Commercial 2nd Addition, Wichita, Sedgwick County, Kansas, EXCEPT that part of said Lot 2 described as follows: Beginning at the SE Corner of Lot 1 in said Chadsworth Commercial 2nd Addition; thence N00°12'E along the east line of said Lot 1, 204.42 feet to the NE Corner of said Lot 1; thence N88°56'E along the north line of said Lot 2, 304.95 feet to the NE Corner of said Lot 2; thence S00°12'W along the east line of said Lot 2, 379.80 feet; thence S88°56'W parallel with the north line of said Lot 2, 304.95 feet to an intersection with the east line of said Lot 1 as extended south; thence N00°12'E along said extended east line, 175.38 feet to the point of beginning.

All being situated in the SW1/4 of Sec. 5, Twp. 27-S, R-1-W of the 6th P.M., Sedgwick County, Kansas.

Existing public easements and dedications being vacated by virtue of K.S.A. 12-512(b).

Baughman Company, P.A.

Michael G. Conrey, Surveyor

Michael G. Conrey

L.S. 7-24-98

Know all men by these presents that we, the undersigned, have caused the land described in the surveyors certificate to be platted into Lots to be known as "CHADSWORTH COMMERCIAL 3RD ADDITION", Wichita, Sedgwick County, Kansas. The utility easements are hereby granted as indicated for the construction and maintenance of all public utilities. The wall easement is hereby granted as indicated for the construction and maintenance of a private screening wall and utility main lines and service lines are allowed to cross this easement. The drainage easements are hereby granted as indicated for drainage purposes. Access controls as depicted on the face of the plat are hereby granted to the City of Wichita, Kansas. The permitted entrance locations shall be as determined by the City Engineer of the City of Wichita, Kansas.

Mesa Homes, Inc.

Larry E. Bottenberg, Vice-President

State of Kansas) SS
Sedgwick County)

The foregoing instrument acknowledged before me, this 26th day of FEBRUARY, 1998, by Larry E. Bottenberg, Vice-President of Mesa Homes, Inc., on behalf of the corporation.

Judith M. Terhune Notary Public

JUDITH M TERHUNE

My App't. Exp. 11-7-2001

JUDITH M TERHUNE
Notary Public - State of Kansas
My Appt. Expires 11-7-2001

We the undersigned, holders of a mortgage on the above described property, do hereby consent to this plat of "CHADSWORTH COMMERCIAL 3RD ADDITION", Wichita, Sedgwick County, Kansas.

Garden Plain State Bank

Kyle B. Estep, Senior Vice-President

Kyle B. Estep

State of Kansas) SS
Sedgwick County)

The foregoing instrument acknowledged before me, this 26 day of FEB, 1998, by Kyle B. Estep, Senior Vice-President of Garden Plain State Bank, on behalf of the bank.

Marilene Conrady Notary Public

MARILENE CONRADY

My App't. Exp. 7-16-2000

This plat of "CHADSWORTH COMMERCIAL 3RD ADDITION", Wichita, Sedgwick County, Kansas has been submitted to and approved by the Wichita-Sedgwick County Metropolitan Area Planning Commission, Wichita, Kansas.

Dated this 25 day of September, 1998.

Wichita-Sedgwick County Metropolitan Area Planning Commission.

John C. Frye, Chairman

John C. Frye

SEAL

Marvin S. Krout, Secretary

Marvin S. Krout

This plat approved and all dedications shown hereon accepted by the City Council of the City of Wichita, Kansas, this _____ day of _____, 1998.

Bob Knight, Mayor

Pat Burnett, City Clerk

Entered on transfer record this _____ day of _____, 1998.

James Alford, County Clerk

State of Kansas) SS
Sedgwick County)

This is to certify that this plat has been filed for record in the office of the Register of Deeds, this _____ day of _____, 1998, at _____ o'clock ___ M; and is duly recorded.

Larry Consolver, Register of Deeds

Michael D. Hurtt, Deputy

3/3

BAUGHMAN COMPANY P.A.
ENGINEERING, SURVEYING, & PLANNING
262-2221 • 315 CLIO • WICHITA, KANSAS 67211

81-40 03 81