INDEX OF SHEETS

1. TITLE SHEET
2. PLAN/PROFILE
3. 36" HEADWALL
4. TYPE 1A CURB INLET

PRIVATE STORM SEWER IMPROVEMENTS

IN

OAK KNOLL INDUSTRIAL PARK 2ND ADDITION

CITY OF WICHITA PROJECT NO. 809 PPS (607861)

BOOKED 3-22-99 MCG P-409

PROJECT SURVEY CONTROL

CITY OF WICHITA VERTICAL DATUM

BM30 : CHISELED "C" S.W. CORNER WEST CURB INLET @ S.E. CORNER ROCK ROAD AND ARNOLD

ELEV. = 1877.71 CITY DATUM

COORDINATE TABLE

	NORTHING	EASTING
PT. 371	344.3954	355.5400
PT. 376	344.3377	1677.7700
PT. 377	344.3926	420.5402
PT. 395	764.3926	419.6117
PT. 396	764.3666	1014.6132
PT. 397	864.3926	419.3906
PT. 405	864.3666	1014.3921
PT. 406	1124.3527	1303.8180
PT. 407	1124.3654	1013.8173
PT. 411	724.3926	419.7001
PT. 413	1039.8462	1374.0050
PT. 414	1040.5161	1676.9985
PT. 474	811.0357	1261.2668
PT. 476	854.8467	1374.4140
PT. 477	854.7030	1309.4142
PT. 478	919.4992	1304.2709
PT. 480	791.1123	1295.9519
PT. 481	724.3594	1180.6212
PT. 482	764.3594	1180.6230
PT. 484	784.4007	1238.2915
PT. 485	635.5163	1677.4473
PT. 486	634.8465	1374.4539
PT. 487	1039.6915	1304.0052
PT. 488	1049.3674	1013.9831
PT. 489	1049.3761	813.9826
PT. 490	864.3754	814.3916

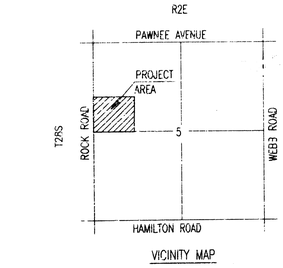

VICINITY MAP

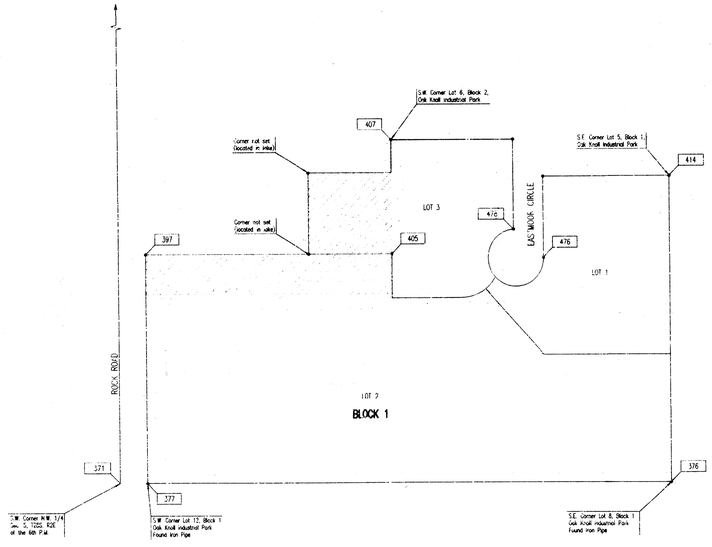

SCALE: 1" = 150'

GENERAL NOTES

UNDERGROUND UTILITY SERVICE LINES AND OVERHEAD UTILITY POLE LINES ARE TO BE ADJUSTED AS NECESSARY BY OTHERS PRIOR TO CONSTRUCTION UNLESS THE PLANS SPECIFICALLY CALL FOR THEIR ADJUSTMENT BY THE CONTRACTOR. EXISTING UTILITIES AND THEIR LOCATION, AS SHOWN ON THE PLANS, REPRESENT THE BEST INFORMATION OBTAINABLE FOR DESIGN. LOCATION INFORMATION HAS BEEN OBTAINED FROM THE VARIOUS UTILITY COMPANIES AND IS EITHER FROM COMPANY RECORD DRAWINGS OF COMPANY PROVIDED FIELD LOCATIONS. THE CONTRACTOR WILL BE REQUIRED TO WORK AROUND EXISTING UTILITIES WITHIN THE CONSTRUCTION LIMITS WHICH DO NOT CONFLICT WITH PROPOSED CONSTRUCTION.

RUBBLE FROM THE REMOVAL OF MISCELLANEOUS STRUCTURES SHALL BE DISPOSED OF ON SITES TO BE PROVIDED BY THE CONTRACTOR AND APPROVED AS NOTED BELOW

ALL DISPOSAL SITES MUST BE APPROVED BY THE KANSAS DEPARTMENT OF HEALTH AND ENVIRONMENT. MATERIAL EITHER STOCKPILED OR DISPOSED OF IN A FLOOD PLAIN WOULD REQUIRE A KANSAS STATE BOARD OF AGRICULTURE PERMIT. ANY MATERIAL DUMPED IN WATERS OF THE UNITED STATES OR WETLANDS IS SUBJECT TO U.S. CORPS OF ENGINEERS PERMITTED REGULATIONS. ANY MATERIAL BURIED OR STOCKPILED BEYOND APPROVED CONSTRUCTION LIMITS WOULD REQUIRE ADDITIONAL ARCHAEOLOGICAL INVESTIGATIONS UNLESS BURIED IN A PREVIOUSLY APPROVED BORROW LOCATION

CONTRACTOR SHALL SATISFY HIMSELF OF SURFACE AND SUBSURFACE CONDITIONS PRIOR TO BIDDING.

CONTRACTOR SHALL PROVIDE A MINIMUM FORTY-EIGHT (48) HOUR ADVANCE NOTICE (EXCLUDING WEEKENDS AND HOLIDAYS) PRIOR TO BEGINNING ANY EXCAVATION, TO KANSAS ONE-CALL SYSTEM, A UTILITY LOCATION SERVICE, AT (316) 687-2470 TO REQUEST THE FOLLOWING UTILITY COMPANIES TO LOCATE ALL EXISTING LINES WITHIN THE PROJECT AREA: PEOPLES NATURAL GAS, K.G.E. ELECTRIC, SOUTHWESTERN BELL TELEPHONE, MULTIMEDIA CABLE VISION, CITY OF WICHITA SEWER MAINTENANCE AND CITY OF WICHITA WATER DEPARTMENT.

THE CONTRACTOR SHALL BE RESPONSIBLE FOR PRESERVING PROPERTY IRONS. THE CONTRACTOR WILL BE REQUIRED TO RE-ESTABLISH ANY PROPERTY IRONS WHICH ARE DAMAGED OR DESTROYED BY HIS CONSTRUCTION OPERATIONS. SUCH IRONS SHALL BE RE-ESTABLISHED BY A LICENSED LAND SURVEYOR IN ACCORDANCE WITH STATE LAWS

THE WATER DEPARTMENT SHALL FIELD LOCATE WATER VALVES ONE TIME DURING CONSTRUCTION WHEN REQUESTED BY THE CONTRACTOR. IT SHALL BE THE CONTRACTOR'S RESPONSIBILITY TO PRESERVE SUCH FIELD LOCATIONS DURING THE CONSTRUCTION PROCESS. WATER VALVES, WATER VALVE BOXES OR FIRE HYDRANTS DAMAGED DURING CONSTRUCTION SHALL BE REPAIRED BY THE CONTRACTOR AT HIS OWN EXPENSE.

THE CONTRACTOR SHALL TEMPORARY SEED AND MULCH ALL STREET RIGHTS-OF-WAY, EASEMENTS GRADED, AND OTHER AREAS DISTURBED BY HIS OPERATIONS WITH ANNUAL RYE SEED AT THE RATE OF 4LBS./1000 S.F. AND MULCH WITH HAY AT THE RATE OF 90LBS./1000 S.F.

CONTRACTOR SHALL COORDINATE HIS WORK WITH WATER LINE CONTRACTOR (C.O.W. PROJ. NO. XXXXX, SANITARY SEWER CONTRACTOR (C.O.W. PROJ. NO. XXXXXX), AND PAVING CONTRACTOR.

MICHAEL W. BARRY LICENSED 9988 6-4-98 KANSAS PROFESSIONAL ENGINEER

MAY 1998

PLANS PREPARED BY
PROFESSIONAL ENGINEERING CONSULTANTS, P.A.
ENGINEERS
WICHITA, KANSAS

APPROVED AS NOTED
BY CITY ENGINEER OF WICHITA

SANITARY SEWERS _____

STORM SEWERS VRH 6/11/98

DRIVEWAY APPROACHES _____

WATER MAINS _____

PAVING _____

NOTE TO CONTRACTOR

INSPECTION AND TESTING FOR THIS PROJECT IS TO BE PROVIDED BY A LICENSED CONSULTING ENGINEERING FIRM UNDER CONTRACT WITH THE OWNER/DEVELOPER. SAID INSPECTION TO BE IN ACCORDANCE WITH THE CITY OF WICHITA STANDARD CONSTRUCTION ENGINEERING PRACTICES AND CERTIFIED BY A LICENSED PROFESSIONAL ENGINEER. NO WORK SHALL BE PERFORMED IN DEDICATED EASEMENTS OR PUBLIC RIGHT-OF-WAY BY THE CONTRACTOR WITHOUT SUCH INSPECTION NOR SHALL ANY WORK BE COMMENCED IN DEDICATED EASEMENTS OR PUBLIC RIGHT-OF-WAY WITHOUT WRITTEN AUTHORIZATION BY THE CITY ENGINEER.

F:\1998\98363\DWG\Sheet1.dwg, Thu Jun 04 11:31:31 1998

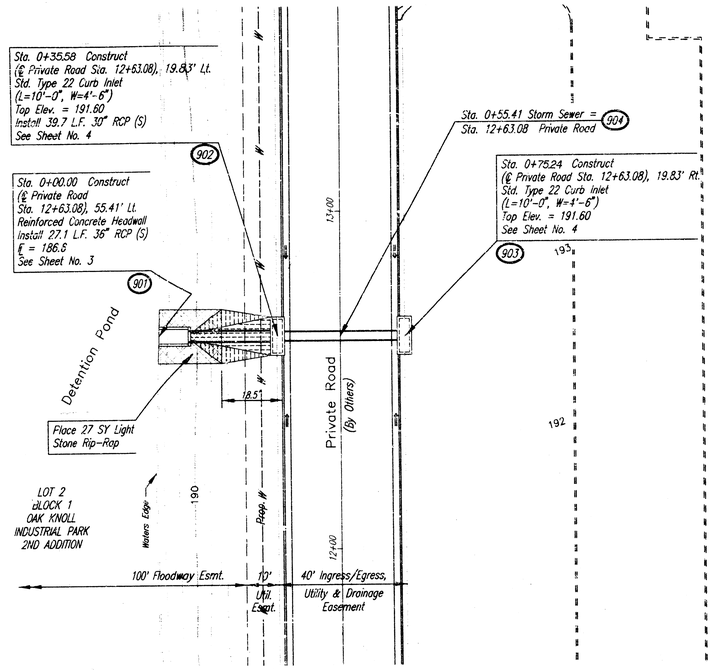

SCALE:

PLAN: LAT. & LONG. 20 0 20 40

PROFILE: HORIZ. SAME AS ABOVE

VERT.

COORDINATE TABLE

	NORTHING	EASTING
PT. 901	799.80	617.74
PT. 902	764.21	617.74
PT. 903	724.55	617.74
PT. 904	744.38	617.74

LOT 2
BLOCK 1
OAK KNOLL
INDUSTRIAL PARK
2ND ADDITION

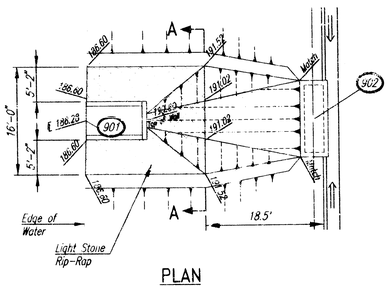

PLAN

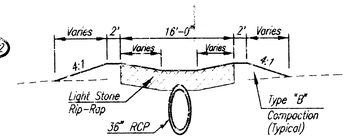

SECTION A-A

POINT #901 TO #902 DETAIL

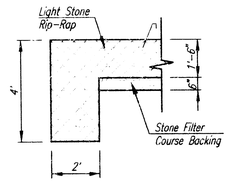

TYPICAL SECTION THRU RIP-RAP TOEWALL

Note: Toewalls shall be installed along all edges of stone rip-rap.

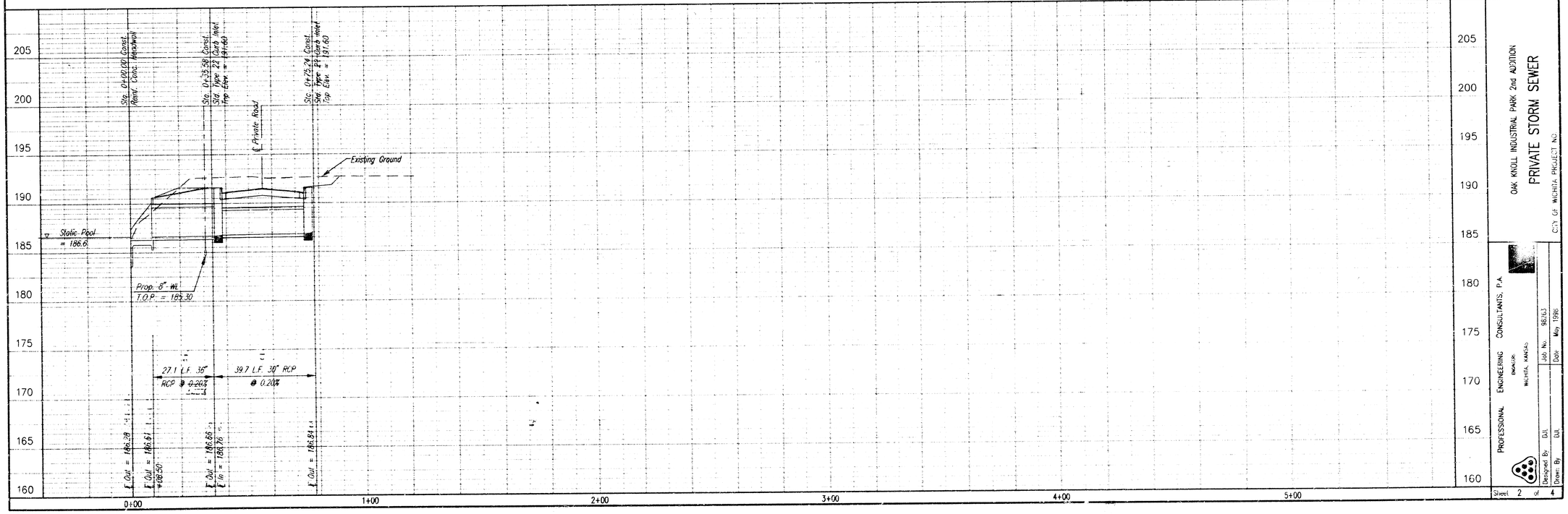

OAK KNOLL INDUSTRIAL PARK 2nd ADDITION

PRIVATE STORM SEWER

CITY OF WICHITA PROJECT NO.

PROFESSIONAL ENGINEERING CONSULTANTS, P.A.
ENGINEERS
WICHITA, KANSAS

Designed By: DJL
Drawn By: DJL
Job No. 98263
Date: May 1998

Sheet 2 of 4

PLAN | CHECKED | CHECKED | BY | DATE

PROFILE | CHECKED | CHECKED | BY | DATE

PROJECT NO.	SHEET NO.	TOTAL SHEETS
	3	4

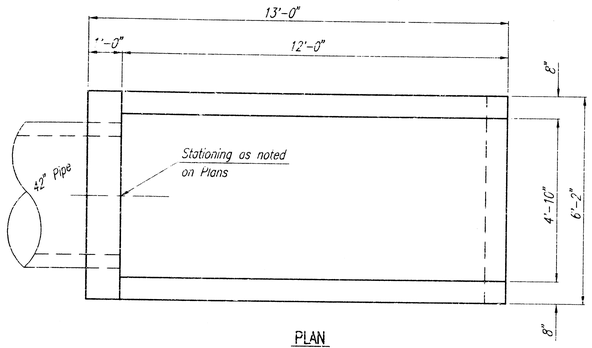

PLAN

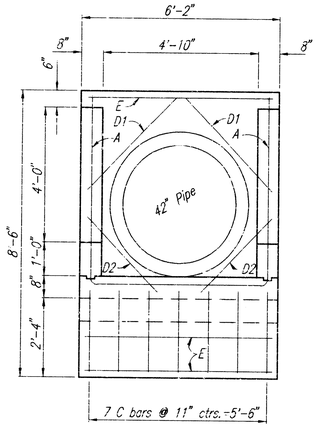

FRONT

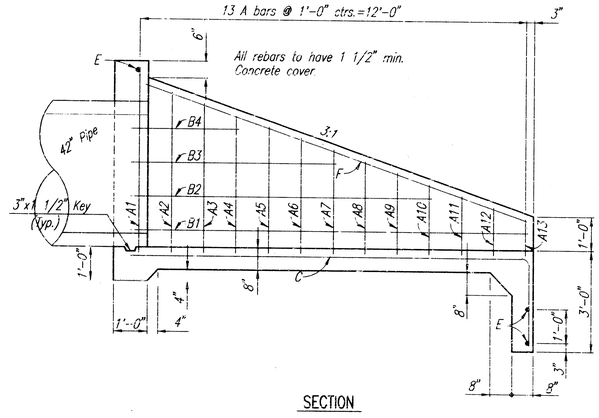

SECTION

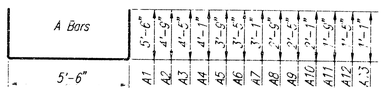

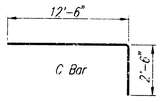

BENDING DIAGRAMS

42" HEADWALL

RE-BAR SCHEDULE ≠				
Mark	Shape	No.	Length	Weight
A1		1	16'-6"	11.02
A2		1	15'-0"	10.02
A3		1	14'-4"	9.57
A4		1	13'-8"	5.13
A5		1	13'-0"	8.68
A6		1	12'-4"	8.24
A7		1	11'-8"	7.79
A8		1	11'-0"	7.35
A9		1	10'-4"	6.90
A10		1	9'-8"	6.46
A11		1	9'-0"	6.01
A12		1	8'-4"	5.57
A13		1	7'-8"	5.12
B1		2	12'-7"	16.82
B2		2	9'-7"	12.80
B3		2	5'-7"	7.46
B4		2	3'-7"	4.79
C		7	15'-0"	70.14
D1		2	3'-8"	4.90
D2		2	2'-4"	3.12
F		3	5'-8"	11.36
F		2	13'-0"	17.37
Total Rebars			251	Lbs.
Concrete			4.98	C.Y.

All Concrete Reinforcement to be #4 bars.

≠ For Information Only

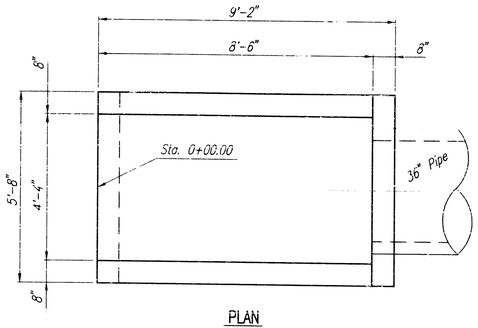

PLAN

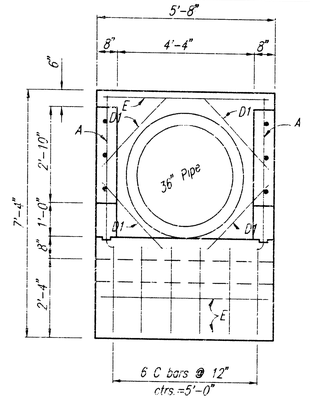

FRONT

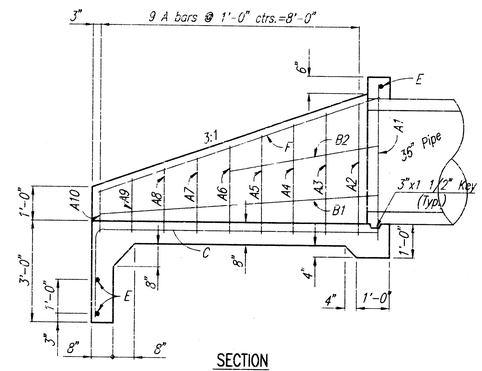

SECTION

RE-BAR SCHEDULE ≠				
Mark	Shape	No.	Length	Weight
A1		1	14'-4"	9.57
A2		1	12'-10"	8.57
A3		1	12'-2"	8.13
A4		1	11'-6"	7.68
A5		1	10'-10"	7.24
A6		1	10'-2"	6.79
A7		1	9'-6"	6.35
A8		1	8'-10"	5.90
A9		1	8'-2"	5.46
A10		1	7'-6"	5.01
B1		2	8'-8"	11.58
B2		2	4'-8"	6.24
C		6	11'-1"	44.42
D1		4	3'-0"	8.02
E		3	5'-2"	10.35
F		2	9'-0"	12.02
Total Rebars			163	Lbs.
Concrete			3.08	C.Y.

All Concrete Reinforcement to be #4 bars.

≠ For Information Only

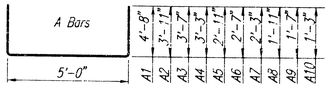

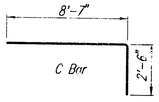

BENDING DIAGRAMS

36" HEADWALL

CONCRETE HEADWALL NOTES

Concrete: Bevel all exposed edges with a 1" triangular molding or finish with an approved edging tool. Concrete shall be as per City of Wichita Standard Specifications for concrete paving mix except that it shall have a minimum 28 day compressive strength of 4,000 p.s.i. All pipes shall be flush cut prior to being cast into the headwall.

Reinforcing Steel: All dimensions relative to reinforcing steel are to centerline of bar unless otherwise noted. All reinforcing steel shall conform to A.S.T.M. designation A615 Grade 60 and shall be epoxy coated. All clearances shall be 2" unless other noted.

~~Payment: A deduction in concrete quantities has been made for the pipe opening. The "Headwalls (36")(Reinforced Concrete)", and "Headwall (42")(Reinforced Concrete)", shall be paid for at the unit price bid per each in place including concrete, reinforcing steel excavation and all other miscellaneous materials, labor, tools, equipment, and incidentals necessary to complete the work.~~ Quantities shown are for information only.

OAK KNOLL INDUSTRIAL PARK 2ND ADDITION

36" AND 42" HEADWALL DETAILS

PROFESSIONAL ENGINEERING CONSULTANTS, P.A.
ENGINEERS
WICHITA, KANSAS

Designed by	BER, GDD	Checked by	
Drawn by	DFP	Date June 04, 1998	Job No 98263

F:\1998\98263\Dwg\acad\Hdwls-4.dwg Thu Jun 04 07:15:15 1998

FHWA REGION NO.	STATE	PROJECT NO.	YEAR	SHEET NO.	TOTAL SHEETS
7	KANSAS		1998	4	4

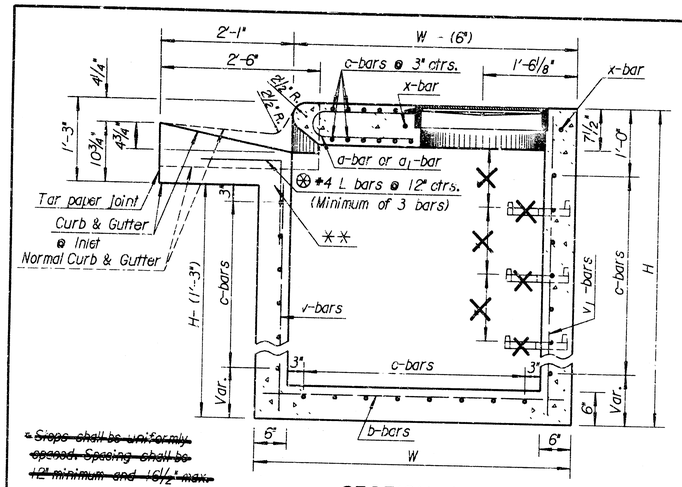

SECTION A-A

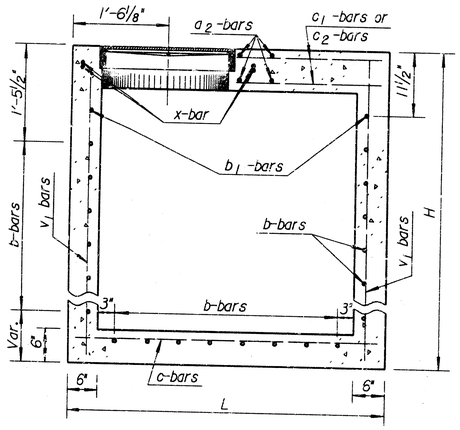

SECTION B-B

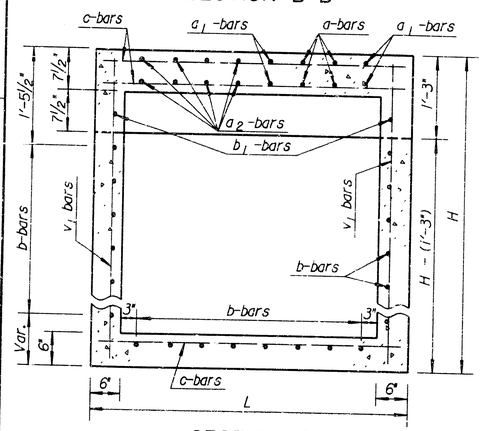

SECTION C-C

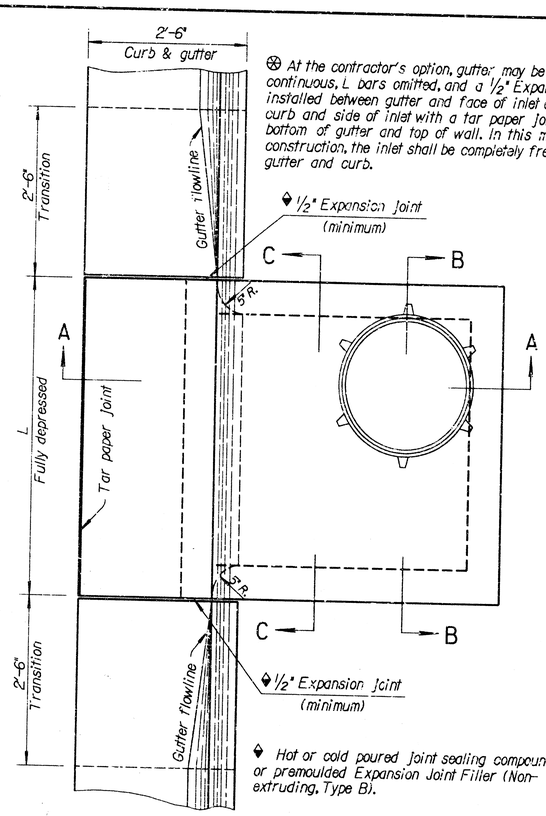

PLAN

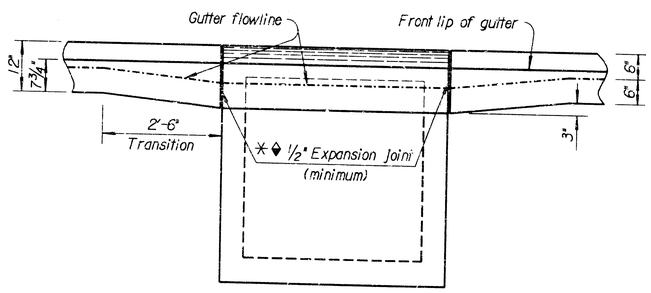

ELEVATION

Note: Transition gutter from normal depth of 6" to 9" at inlet in 2'-6". Curb and Gutter sections shall be shaped as shown where required by the installation of curb inlets. This work will be subsidiary to other bid items.

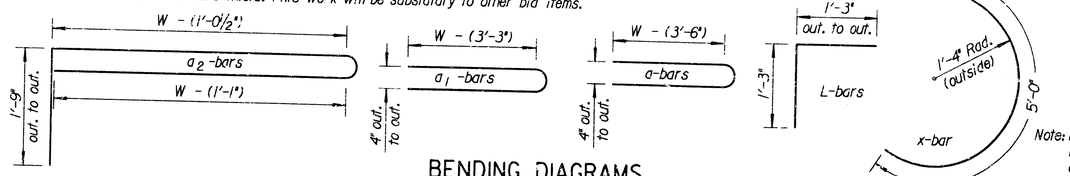

BENDING DIAGRAMS

Note: Reinforcing steel for L bars is not included in the steel quantity and is subsidiary to the other inlet items.

GENERAL NOTES

Use Class A Concrete throughout. All exposed edges shall be finished with an edging tool.
At the contractors option Class A Concrete (AE) or mix used in concrete pavement may be used throughout.
In general, pipes will enter and leave manhole at various positions. Where possible bend bars around pipes.
Floor of manhole to be shaped as shown in various "EXAMPLES" with unreinforced Class "A" Concrete.
Manhole opening ~~and steps, where used~~, shall be placed to afford easy access to top of shaped invert. Top reinforcing bars to be adjusted accordingly.
All castings shall be gray iron and shall comply with the KDOT Standard Specifications.
When so ordered by the Engineer, the top of the manhole shall be sloped slightly to approximately fit the ground line or other conditions.
Dimensions and weights of cast iron as shown on this sheet are minimum. Larger dimensions and/or heavier weights of cast iron may be used.
~~Steps shall be installed in all storm sewer inlets when specified in the plans or when "H" is equal to or greater than Six feet. Steps shall comply with the KDOT Standard Specification.~~
No reduction in concrete quantities shall be made for pipe openings.
When directed by the Engineer, a small opening in the back of the inlet shall be provided in order to drain a low area. Reinforcing bars shall extend through the opening. No reduction in concrete quantities will be made for this opening.
No addition in concrete quantities shall be made for shaping floor of inlet.
No reduction in pay length of curb, gutter, or curb & gutter will be made through the inlet area.
The weight of castings includes no allowance for fillets and overruns.
Curb and Gutter sections shall be shaped as shown where required by the installation of curb inlets. This work shall be subsidiary to other bid items.
~~See sheet entitled "Reinforcing Steel for Inlets and Manholes" for details and quantities.~~
For additional notes and details on Light Type Cast Iron Manhole Cover and Ring Type C and Cast Iron Steps, see Standard Drawing RD633 "Reinforced Concrete Manhole".
All reinforcing steel shall be #4 at 6" centers except where noted. Minimum clear distance to reinforcement shall be 1 1/2".

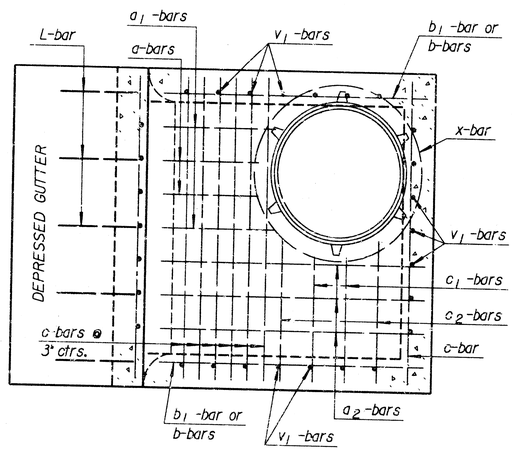

Reinforcing Steel Top View

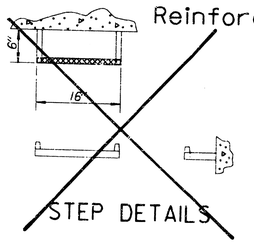

STEP DETAILS

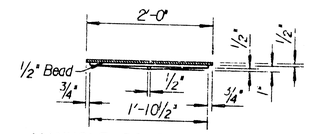

MANHOLE COVER TYPE C
(Weight= 64 lbs.)

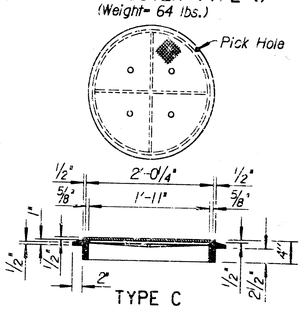

TYPE C

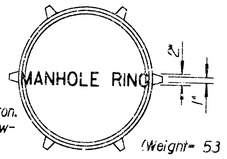

NOTE: All manhole castings are cast iron. Weight of castings includes no allowance for fillets and overruns.

(Weight= 53 lbs.)

*LIGHT TYPE
MANHOLE COVER & RING

*Rings with four equally spaced lugs will be permitted.

NO.	DATE	REVISIONS	BY	APP'D
5	12-11-97	Revised step spacing	R.J.S.	J.O.B.
4	3-20-96	Added reinforcement note	R.J.S.	J.O.B.
3	12-8-94	Added misc. notes	R.J.S.	J.O.B.

KANSAS DEPARTMENT OF TRANSPORTATION

TYPE 22
CURB INLET

~~RD646~~

FHWA APPROVAL	2-2-98	APP'D. James C. Brewer	
DESIGNED	DETAILED	QUANTITIES	TRACED Bowser
DESIGN CK.	DETAIL CK.	QUANTCK.	TRACE CK. Seitz

Drawn By: $$USERNAME$$ Plotted: $$$$STIME$$$$$$
File: $$$$$$$