GENERAL NOTES

1. Rubble from the removal of miscellaneous structures and excess excavation which is to be wasted shall be disposed of on sites to be provided by the Contractor. These sites shall be approved by the Engineer as to suitability, appearance and site location. Locations that, in the opinion of the Engineer, will leave an unsightly appearance will not be approved.

2. All disposal sites must be approved by the Kansas Department of Health and Environment. Material either stockpiled or disposed of in a flood plain would require a Kansas State Board of Agriculture permit. Any material dumped in waters of the United States or wetlands is subject to U.S. Corps permitting regulations. Any material buried or stockpiled beyond approved of Engineers construction limits would require additional archeological investigations unless buried in a previously approved borrow location.

3. The Contractor shall notify pipeline companies at least 24 hours in advance of any work being performed across and/or adjacent to pipelines.

4. Trees and shrubs in public right-of-way which are in direct conflict with proposed new construction shall be removed by the Contractor with the Engineer's approval. Trees and shrubs which are not in direct conflict with proposed new construction shall be saved and protected from damage.

5. The Contractor shall give all property owners and/or tenants of developed property directly abutting the construction of this project a minimum of ten (10) days advance notice prior to start of construction.

6. The Contractor shall be responsible for preserving property irons. The Contractor will be required to re-establish any property irons which are damaged or destroyed by his construction operations. Such irons shall be re-established by a licensed land surveyor in accordance with state laws.

7. Contractor will be required to provide a minimum advance notice of twenty-four (24) hours to utility companies prior to starting any excavation as follows:

   Kansas One-Call 687-2470

8. The Contractor must notify the following in case of an emergency:

Cablevision	262-4270 or 263-2061
Kansas Gas Service	383-8650
K.G.&E.	383-8600
Peoples Natural Gas Company	942-8350 or 263-8161
Southwestern Bell Telephone Company	1-511-2611
City of Wichita Water Department	268-4908
City of Wichita Sewer Maintenance	268-4071

9. The excavated portion of the levee must be reconstructed using similar materials and compacted to at least 95 percent of Standard Proctor Density.

10. The portion of the trench for the storm water drainage pipe under the levee must be backfilled with impervious soil and compacted to at least 95 percent of Standard Proctor Density.

11. All disturbed areas must be graded, seeded with Fescue Blend Grass at a rate of 300 lbs/acre, and mulched to prevent erosion.

STORM WATER SEWER
TO SERVE
R.L. HAYES 2ND ADDITION
PROJECT NO. 821-PPS
INDEX CODE 607861

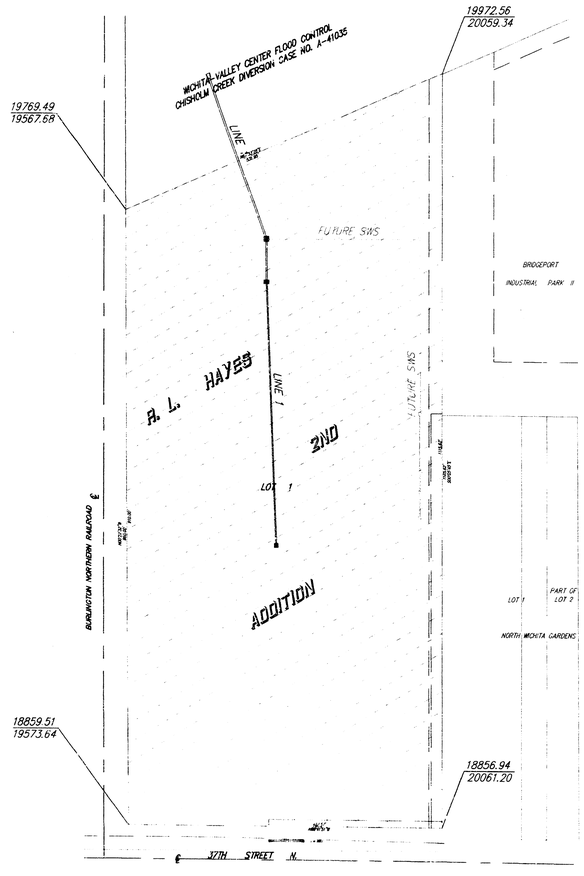

Scale: 1" = 100'

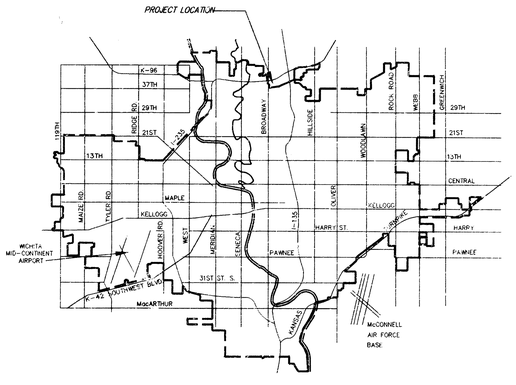

VICINITY MAP

IMPROVEMENT DISTRICT

CITY OF WICHITA, KANSAS
MICHAEL E. LINDEBAK, P.E. - CITY ENGINEER

BENCH MARKS

BENCHMARKS:
City of Wichita Bench Mark. Conc. base for Railroad Signal, south side 37th St. N. 19.6' south of ctr line 37th St. and 13.6' west of west rail of R.R.
ELEV. = 1324.16 (NGVD)

Top of iron in thimble at S.E. Corner SW1/4
ELEV. = 1323.90 (NGVD)

INDEX OF SHEETS

1. TITLE SHEET
2-3. LINE 1 - PLAN & PROFILE
4. HEADWALL DETAILS
5. RCMH DETAILS
6. DROP INLET DETAILS
7. PLAT COPY

BOOKED
3-19-99
MCG
D-417

APPROVED AS NOTED
BY CITY ENGINEER OF WICHITA

Storm Sewers VRH 9/8/98

NOTE TO CONTRACTORS

Inspection and testing for this project are to be provided by a Licensed Consulting Engineering Firm under contract with the Owner/Developer. Said inspection to be in accordance with the City of Wichita standard construction engineering practices and certified by a Licensed Professional Engineer. No work shall be performed in dedicated easements or public right-of-way by the Contractor without such inspection, nor shall any work be commenced without written authorization by the City Engineer.

9-8-98

AS-BUILT 10-27-98

SRB 924 NORTH MAIN WICHITA, KANSAS 67203 316-264-6008 FAX 264-4621
SAVOY, RUGGLES & BOHM, P. A.
ENGINEERING & SURVEYING

962E

BENCHMARKS:
City of Wichita Bench Mark. Conc. base for Railroad Signal, south side 37th St. N. 19.6' south of ctr line 37th St. and 13.6' west of west rail of R.R.
ELEV. = 1324.16 (NGVD)

Top of iron in thimble at S.E. Corner SW1/4
ELEV. = 1323.90 (NGVD)

REMOVE FENCE AS NECESSARY TO CONSTRUCT TEMPORARY DIKE AND STORM SEWER.

REMOVE TREES AS NECESSARY TO CONSTRUCT TEMPORARY DIKE.

PROPERTY LINE

20" TREE

TEMPORARY DIKE

8" TREE

IRON

FLOOD CONTROL LEVEE

WICHITA-VALLEY CENTER FLOOD CONTROL
CHISHOLM CREEK DIVERSION CASE NO. A-41035

STA. 0+00
CONST. STD. HEADWALL W/ FLAPGATE (HYDRO-SEAL H-50 OR APPROVED EQUAL). 1315.16
FLOW = ~~1315.08~~ 1315.59
FLOW OUT (30") = ~~1315.51~~

INSTALL 29 S.Y. HEAVY STONE RIP-RAP PER CITY OF WICHITA STANDARDS

5.00'
10.00'
30.00'

19970.71 (N)
19695.30 (E)

LINE 1

8" TREE

NOTE: TEMPORARY DIKE SHOWN ON THE EAST SIDE OF STORM SEWER ONLY. DIKE SHALL BE CONSTRUCTED ON THE WEST SIDE IN THE SAME MANNER TO PROTECT PROPERTY FROM FLOOD WATERS.

CONSTUCT TEMPORARY DIKE PRIOR TO ANY TRENCHING FROM STA. 0+00 TO 1+20. DIKE TO REMAIN UNTIL PIPE, HEADWALL, FLAP GATE, AND BACKFILL ARE COMPLETED (SEE DETAIL, SHEET 3 OF 7). CONTRACTOR MAY USE INTER-LOCKING STEEL SHEET PILING IN PLACE OF TEMPORARY DIKE.

EXCAVATE EXISTING LEVEE WITH 3:1 CUT SLOPES. THE TOE OF THE LEVEE CUT SHALL BE A MIN. OF 20 FEET (MEASURED HORZ.) FROM THE TOP EDGE OF THE EXCAVATION.

STA. ~~2+60.00~~ 2+63.87
CONST. REINFORCE CONCRETE MANHOLE W/BEEHIVE INLET
TOP = ~~1323.00~~ 1323.41
FLOW (30") = ~~1316.04~~ 1316.66
FLOW IN (24") = ~~1317.20~~ 1317.51
24" STUB (E) = ~~1317.20~~ 1317.30

19727.02 (N)
19785.92 (E)

71°9'1"

STA. ~~3+23.60~~ 3+27.55
CONST. STD. 2'x4' DROP INLET 1322.32
TOP = ~~1322.50~~ 1317.55
FLOW OUT (24") = ~~1317.33~~
FLOW IN (18") = ~~1317.83~~
1318.00

R.L. HAYES 2ND ADDITION

178°35'37"
~~178°39'34"~~

LINE 1

89°30'8"

~~180°24'26"~~
180°39'9"

~~19693.41 (N)~~
~~19786.42 (E)~~

156.69', 12" PVC

Proposed Pavement

Proposed 8" Water Line

Proposed Building

SRB

SCALE: 1"=20' HORZ. (PLAN & PROFILE)
1"= 5' VERT. (PROFILE)

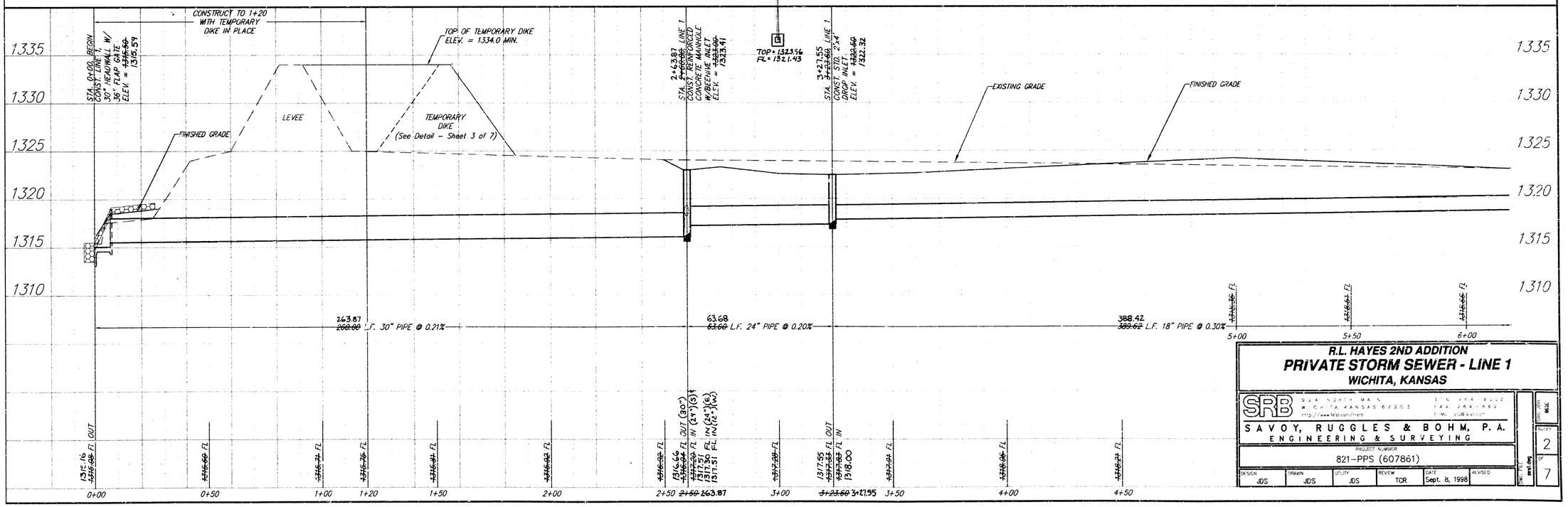

R.L. HAYES 2ND ADDITION
PRIVATE STORM SEWER - LINE 1
WICHITA, KANSAS

SRB
SAVOY, RUGGLES & BOHM, P. A.
ENGINEERING & SURVEYING
PROJECT NUMBER
821-PPS (607861)

DESIGN	DRAWN	UTILITY	REVIEW	DATE	REVISED
JDS	JDS	JDS	TCR	Sept. 8, 1998	

SHEET NO. 2
OF 7

BENCHMARKS:
City of Wichita Bench Mark. Conc. base for Railroad Signal, south side 37th St. N. 19.6' south of ctr line 37th St. and 13.6' west of west rail of R.R.
ELEV. = 1324.16 (NGVD)

Top of iron in thimble at S.E. Corner SW1/4
ELEV. = 1323.90 (NGVD)

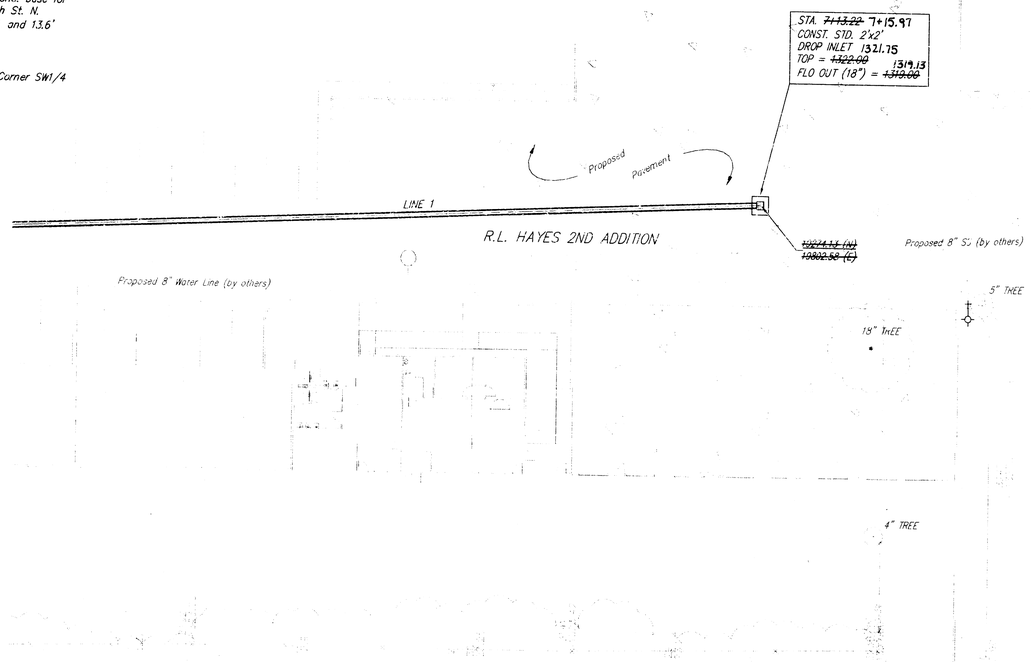

SCALE: 1"=20' HORZ. (PLAN & PROFILE)
1"= 5' VERT. (PROFILE)

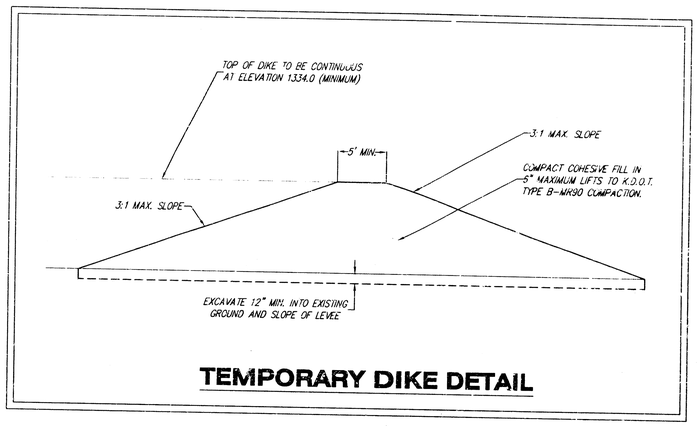

TEMPORARY DIKE DETAIL

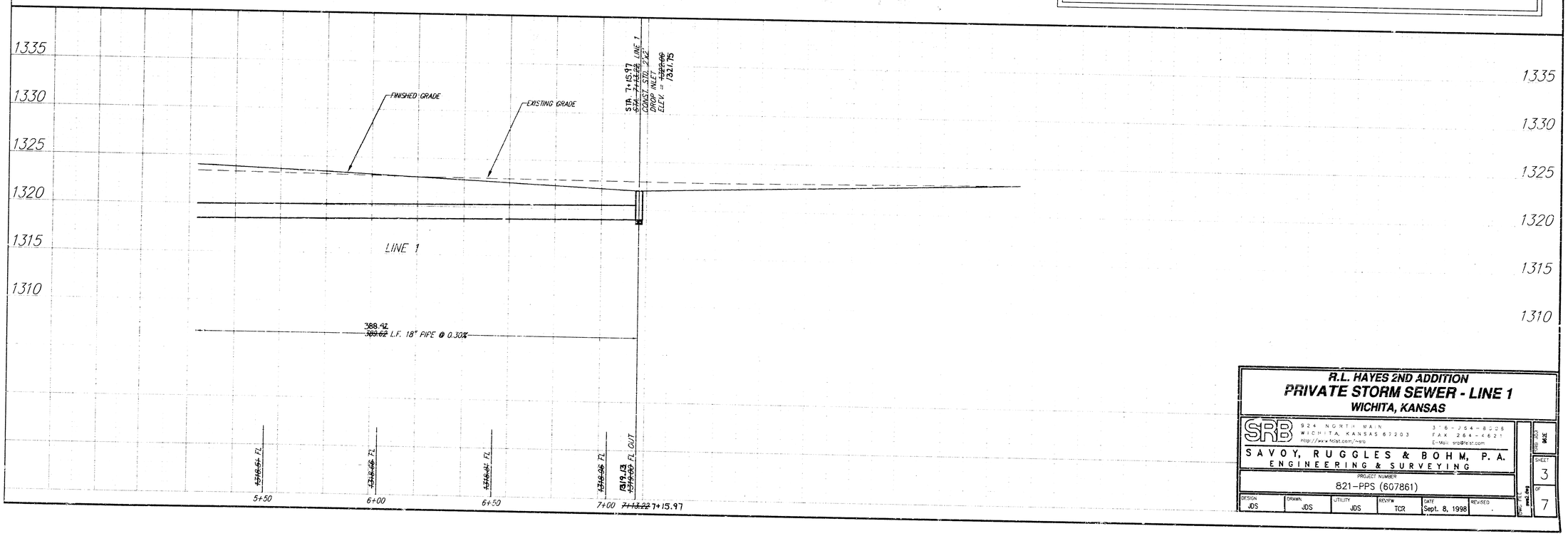

R.L. HAYES 2ND ADDITION
PRIVATE STORM SEWER - LINE 1
WICHITA, KANSAS

SRB
924 NORTH MAIN
WICHITA, KANSAS 67203
http://www.feist.com/~srb
316-264-8008
FAX 264-4621
E-Mail: srb@feist.com

SAVOY, RUGGLES & BOHM, P. A.
ENGINEERING & SURVEYING

PROJECT NUMBER
821-PPS (607861)

DESIGN	DRAWN	UTILITY	REVIEW	DATE	REVISED
JDS	JDS	JDS	TCR	Sept. 8, 1998	

DWG. FILE: swd2.dwg
SHEET 3 OF 7

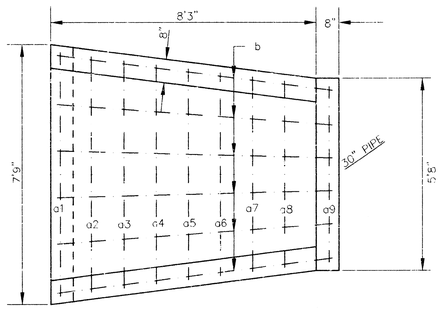

All exposed edges to have 1/2" bevel

PLAN

TABLE OF QUANTITIES				
BAR	NUMBER	LENGTH	SHAPE	WEIGHT
a1	1	8'7"		5.73
a2	1	9'0"		6.01
a3	1	9'7"		6.40
a4	1	10'0"		6.68
a5	1	10'5"		6.96
a6	1	10'10"		7.24
a7	1	11'3"		7.52
a8	1	11'10"		7.90
a9	1	15'0"		10.02
b	6	10'4"		41.42
c	2	7'0"		9.35
d	2	9'0"		12.02
e	4	5'4"		14.25
f	2	8'5"		11.24
g	2	4'7"		6.12
h1	4	1'6"		4.01
h2	4	10"		2.23
j	4	3'0"		8.02
k	6	2'6"		10.02
Total Rebar, lbs				183.14
Concrete, C.Y.				3.3

All rebars to be #4.

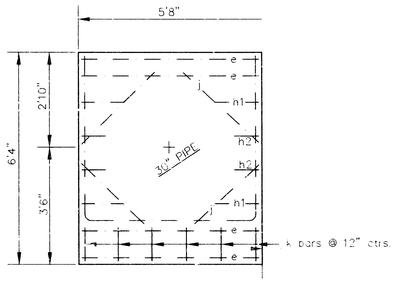

A-A SECTION

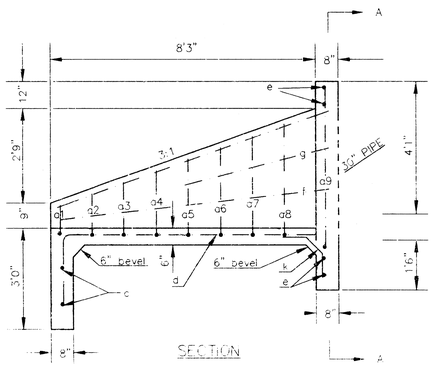

SECTION

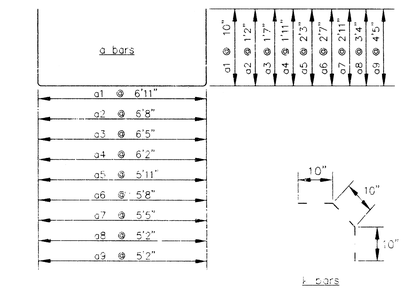

k bars

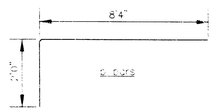

e bars

HEADWALL FOR 30" PIPE w/ FLAP GATE

R.L. HAYES 2ND ADDITION

Headwall Detail for 30" Pipe w/ Flap Gate

WICHITA, KANSAS

SRB
824 NORTH MAIN
WICHITA, KANSAS 67203
PHONE 264-8226
FAX 264-4811
http://www.feasc.com/srb
E-mail: srb@feasc.com

SAVOY, RUGGLES & BOHM, P.A.
ENGINEERING & SURVEYING

PROJECT NUMBER: 821-PPS (607861)

DESIGN	DRAWN	UTILITY	REVIEW	DATE	REVISED
JDS	JDS		TOR	Sept. 8, 1998	

Plot Date: Headwall.dwg

Print Date: 9/8/98

SHEET 4 OF 7

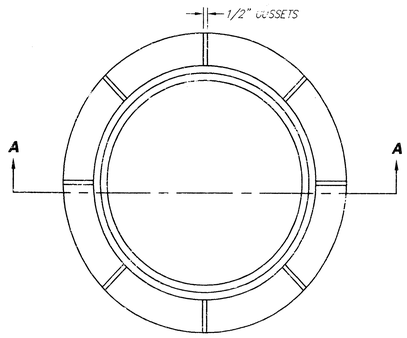

PLAN

*STANDARD MANHOLE FRAME SHOWN

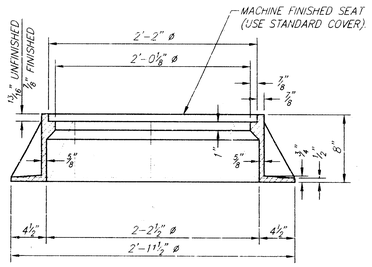

SECTION A-A
STANDARD MANHOLE FRAME

WEIGHT = 240 LBS.

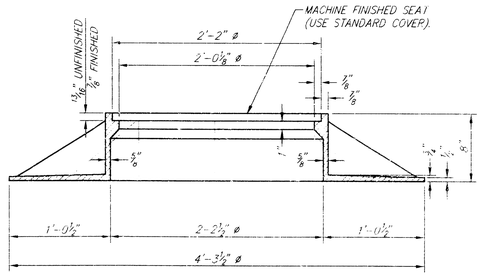

SECTION A-A
WIDE FLANGE MANHOLE FRAME

WEIGHT = 705 LBS.

CITY OF WICHITA STANDARD MANHOLE FRAME DETAILS

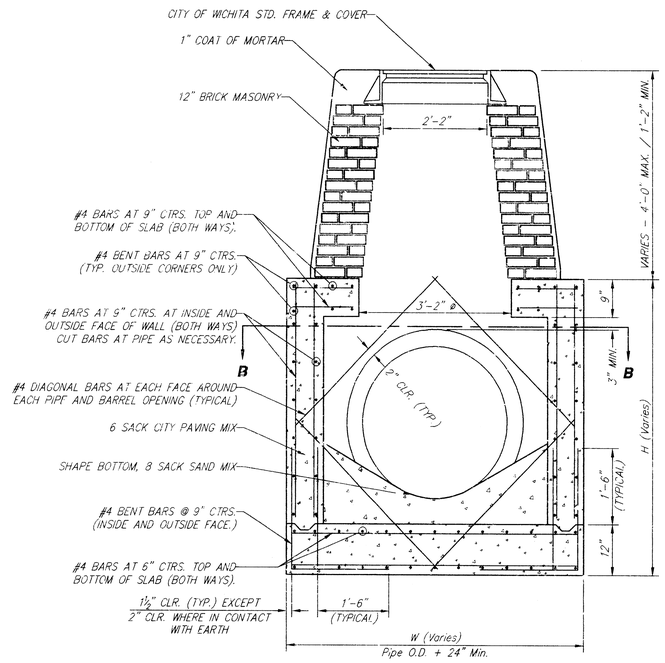

REINFORCED CONCRETE MANHOLE
STACK HEIGHT 2'-4" TO 4'-0"

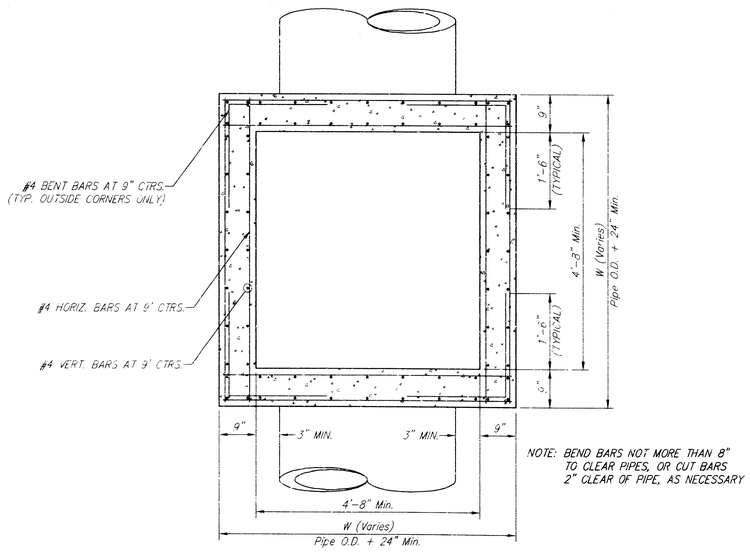

NOTE: BEND BARS NOT MORE THAN 8" TO CLEAR PIPES, OR CUT BARS 2" CLEAR OF PIPE, AS NECESSARY

SECTION B-B

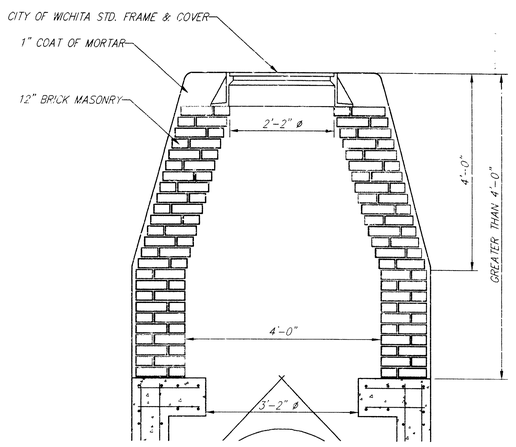

STACK HEIGHT GREATER THAN 4'-0"

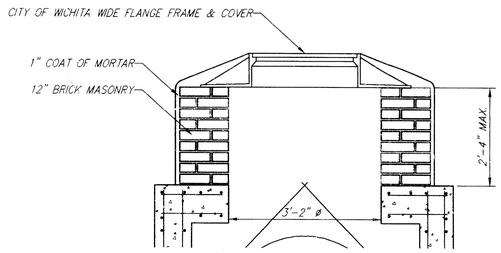

STACK HEIGHT LESS THAN 2'-4"

GENERAL NOTES:

1. MORTAR USED IN MASONRY CONSTRUCTION SHALL CONTAIN 8 SACKS OF CEMENT PER CUBIC YARD. CONCRETE USED IN MANHOLE WALLS AND BASES SHALL CONFORM TO THE REQUIREMENTS FOR CONCRETE PAVEMENT CONSTRUCTION AS SPECIFIED IN THE CITY STANDARD PAVING SPECIFICATIONS, USING CITY CONCRETE PAVEMENT MIX WITHOUT AIR ENTRAINING ADMIXTURE. MORTAR SHALL BE PLACED AROUND THE MANHOLE RING AS SHOWN ON THE DRAWINGS WHEN MANHOLES ARE CONSTRUCTED IN UNPAVED AREAS. COMPLETED MANHOLE SHALL BE WITHOUT LEAKS AND WATER TIGHT.
2. THE FLOORS OF ALL MANHOLES SHALL BE SHAPED WITH FLOW CHANNELS SUCH THAT THE MANHOLES WILL BE SELF-CLEANING, USING 8 SACK SAND MIX CONCRETE. FLOW CHANNELS SHALL BE FORMED TO MATCH THE BOTTOM HALVES OF THE INFLOWING PIPES AND THE OUTFLOWING PIPE. MANHOLE FLOORS SHALL HAVE SLOPES OF 3 INCHES PER FOOT IN THE AREAS OUTSIDE OF THE FLOW CHANNELS, SLOPED TOWARD THE FLOW CHANNELS.
3. MANHOLE COVER CASTINGS AND MANHOLE FRAME CASTINGS SHALL CONFORM TO THE REQUIREMENTS AS INDICATED IN THE STANDARD SPECIFICATIONS AND AS SHOWN IN THE STANDARD DETAIL DRAWING.
4. THE ENDS OF ALL PIPES IN MANHOLES SHALL BE CUT OFF FLUSH WITH THE INSIDE FACE OF MANHOLE WALL.

REINFORCED CONCRETE MANHOLE DETAILS
WICHITA, KANSAS

SRB
924 NORTH MAIN
WICHITA, KANSAS 67203
http://www.feist.com/~srb
316-264-8008
FAX 264-4627
E-mail: srb@feist.com
SAVOY, RUGGLES & BOHM, P.A.
ENGINEERING & SURVEYING

PROJECT NUMBER
821-PPS (607861)

DESIGN	DRAWN	UTILITY	REVIEW	DATE	REVISED
C.O.W.	J. Lang				

1997 Standard Concrete Manhole

PAGE 7035 7036

SHEET 5 OF 7

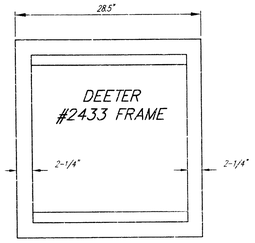



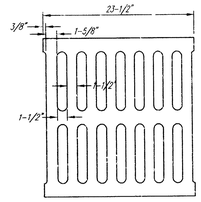

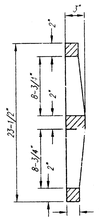

DEETER #2433 GRATE

NOTE: Grates shall be imprinted on the top surface with "CITY OF WICHITA" using letters at least 1" in height. Other marking methods may be approved by the engineer.

24" x 24" Frame and Grate Detail

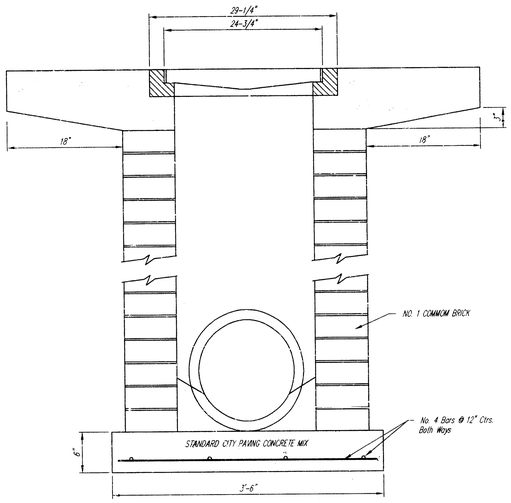

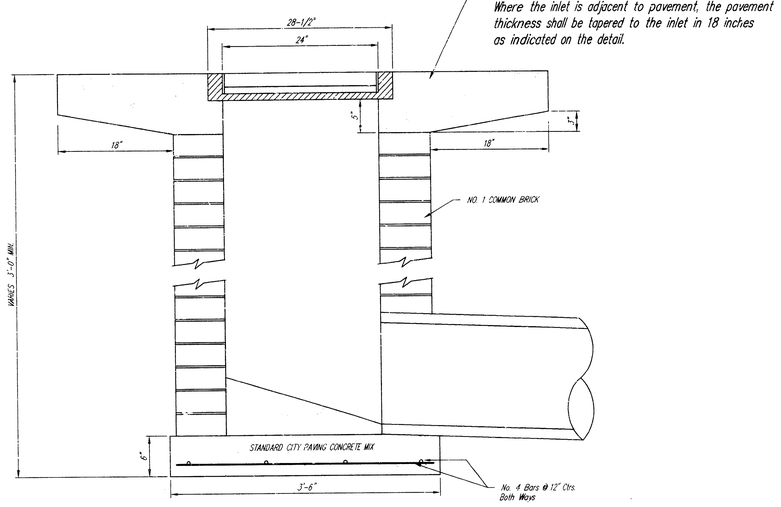

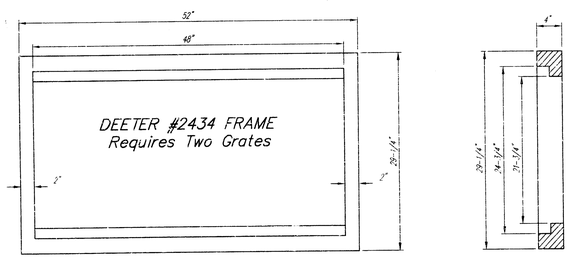

Double 24" x 24" Frame Detail

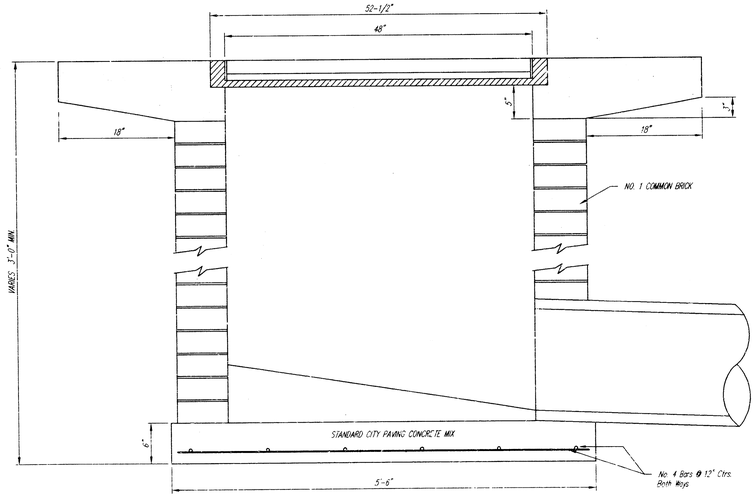

THE CITY OF WICHITA

CITY ENGINEER'S OFFICE
CITY HALL – SEVENTH FLOOR
455 NORTH MAIN STREET
WICHITA, KANSAS 67202
(316) 268-4501
(316) 268-4114 FAX

DROP INLET
2'x2' / 2'x4'

M. E. LINDEBAK P.E. – CITY ENGINEER

PROJECT NUMBER	INDEX CODE
821-PPS	807861

DATE MAR 96

SHEET 6 OF 7

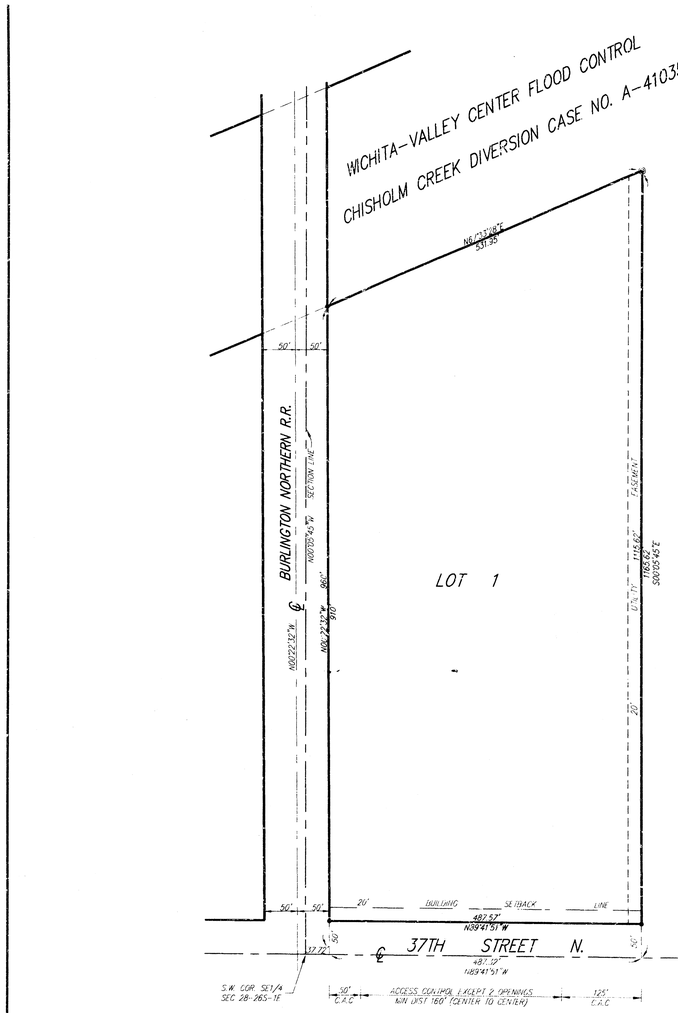



R. L. HAYES 2ND ADDITION

WICHITA, SEDGWICK COUNTY, KANSAS

State of Kansas)
Sedgwick County) SS

We, Savoy, Ruggles & Bohm, P.A., Surveyors in aforesaid county and state do hereby certify that, under the supervision of the undersigned, we have surveyed and platted "R. L. HAYES 2ND ADDITION", Wichita, Sedgwick County, Kansas and that the accompanying plat is a true and correct exhibit of the property surveyed, described as follows:

Beginning at a point in the South line and 37.72 feet East of the S.W. corner of the SE1/4 of Section 28, Township 26 South, Range 1 East of the 6th P.M., Sedgwick County, Kansas, said point being in the east Right-of-way line of the Burlington Northern Railroad; thence North along said East Right-of-way line, a distance of 960 feet to a point in the southerly line of the Wichita-Valley Center Flood Control Right-of- way, as condemned in Case No. A-41035; thence Northeasterly along the south line of said Right-of-way, a distance of 531.95 feet more or less, to a point in the east line of the west 32.0 acres of the SE1/4 of said Section 28; thence south along the east line of the west 32.0 acres of said SE1/4, a distance of 1165.62 feet to a point in the south line of said SE1/4; thence west 487.32 feet to the point of beginning.

Existing Public easements and dedications being vacated by virtue of K.S.A. 12-512(b).

Savoy, Ruggles & Bohm, P.A.

Date _____

_____ Surveyor
Mark A. Savoy P.L.S #788

This plat of "R. L. HAYES 2ND ADDITION", Wichita, Sedgwick County, Kansas, has been submitted to and approved by the Wichita-Sedgwick County Metropolitan Area Planning Commission, Wichita, Kansas.

Dated this ____ day of _____, 1998.

Wichita-Sedgwick County Metropolitan Area Planning Commission

_____ Chairman
Richard E. Lopez

_____ Secretary
Marvin S. Krout

This plat approved and all dedications shown hereon, accepted by the City Council of the City of Wichita, Kansas, this ____ day of _____, 1998.

_____ Mayor
Bob Knight

_____ City Clerk
Pat Burnett

Know all men by these presents that we, the undersigned have caused the land described in the surveyor's certificate to be platted into a Lot to be known as "R. L. HAYES 2ND ADDITION", Wichita, Sedgwick County, Kansas. The utility easements are hereby granted as indicated for the construction and maintenance of all public utilities. Access Controls are hereby granted to the City of Wichita (as indicated on the face of the plat), with the location of openings to be approved by the City Engineer.

Robert L. Hayes, Trustee of the Robert L. Hayes Revocable Trust, Dated April 23, 1992

_____
Robert L. Hayes

State of Kansas)
Sedgwick County) SS

The foregoing instrument acknowledged before me, this _____ day of _____1998, by Robert L. Hayes, Trustee of the Robert L. Hayes Revocable Trust, Dated April 23, 1992.

_____ Notary Public

My App't. Exp. _____

Entered on transfer record this ____ day of _____, 1998.

_____ County Clerk
James Alford

State of Kansas)
Sedgwick County) SS

This is to certify that this plat has been filed for record in the office of the Register of Deeds, this ____ day of _____, 1998, at _____ o'clock __ M. and is duly recorded.

_____ Register of Deeds
Bill Meek

_____ Deputy
Linda Kizzire

We, the undersigned, holders of a mortgage on the above described property do hereby consent to this plat of "R. L. HAYES 2ND ADDITION", Wichita, Sedgwick County, Kansas.

NationsBank N.A.

_____, _____

State of Kansas)
Sedgwick County) SS

The foregoing instrument acknowledged before me, this _____ day of _____1998, by _____, _____ of NationsBank N.A., on behalf of the bank.

_____ Notary Public

My App't. Exp. _____

DWG FILE: 0100PP-R.C.
PROJECT NO. 98010101P

SRB 924 NORTH MAIN
WICHITA, KANSAS 67203
http://www.feist.com/~srb
316-264-8008
FAX 316-264-8061
SAVOY, RUGGLES & BOHM, P.A.
ENGINEERING & SURVEYING

10 04 05 S1