STORM WATER SEWER IMPROVEMENTS
TO SERVE
RIVERSIDE HEALTH SYSTEM

Private Project Number
325 PPS (607861)

CITY OF WICHITA, KANSAS

Michael E. Lindebak, P.E. City Engineer

SEPTEMBER, 1998

GENERAL NOTES:

1. Contractor will be required to provide notice to utility companies a minimum of twenty-four (24) hours prior to any excavation, as follows:

   Kansas One-Call 687-2470

   The Contractor must notify the following in case of an emergency:

Cablevision	262-0561
or	263-2061
K.P.L. Gas Service Company	263-7511
Kansas Gas & Electric Company	264-1141
Southwestern Bell Telephone Company	1-800-344-7233
City of Wichita Water Department	268-4908
City of Wichita Sewer Maintenance	268-4071

2. Underground utility service lines and overhead utility pole lines are to be adjusted as necessary by others prior to construction unless the plans specifically call for their adjustment by the Contractor or unless the plans specifically identify a utility to be adjusted by its owner during construction. Existing utilities and their location, as shown on the plans, represent the best information obtainable for design. The Contractor will be required to work around existing utilities within the right-of-way which do not conflict with proposed construction.

3. All areas disturbed by construction operations shall by seeded with rye grass at a rate of 300 lbs/acre immediately following construction in that area. Ground shall be prepared per City of Wichita specifications prior to seeding.

4. Trees and shrubs in public right-of-way which are in direct conflict with proposed new construction shall be removed by the Contractor with the Engineer's approval. Trees and shrubs which are not in direct conflict with proposed new construction shall be saved and protected from damage.

5. Rubble from the removal of miscellaneous structures and excess excavation which is to be wasted shall be disposed of on sites to be provided by the Contractor. These sites shall be approved by the engineer as to suitability, appearance and site location. Locations that, in the opinion of the Engineer, will leave an unsightly appearance will not be approved.

6. It will be the Contractor's responsibility to field check the project area to determine the extent of Site Clearing and Restoration to be performed.

7. Contractor shall not start work on the project until the project inspector is assigned to the project and is present on the site. Any work done without inspection will be required to be uncovered for inspection.

8. Coordinate system used to locate proposed inlets and manholes based on the PK Nail located at the intersection of centerlines of Elm and Edwards. Coordinates for this point is Northing: 5000.000, Easting: 5000.000. The second point for orientation is the rebar located at the intersection of Murdock and Edwards centerlines Coordinates for this point are Northing: 5950.000, Easting 5000.000.

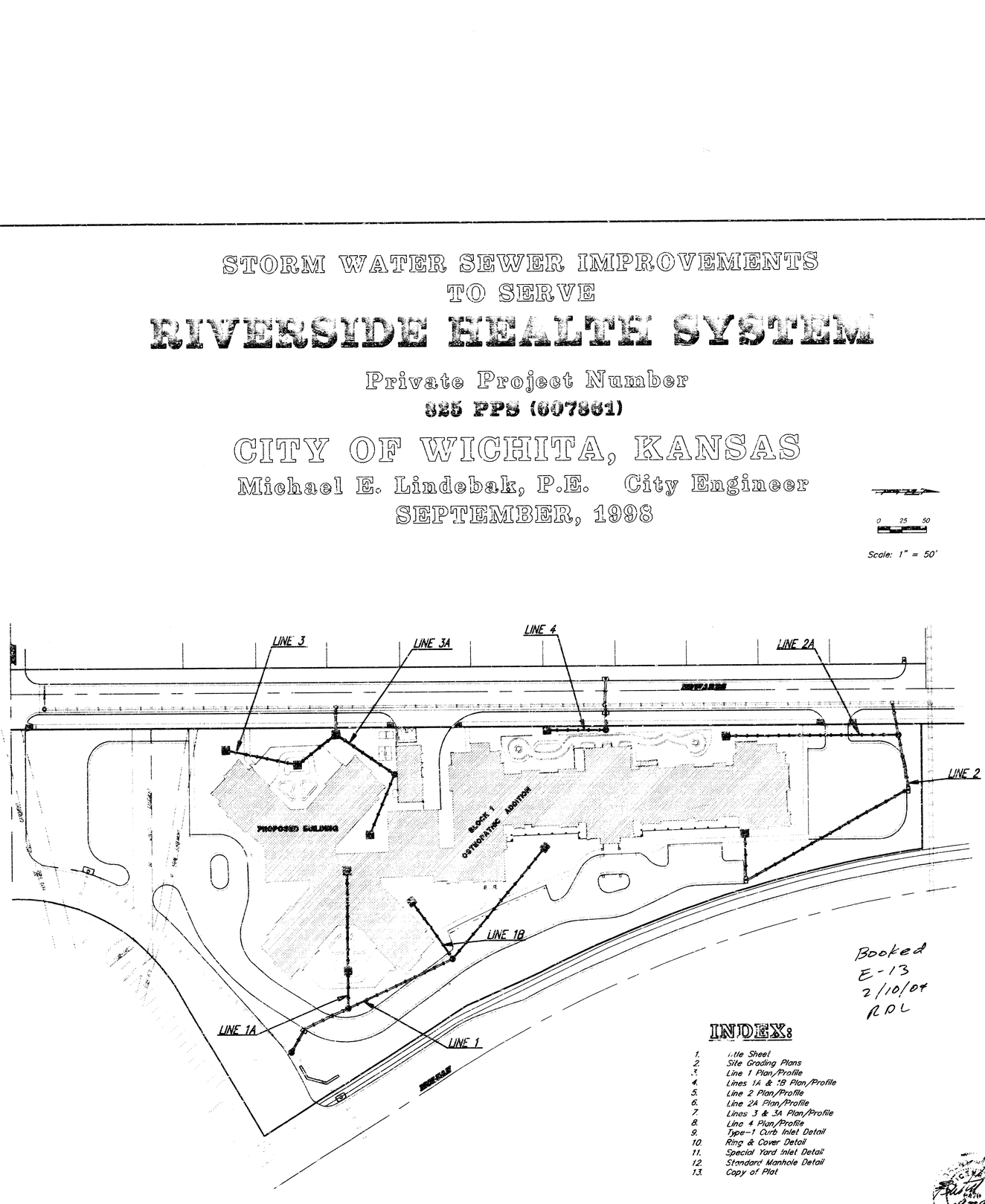

Scale: 1" = 50'

INDEX:

1. Title Sheet
2. Site Grading Plans
3. Line 1 Plan/Profile
4. Lines 1A & 1B Plan/Profile
5. Line 2 Plan/Profile
6. Line 2A Plan/Profile
7. Lines 3 & 3A Plan/Profile
8. Line 4 Plan/Profile
9. Type-1 Curb Inlet Detail
10. Ring & Cover Detail
11. Special Yard Inlet Detail
12. Standard Manhole Detail
13. Copy of Plat

Booked
E-13
2/10/04
RDL

BENCHMARK:

"□" Located on top of West Side of Mclean Blvd. and South right-of-way line of vacated Murdock
Elev. = 115.91 (City Datum)

APPROVED AS NOTED
BY CITY ENGINEER OF WICHITA
Storm Sewer VRH 9/23/98

NOTE TO CONTRACTORS

Installation inspection and testing for this project is to be provided by a Licensed Consulting Engineering Firm under contract with the Owner/Developer. Said inspection to be in accordance with the City of Wichita standard construction engineering practices and certified by a Licensed Professional Engineer. No work shall be performed in dedicated easements or public right-of-way by the Contractor without such inspection nor shall any work be commenced without written authorization by the City Engineer. All Construction and Materials shall comply with the City of Wichita Specifications and Standards (on file and available in the City Engineer's Office).

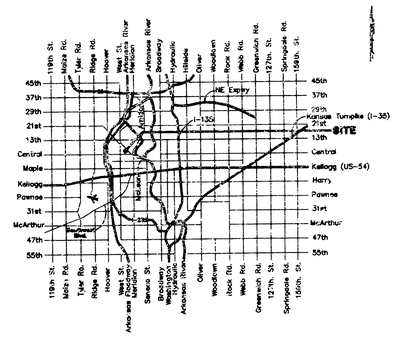

Vicinity Map

BAUGHMAN COMPANY P.A.
ENGINEERING & SURVEYING
316/262-7271 • 315 ELLIS • WICHITA, KANSAS 67211

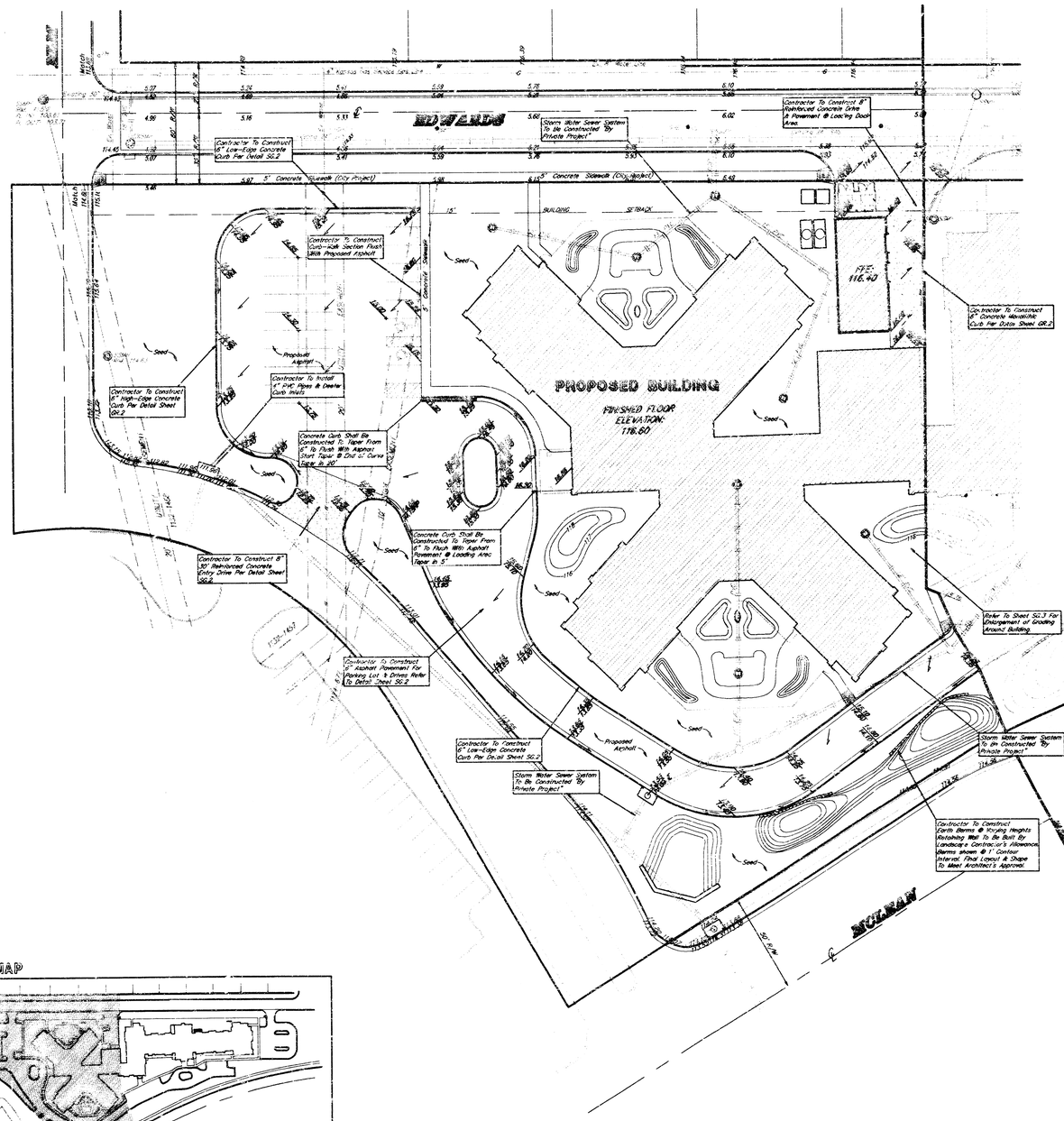

KEY MAP

BENCHMARK:

"□" Located on top of curb on West side of Mclean Blvd. and South right-of-way line of vacated Wurdock.
Elevation = 115.91 City Datum

LEGAL DESCRIPTION:

Block 1, Osteopathic Addition to Wichita, Kansas, TOGETHER with the S 1/2 of vacated Wurdock Avenue lying north of and adjacent to said Block 1, EXCEPT that part of said Block 1 lying south of and southeasterly of the following described line: Commencing at the SW corner of said Block 1; thence N00°E along the west line of said Block 1, 100 feet to a corner of said Block 1; thence N89°55'20"W along a westerly line of said Block 1, 25 feet to a corner of said Block 1; thence N00°E along the west line of said Block 1, 485 feet to a corner of said Block 1; thence S89°55'30"E along the westerly line of said Block 1, 35 feet to a corner of said Block 1, and for a point of beginning; thence N00°E, 172.40 feet to the P.C. of a curve to the right; thence northerly and northeasterly along said curve, having a central angle of 67°59'01" and a radius of 195 feet, an arc distance of 231.38 feet, (having a chord length of 218.04 feet bearing N24°48'59"e) to the P.T. of said curve; thence N58°48'30"E, 173.73 feet to a point on the easterly line of said Block 1 and there ending, and EXCEPT that part taken for the right-of-way in Film 1175 at Page 1648.

GRADING NOTES:

1. Contractor will be required to provide notice to utility companies a minimum of twenty-four (24) hours prior to any excavation, as follows:

   Kansas One-Call 887-2470

   The Contractor must notify the following in case of an emergency:

Multimedia Cablevision	262-0861
K.P.L. Gas Service Company	383-8550
Kansas Gas & Electric Company	383-9600
Southwestern Bell Telephone Company	800-344-7233
City of Wichita Water Dept. (Emergency)	268-4908
City of Wichita Sewer Maint. (Shop 1)	268-4071

2. Exist. utilities and their locations, as shown on the plans, represent the best information obtainable for design. Location information has been obtained from the various utility companies and is either from company record drawings or company-provided field locations. The Contractor will be required to work around existing utilities which do not conflict with proposed construction.
3. Traffic affected by the construction on this project shall be handled in accordance with the latest edition of the Manual on Uniform Traffic Control Devices.
4. The Contractor to verify utility locations prior to construction of this project.
5. All disturbed areas shall be seeded with Pabel II issue at the rate of 340 lbs. per acre. Fertilizer (13-13-13) shall be applied at the rate of 100 lbs. per acre.
6. Signing and striping shall be installed in accordance with City of Wichita Specifications and Codes. Striping shall be painted markings in conformance with the latest edition of the Standard Specifications for State Road and Bridge Construction by the Kansas Department of Transportation.
7. All striping shall be solid, 4" in width and shall be yellow or white in color.
8. All trees and shrubs in direct conflict with construction shall be removed.
9. Paved Lot to be constructed with 6" asphaltic concrete pavement (4" bituminous base/2" A.C. surface) and subgrade to be compacted to 95% Standard Density. Asphaltic pavement to conform
10. Utility service connections shall be [illegible] specifications. City codes
11. Retaining walls for berms shall be constructed under the Landscape Contractor's allowance. The materials to be used will be under the architect's discretion.
12. The General Contractor shall be responsible for the installation of drain tile around the foundation and connection to the 6" PVC shown on the plan. The 6" PVC connecting the proposed drain tile and inlets shall be installed by the mechanical contractor.
13. The Contractor is to ensure that all turf areas drain away from the proposed building foundation. The drainage should either be directed over the curb or into proposed inlets. This includes water from roof drains.
14. The Contractor shall be responsible for providing and installing all necessary equipment for drainage system as depicted on plan. This includes all grates, catch basins, risers, adapters and piping. The Contractor shall be responsible for ensuring positive drainage through drainage system.
15. The Contractor shall be responsible for all drainage systems which have pipe sized under 12". NDS drainage products or approved equal shall be used for these systems.

RIVERSIDE HEALTH SYSTEM

SITE GRADING

BAUGHMAN COMPANY P.A.
ENGINEERING, SURVEYING, & PLANNING
316-262-7271 • 313 ELLIS • WICHITA, KANSAS 672

PROJECT NUMBER	SHEET
825PPS(807861)	2A of 13

DESIGN	DRAWN	APPROVED	DATE	SCALE
NBW	JAB	NBW		SHOWN

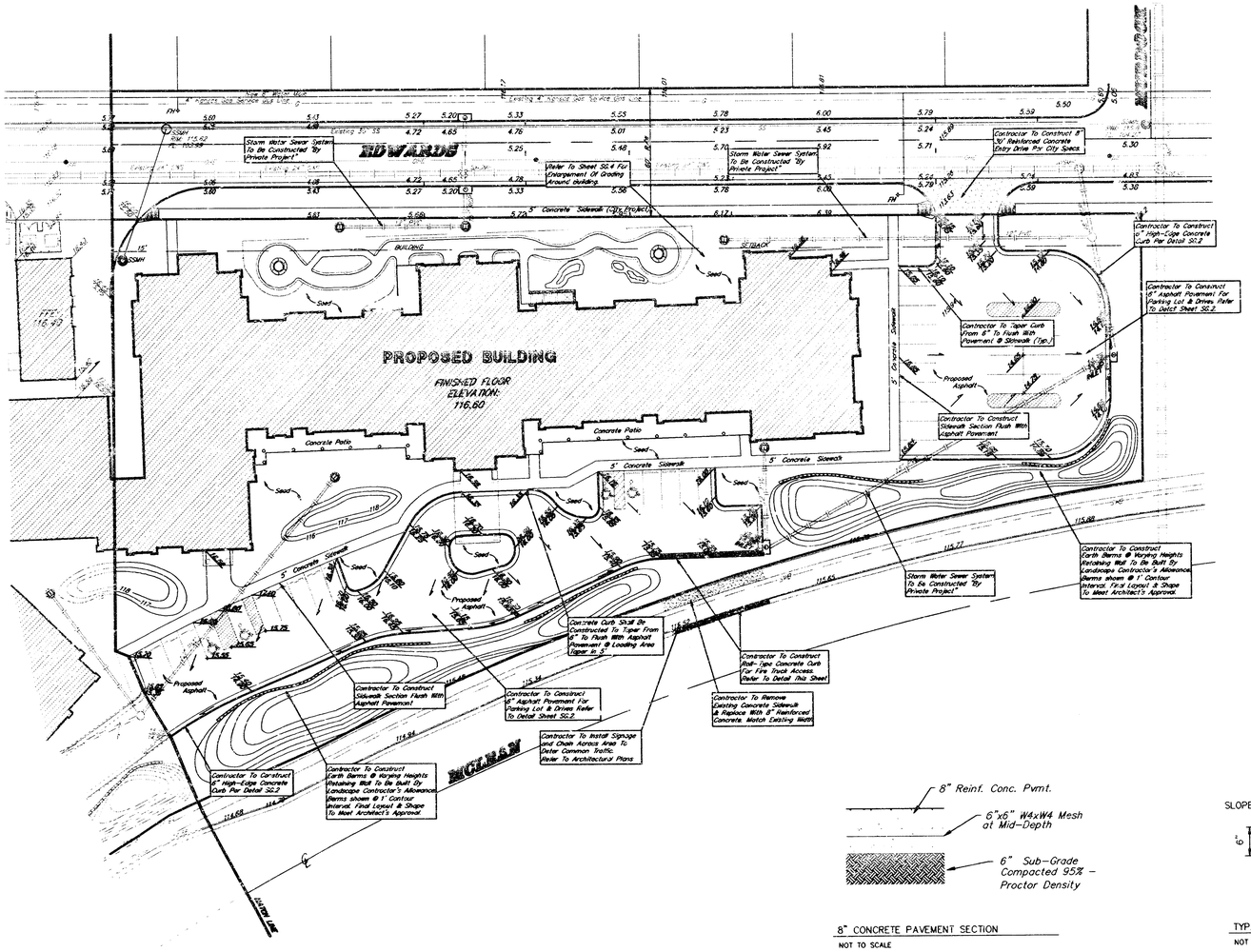

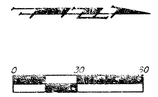

KEY MAP

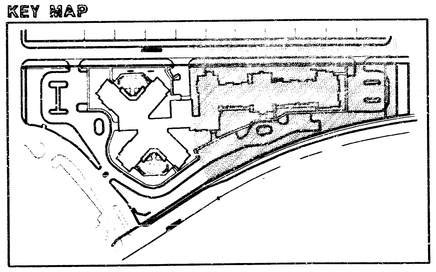

8" CONCRETE PAVEMENT SECTION
NOT TO SCALE

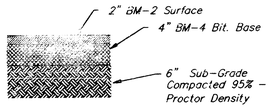

6" ASPHALT PAVEMENT SECTION
NOT TO SCALE

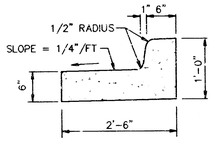

TYP. LOW EDGE CURB AND GUTTER SECTION
NOT TO SCALE

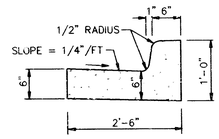

TYP. HIGH EDGE CURB AND GUTTER SECTION
NOT TO SCALE

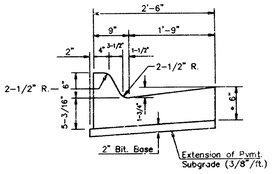

MONOLITHIC CURB & GUTTER – (6")
NOT TO SCALE

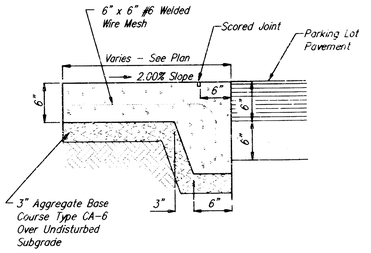

TYP. CURB-WALK SECTION
NOT TO SCALE

RIVERSIDE HEALTH SYSTEM

SITE GRADING

BAUGHMAN COMPANY P.A.
ENGINEERING, SURVEYING, & PLANNING
316-262-7271 • 315 ELLIS • WICHITA, KANSAS 67211

PROJECT NUMBER	SHEET
825PPS(607861)	2B OF 13

DESIGN	DRAWN	APPROVED	DATE	SCALE
NBW	JAB	NBW		SHOWN

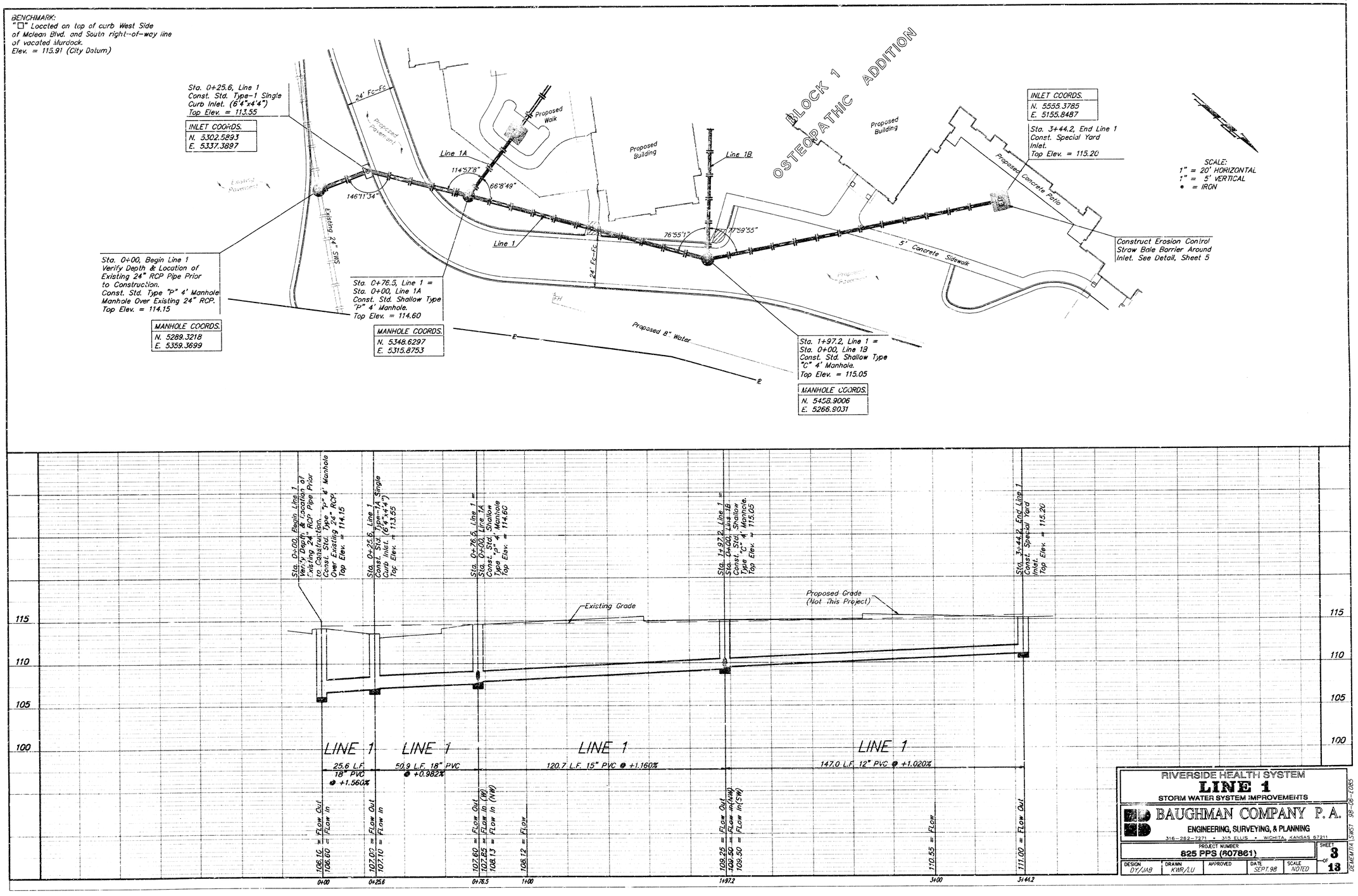

RIVERSIDE HEALTH SYSTEM
LINE 1
STORM WATER SYSTEM IMPROVEMENTS

BAUGHMAN COMPANY P.A.
ENGINEERING, SURVEYING, & PLANNING
316-262-7271 • 315 ELLIS • WICHITA, KANSAS 67211

PROJECT NUMBER	SHEET
825 PPS (607861)	3 OF 13

DESIGN	DRAWN	APPROVED	DATE	SCALE
DY/JAB	KWR/LU		SEPT.98	NOTED

DEMEMTIA SWST 98-06-E085

BENCHMARK:
"□" Loccted on top of West Side
of Mclean Blvd. and South right-of-way line
of vacated Murdock
Elev. = 115.91 (City Datum)

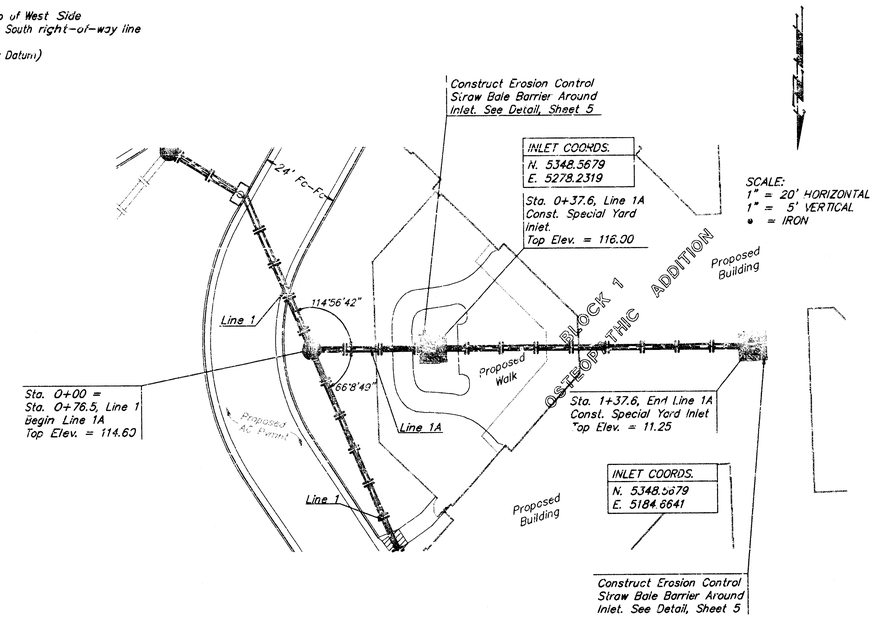

BENCHMARK:
"□" Located on top of West Side
of Mclean Blvd. and South right-of-way line
of vacated Murdock
Elev. = 115.91 (City Datum)

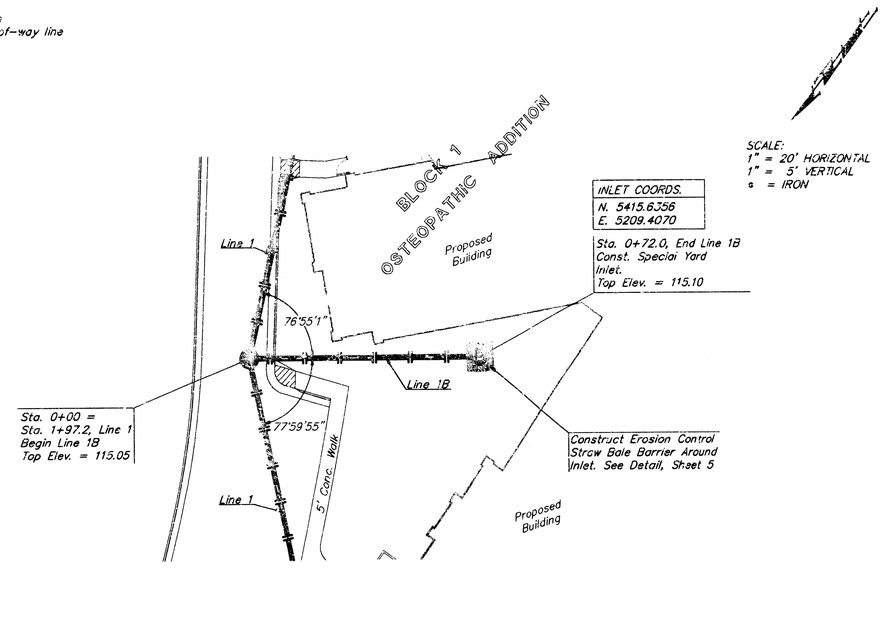

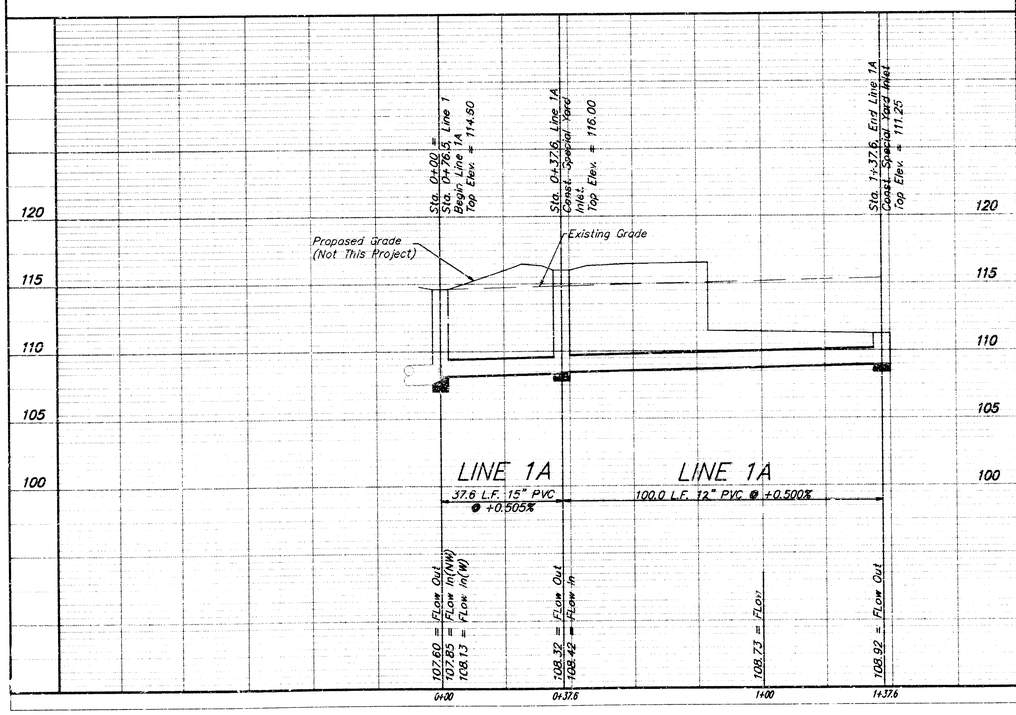

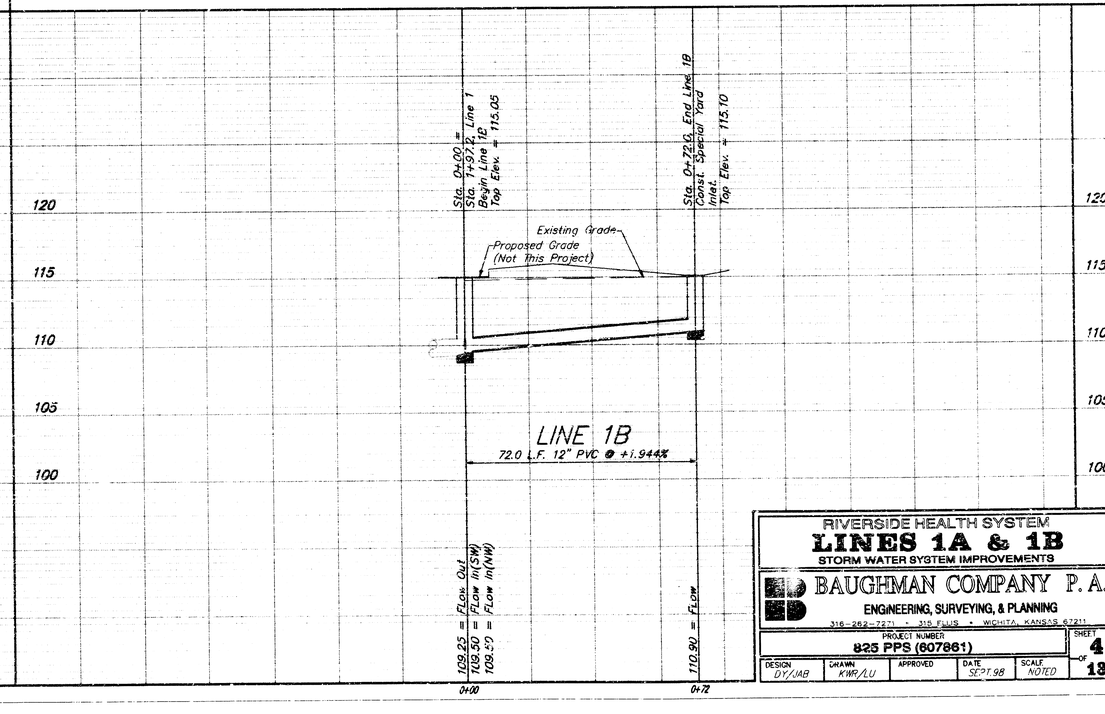

RIVERSIDE HEALTH SYSTEM
LINES 1A & 1B
STORM WATER SYSTEM IMPROVEMENTS

BAUGHMAN COMPANY P.A.
ENGINEERING, SURVEYING, & PLANNING
316-262-7271 • 315 FLUS • WICHITA, KANSAS 67211

PROJECT NUMBER	SHEET
825 PPS (607861)	4 OF 13

DESIGN	DRAWN	APPROVED	DATE	SCALE
DY/JAB	KWR/LU		SEPT.98	NOTED

DEMENTA SHEET 99-06-E085

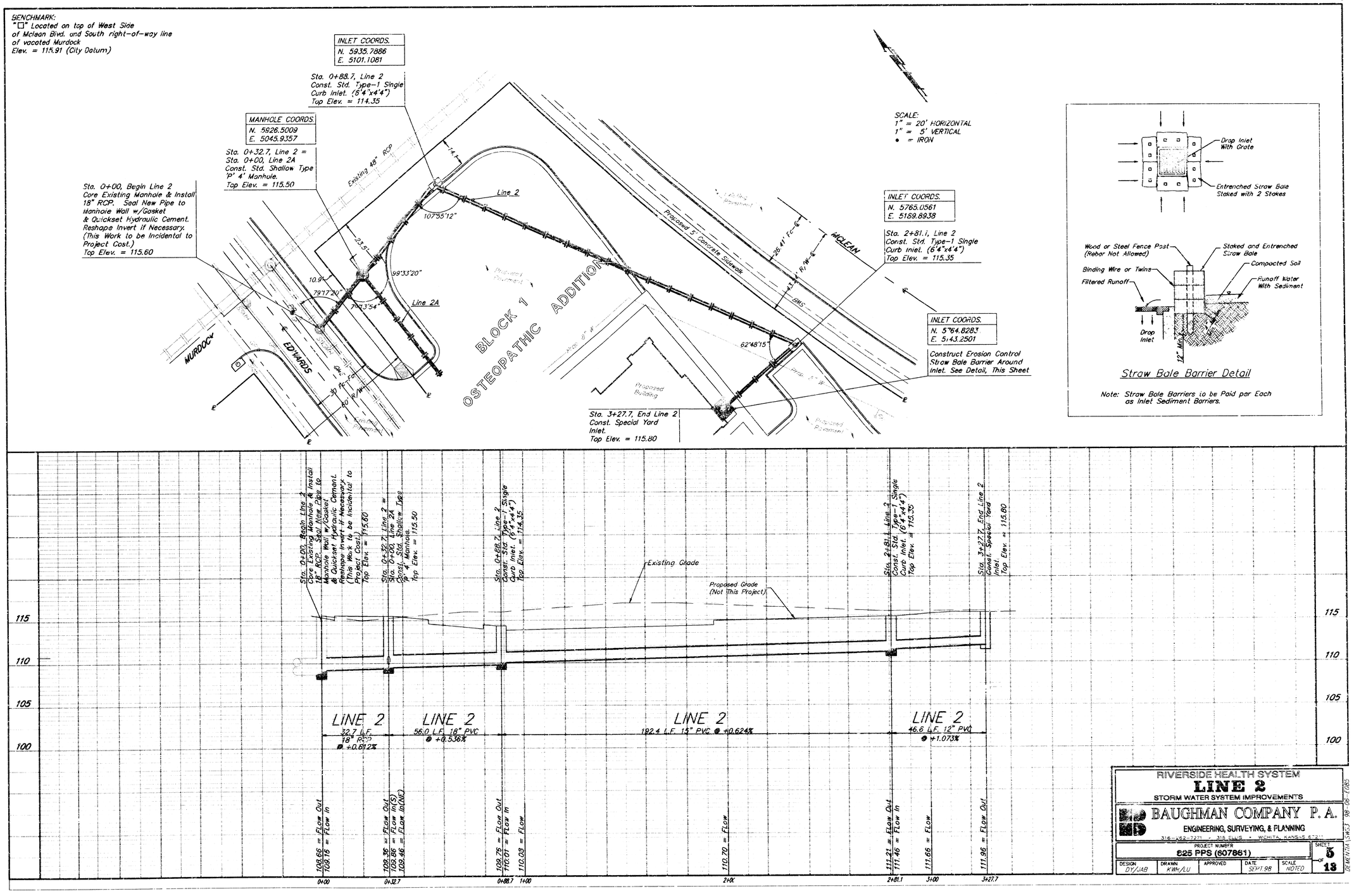

RIVERSIDE HEALTH SYSTEM
LINE 2
STORM WATER SYSTEM IMPROVEMENTS

BAUGHMAN COMPANY P. A.
ENGINEERING, SURVEYING, & PLANNING
316-262-7271 • 315 ELLIS • WICHITA, KANSAS 67211

PROJECT NUMBER					SHEET
825 PPS (607861)					5 OF 13
DESIGN DY/JAB	DRAWN KWH/LU	APPROVED	DATE SEPT.98	SCALE NOTED	

DEMENTIA SW53 98-06-E085

BENCHMARK:
"□" Located on top of West Side
of Mclean Blvd. and South right-of-way line
of vacated Murdock
Elev. = 115.91 (City Datum)

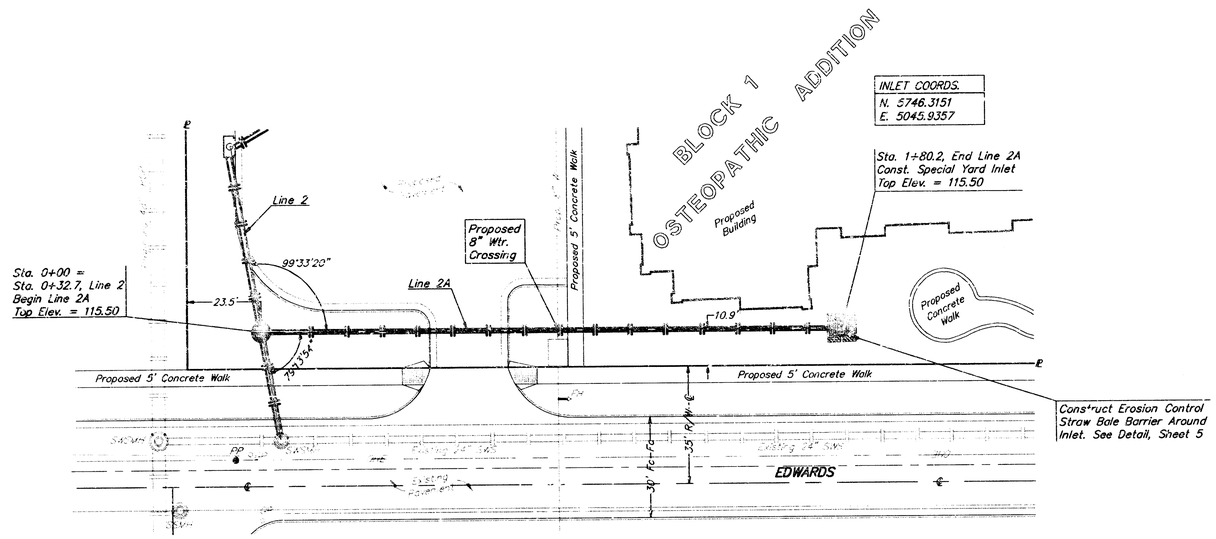

SCALE:
1" = 20' HORIZONTAL
1" = 5' VERTICAL
• = IRON

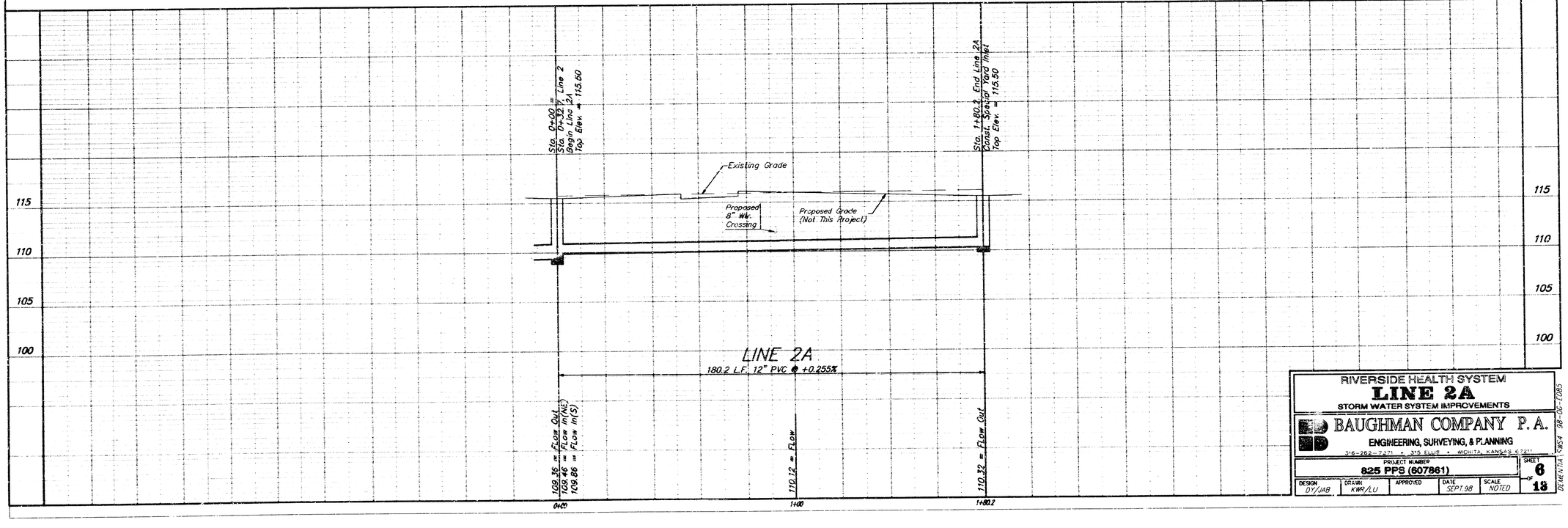

RIVERSIDE HEALTH SYSTEM
LINE 2A
STORM WATER SYSTEM IMPROVEMENTS

BAUGHMAN COMPANY P.A.
ENGINEERING, SURVEYING, & PLANNING
316-262-7271 • 315 ELLIS • WICHITA, KANSAS 67211

PROJECT NUMBER					SHEET
825 PPS (607861)					6 OF 13
DESIGN DY/JAB	DRAWN KWR/LU	APPROVED	DATE SEPT.98	SCALE NOTED	

DEMENTIA SWS4 98-06-E085

BENCHMARK:
"□" Located on top of West Side
of Mclean Blvd. and South right-of-way line
of vacated Murdoc:
Elev. = 115.91 (City Datum)

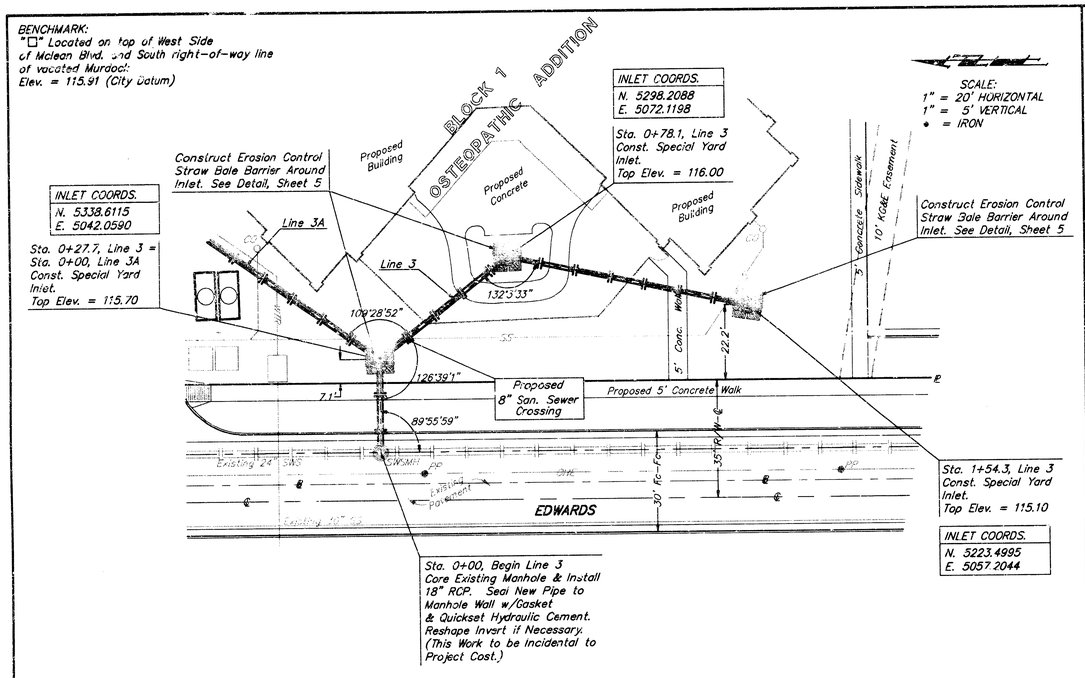

INLET COORDS.
N. 5298.2088
E. 5072.1198

Sta. 0+78.1, Line 3
Const. Special Yard Inlet.
Top Elev. = 116.00

INLET COORDS.
N. 5338.6115
E. 5042.0590

Sta. 0+27.7, Line 3 =
Sta. 0+00, Line 3A
Const. Special Yard Inlet.
Top Elev. = 115.70

SCALE:
1" = 20' HORIZONTAL
1" = 5' VERTICAL
● = IRON

Sta. 1+54.3, Line 3
Const. Special Yard Inlet.
Top Elev. = 115.10

INLET COORDS.
N. 5223.4995
E. 5057.2044

Sta. 0+00, Begin Line 3
Core Existing Manhole & Install 18" RCP. Seal New Pipe to Manhole Wall w/Gasket & Quickset Hydraulic Cement. Reshape Invert if Necessary. (This Work to be Incidental to Project Cost.)

BENCHMARK:
"□" Located on top of West Side
of Mclean Blvd. and South right-of-way line
of vacated Murcock
Elev. = 115.91 (City Datum)

Sta. 0+71.9, Line 3A
Const. Std. Shallow Type
5' 4' Manhole.
Top Elev. = 116.25

MANHOLE COORDS.
N. 5398.3149
E. 5082.1307

Sta. 0+00 =
Sta. 0+27.7, Line 3
Begin Line 3A
Top Elev. = 115.70

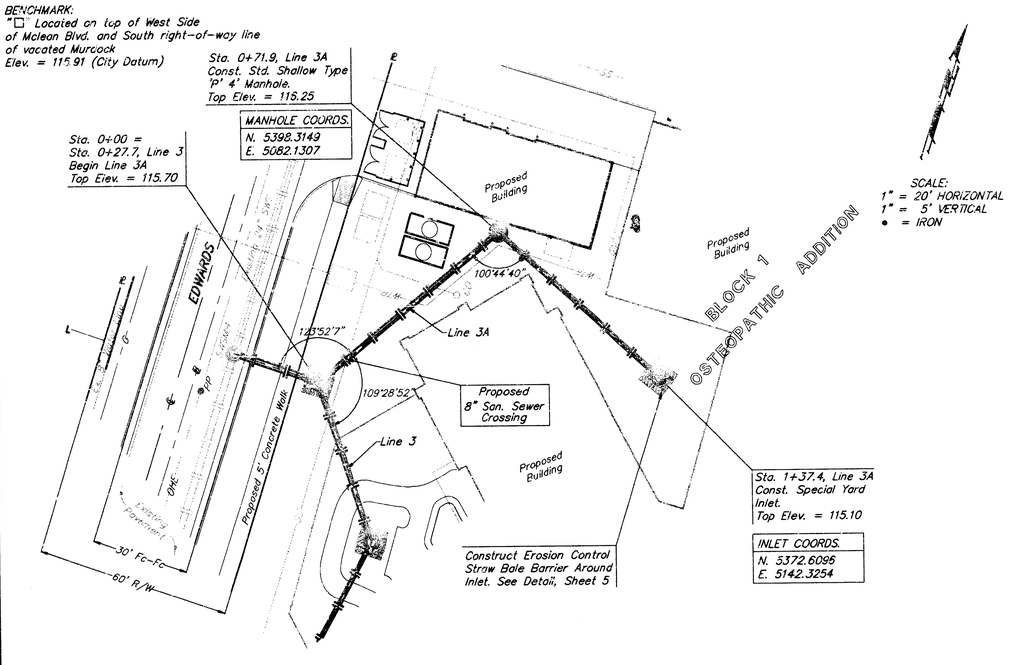

SCALE:
1" = 20' HORIZONTAL
1" = 5' VERTICAL
● = IRON

Sta. 1+37.4, Line 3A
Const. Special Yard Inlet.
Top Elev. = 115.10

INLET COORDS.
N. 5372.6096
E. 5142.3254

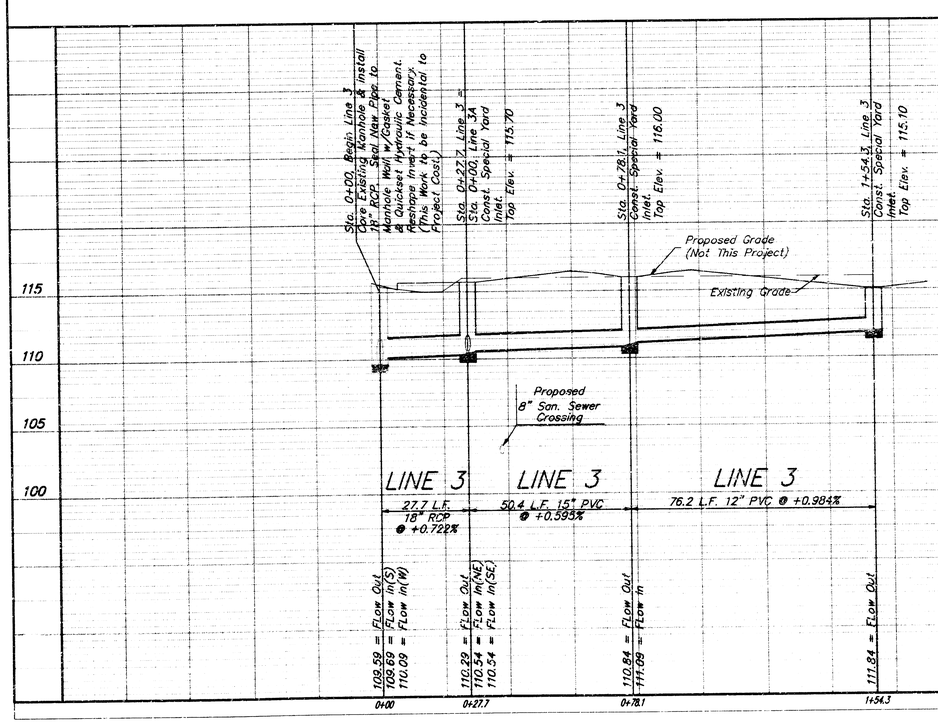

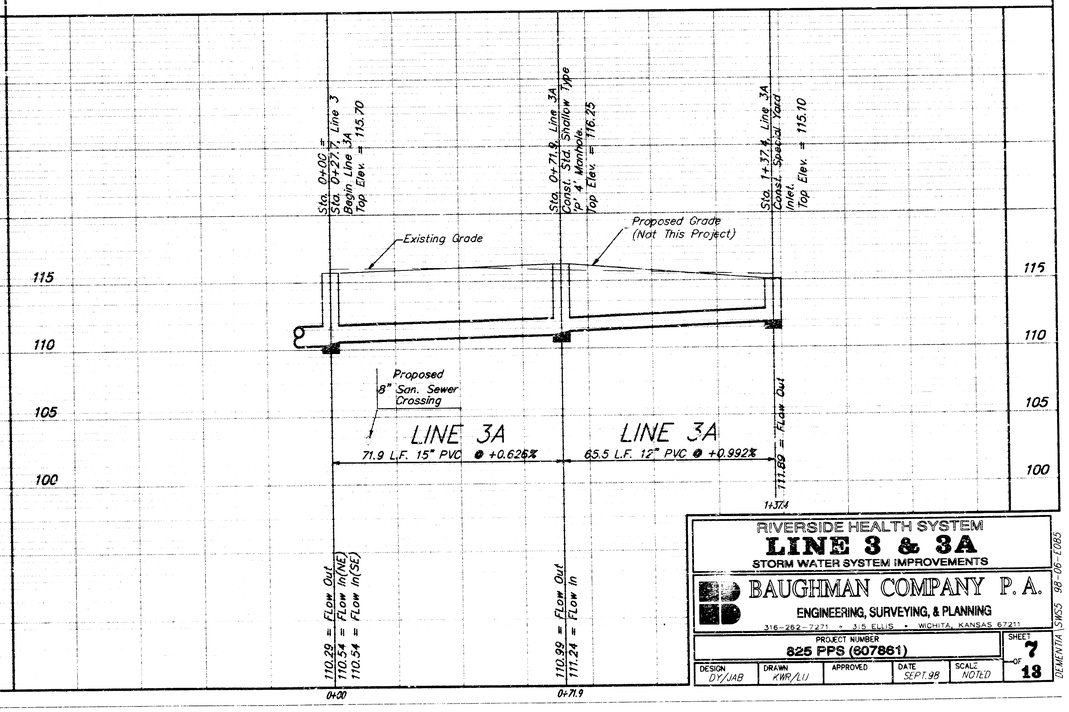

RIVERSIDE HEALTH SYSTEM
LINE 3 & 3A
STORM WATER SYSTEM IMPROVEMENTS

BAUGHMAN COMPANY P.A.
ENGINEERING, SURVEYING, & PLANNING
316-262-7271 • 315 ELLIS • WICHITA, KANSAS 67211

PROJECT NUMBER 825 PPS (607861)
SHEET 7 OF 13

DESIGN	DRAWN	APPROVED	DATE	SCALE
DY/JAB	KWR/LU		SEPT.98	NOTED

DLMENTIA \SKCS 98-06-1265

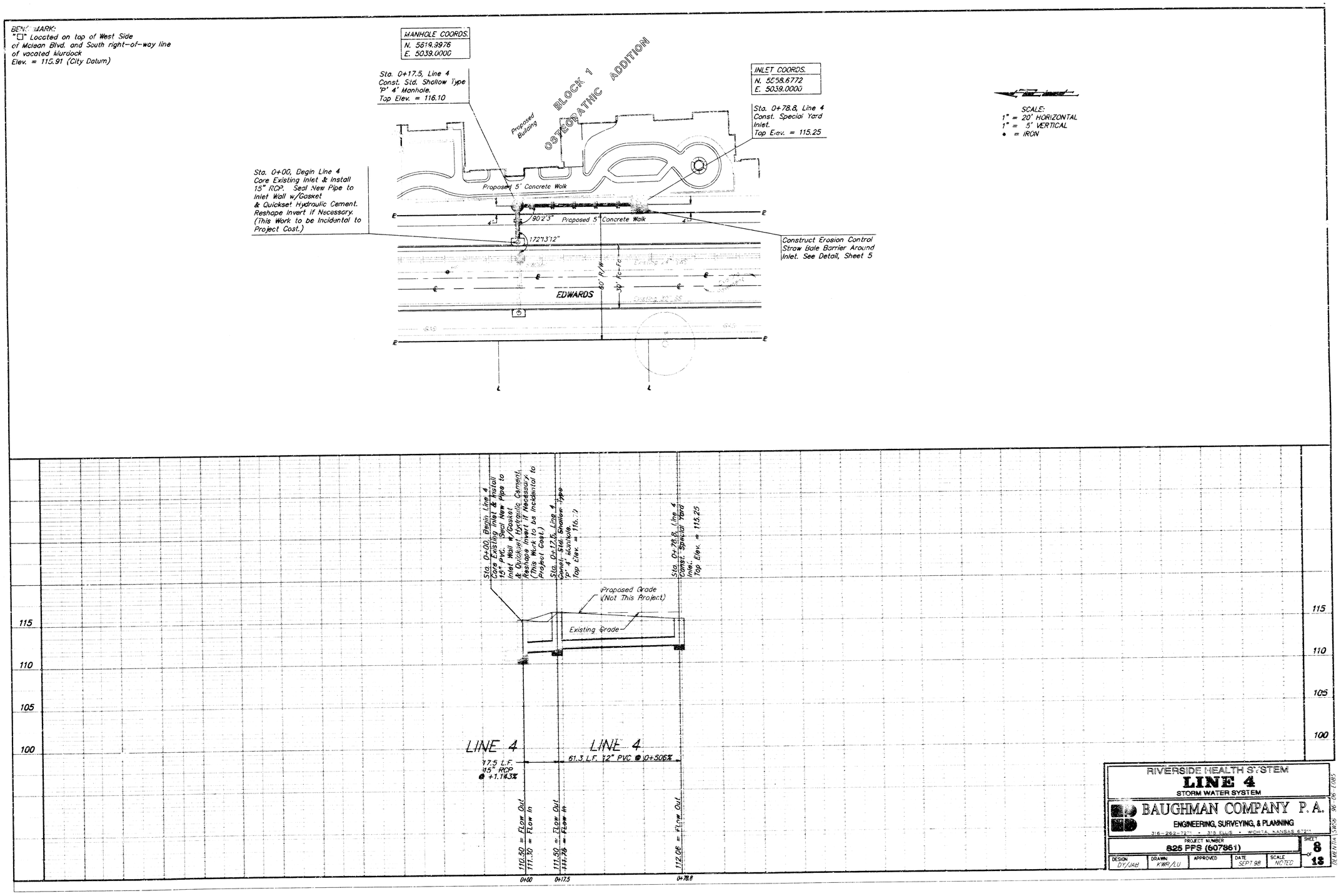

RIVERSIDE HEALTH SYSTEM

LINE 4

STORM WATER SYSTEM

BAUGHMAN COMPANY P.A.

ENGINEERING, SURVEYING, & PLANNING

316-262-7271 • 315 ELLIS • WICHITA, KANSAS 67211

PROJECT NUMBER	SHEET
825 PFS (607861)	8 of 13

DESIGN	DRAWN	APPROVED	DATE	SCALE
DY/JAB	KWR/LU		SEPT 98	NOTED

DEMENTIA SWS6 96-06-E085

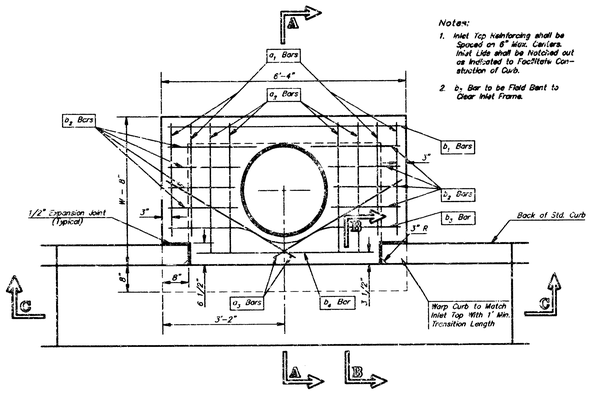

PLAN

Notes:

1. Inlet Top Reinforcing shall be Spaced on 6" Max. Centers. Inlet Lids shall be Notched out as Indicated to Facilitate Construction of Curb.
2. b_2 Bar to be Field Bent to Clear Inlet Frame.

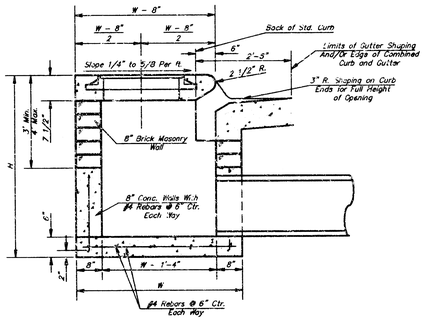

SECTION A–A

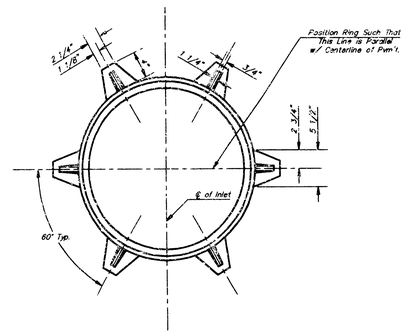

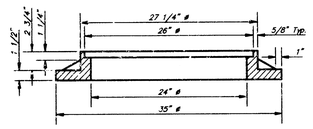

MANHOLE RING AND COVER

*See City of Wichita Standard Manhole Ring and Cover Detail Sheet for Cover Details to Be Used With Inlet Frame.

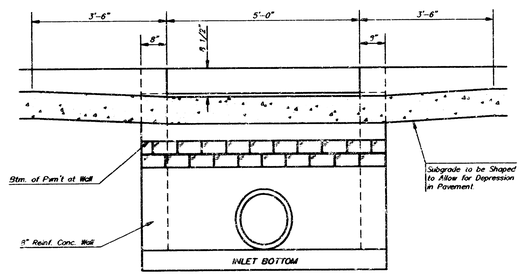

SECTION C–C

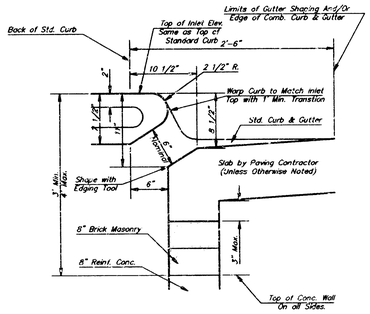

SECTION B–B

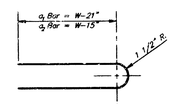

BENDING DIAGRAM

STEEL SCHEDULE

BAR		a_1	a_2	a_3	b_1		b_2			b_3	a_4	Wt. Lbs
					W=4'-4"	W=5'-4"	W=4'-4"	W=7'-4"	W=5'-4"			
NUMBER		4	4	2	1	3	5	7	9	6	1	1	
SIZE		#4	#4	#4	#4	#4	#4	#4	#4	#4	#4	#6	
LENGTH	W=4'-4"	5'-7"	6'-7"	4'-0"	6'-1"	-	-	-	-	1'-9"	6'-2"	4'-8"	60±
	W=5'-4"	7'-7"	8'-7"	5'-0"	-	6'-1"	-	-	-	1'-9"	6'-2"	4'-8"	81±
	W=6'-4"	9'-7"	10'-7"	6'-0"	-	-	6'-1"	-	-	1'-9"	6'-2"	4'-8"	101±
	W=7'-4"	11'-7"	12'-7"	7'-0"	-	-	-	6'-1"	-	1'-9"	6'-2"	4'-8"	121±
	W=8'-4"	13'-7"	14'-7"	8'-0"	-	-	-	-	6'-1"	1'-9"	6'-2"	4'-8"	141±

Note: a_2 Bars to be Placed Approx. 2" Below Top of Inlet Cover.

STANDARD CURB INLET PRECAST TOPS			
W	PRE-CAST TOP SIZE	PIPE SIZE	CU. YD. CONC.
4'-4"	5'-8" 6'-4" 7 1/2"	21" & SMALLER	0.38±
5'-4"	6'-8" 6'-4" 7 1/2"	24" & 33"	0.51±
6'-4"	7'-8" 6'-4" 7 1/2"	36" & 42"	0.64±
7'-4"	8'-8" 6'-4" 7 1/2"	48" & 54"	0.77±
8'-4"	9'-8" 6'-4" 7 1/2"	60" & 66"	0.90±

GENERAL NOTES

1. Concrete tops to be installed on thin mortar cushion to insure full support along brick walls. Concrete tops may be cast in place or precast. Concrete used for inlet construction shall be concrete pavement mix.
2. Contractor shall have the option of constructing 8" brick masonry walls between the concrete inlet base and top on this inlet when W=6'-4" and H=7'-0" or less.
3. Inlet invert shall be shaped with 8 sack sand mix concrete to create flow channels and to increase hydraulic efficiency such that the inlet will be self cleaning between all inlet and/or outlet pipes.
4. The ends of all pipes installed in inlets shall be cut off flush with the inside face of the inlet wall.
5. This detail is identical to the standard detail drawing except that the gutter transition length is increased from 2'-0" to 3'-6".

MODIFIED CURB INLET

TYPE 1 CURB INLET

BAUGHMAN COMPANY P.A.
ENGINEERING, SURVEYING, & PLANNING
316-262-7271 • 315 E. LIS • WICHITA, KANSAS 67211

PROJECT NUMBER				SHEET
825PPS(607881)				9 OF 13
DESIGN T.C.P.	DRAWN LANG	APPROVED	DATE 1997	SCALE NONE

L:\DETAILS\MTYP1-S

MANHOLE FRAME AND COVER DETAIL

ADOPTED AS STANDARD DESIGN BY
CITY OF WICHITA, KANSAS

MANHOLE COVER
Weight = 180 Lbs.

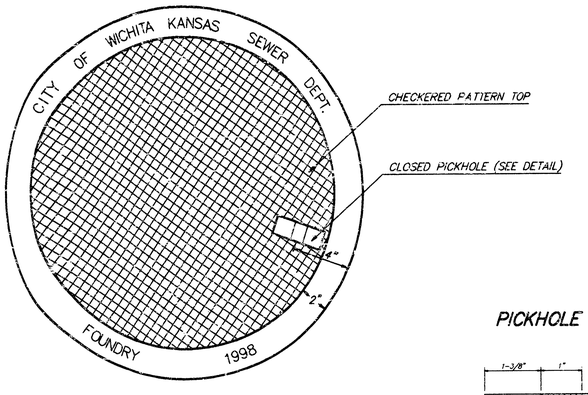

TOP VIEW

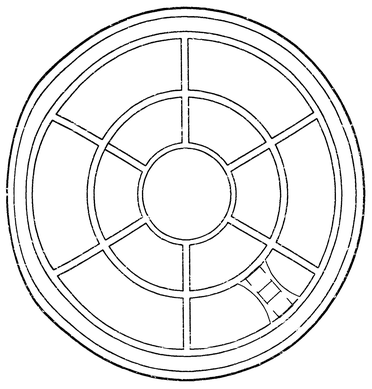

BOTTOM VIEW

PICKHOLE DETAIL

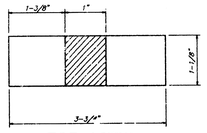

TOP VIEW

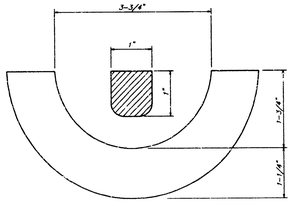

SECTION VIEW

MANHOLE FRAME
Weight = 145 Lbs.

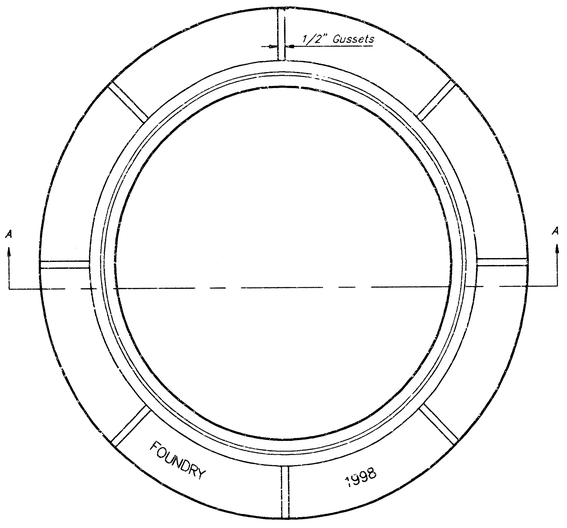

TOP VIEW

GENERAL NOTES

MANHOLE CASTINGS SHALL BE MANUFACTURED USING GOOD QUALITY GRAY IRON CONFORMING TO CLASS 30 OF A.S.T.M. DESIGNATION A-48. DIMENSIONS AND WEIGHTS SHOWN ON THE DETAILED DRAWINGS SHALL BE CONSIDERED AS MINIMUM REQUIREMENTS AND ANY DEVIATIONS FROM THE DIMENSIONS SHOWN MUST BE SPECIFICALLY APPROVED. THE FINISHED CASTINGS SHALL BE OF UNIFORM QUALITY, FREE FROM BLOWHOLES, POROSITY, HARD SPOTS, SHRINKAGE DISTORTIONS OR OTHER DEFECTS.

MANHOLE CASTINGS SHALL BE COATED WITH AN ASPHALT PAINT RESULTING IN A SMOOTH, TOUGH AND TENACIOUS COATING WHICH IS NOT BRITTLE OR TACKY.

MANHOLE CASTINGS SHALL BE MANUFACTURED SUCH THAT A COVER MANUFACTURED BY ANY ONE FOUNDARY WILL FIT INTERCHANGEABLY INTO A FRAME MANUFACTURED BY ANOTHER FOUNDRY AND STILL MEET ALLOWABLE CLEARANCES AND NON-ROCKING REQUIREMENTS. THIS WILL REQUIRE MANUFACTURING OF THE MATCHING FACES ON THE COVER AND THE FRAME TO CLOSE TOLERANCES.

THE OUTSIDE CIRCUMFERENCE OF THE VERTICAL FACE OF THE COVER AND THE INSIDE CIRCUMFERENCE OF THE VERTICAL FACE IN THE FRAME RECESS SHALL BE MANUFACTURED TO TOLERANCES SUCH THAT THE CLEARANCE BETWEEN THE COVER AND FRAME WILL NOT EXCEED 1/8" AT ANY POINT AROUND THE CIRCUMFERENCE OF THE COVER. THE SEATING SURFACES BETWEEN THE COVER AND FRAME SHALL BE MACHINED SUCH AS THESE SURFACES SHALL MAKE FULL CONTACT FOR THEIR FULL CIRCUMFERENCE TO PRECLUDE THE COVER FROM ROCKING IN THE FRAME.

THE MANHOLE FRAME AND COVER SHALL BE MARKED WITH LETTERING INDICATING THE NAME OF THE MANUFACTURER AND THE YEAR WHEN THE COVER OR FRAME WAS CAST. THE COVER SHALL BE FURTHER IDENTIFIED WITH REGARDS TO OWNERSHIP USING LETTERS AT LEAST 1 INCH IN HEIGHT. THIS IDENTIFICATION SHALL BE "CITY OF WICHITA SEWER DEPARTMENT". THE WORD DEPARTMENT MAY BE ABBREVIATED. THE TEXTURE OF THE TOP SURFACE OF THE COVER SHALL BE MANUFACTURED IN A CHECKERED PATTERN DESIGN AS INDICATED ON THE DRAWINGS. SMOOTH BLOCKOUTS SHALL BE UTILIZED TO HIGHLIGHT THE LETTERING ON THE COVER SURFACE. THE TOTAL AREA OF SMOOTH SURFACE BLOCKOUT SHALL NOT EXCEED THE AREA AS INDICATED ON THE DRAWING. POSITIONING OF SMOOTH BLOCKOUTS AND LETTERING MAY VARY FROM THAT SHOWN ON THE DETAILED DRAWING.

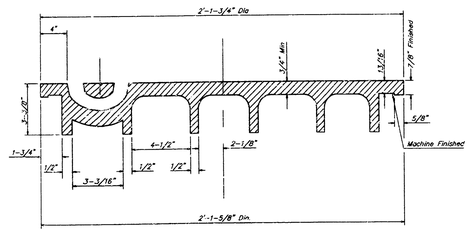

SECTION VIEW

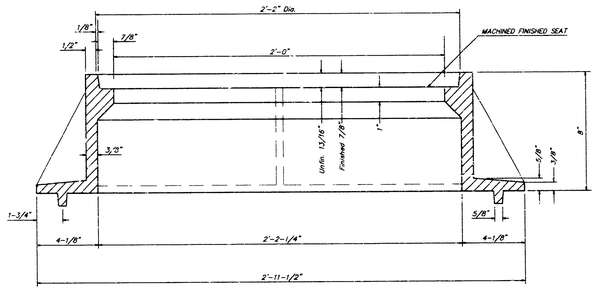

SECTION A-A

MANHOLE FRAME AND COVER DETAIL
ADOPTED AS STANDARD DESIGN BY
CITY OF WICHITA, KANSAS

BAUGHMAN COMPANY P. A.
ENGINEERING, SURVEYING, & PLANNING
316-262-7271 • 315 ELLIS • WICHITA, KANSAS 67211

PROJECT NUMBER	SHEET
625-PS(607861)	10 of 12

DESIGN	DRAWN	APPROVED	DATE	SCALE
C.O.W.	Staff		4/98	None

DETAILS/MHFRAME

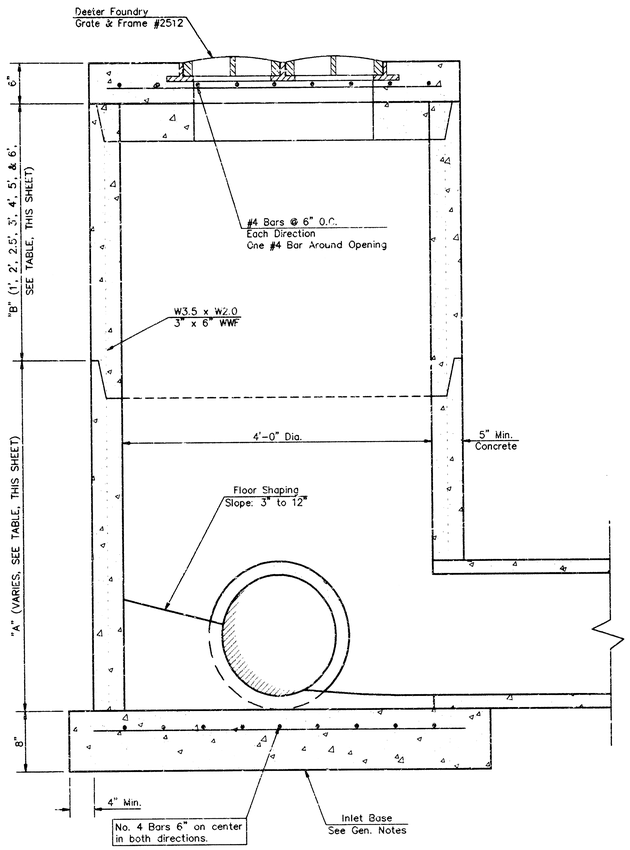

YARD INLET

LINE #	COORD.	TOP OF INLET	INLET FLOW
1	N5302.5893 E5337.3897	CURB	107.00
1	N5555.3785 E5155.8487	SPECIAL YARD	111.00
1A	N5348.5879 E5278.2319	SPECIAL YARD	108.32
1A	N5348.5879 E5184.6641	SPECIAL YARD	108.73
1B	N5415.6356 E5209.4070	SPECIAL YARD	110.90
2	N5935.7886 E5101.1081	CURB	109.76
2	N5765.0561 E5189.8938	CURB	111.21
2	N5764.0283 E5143.2501	SPECIAL YARD	111.96
2A	N5746.3151 E5045.9357	SPECIAL YARD	110.32
3	N5338.6115 E5042.0590	SPECIAL YARD	110.29
3	N5298.2088 E5072.1198	SPECIAL YARD	110.84
3	N5223.4995 E5057.2044	SPECIAL YARD	111.84
3A	N5372.6096 E5142.3254	SPECIAL YARD	111.89
4	N5558.6772 E5039.0000	SPECIAL YARD	112.06

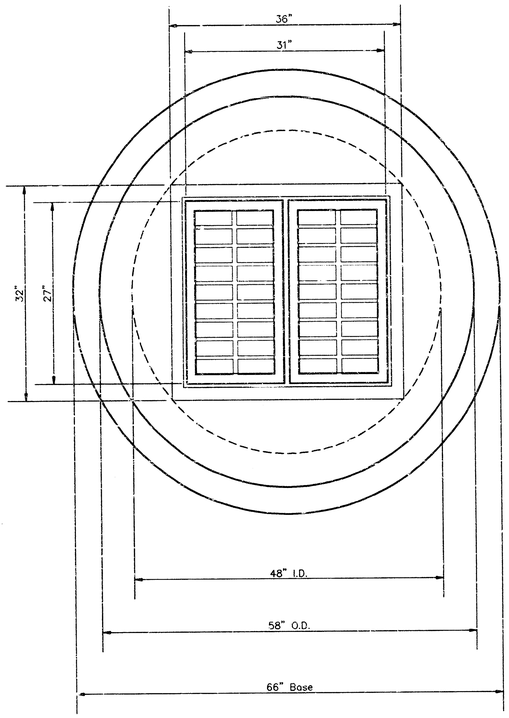

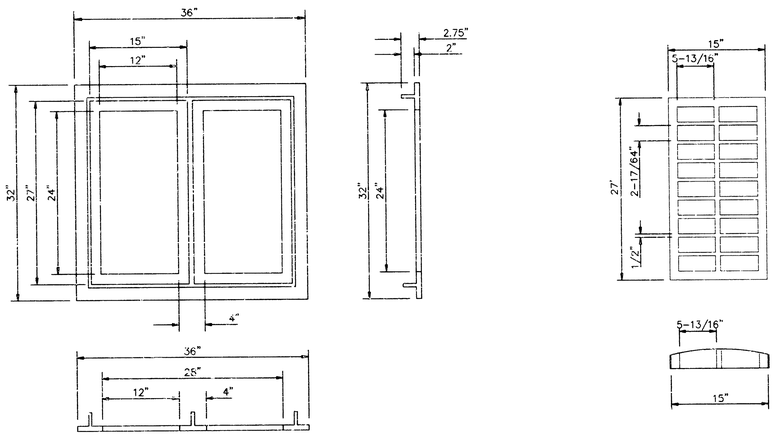

DEETER #2512 CATCH BASIN INLET GRATE & FRAME

GENERAL NOTES

1. Mortar used in masonry construction shall contain 8 sacks of cement per cubic yard. Concrete used in yard inlet bases shall conform to the requirements of concrete for concrete pavement construction as specified in the city standard paving specifications using city concrete cement mix without air entraining.
2. Reinforcing steel shall be installed in the yard inlet bases and shall consist of no. 4 bars placed on 6" centers in both directions. The yard inlet base reinforcement shall be placed 6" above the bottom of the yard inlet base. All costs for furnishing and installing reinforcing steel shall be included in the unit price bid for the yard inlet.
3. The floors of all yard inlet shall be shaped with flow channels such that the inlets will be self cleaning and free of areas where solids could be deposited. Flow channels shall be formed to match the bottom halves of the inflowing pipes and the outflowing pipe as shown by the drawings. Inlet floors shall have slopes of 3 inches per foot in the areas outside of the flow channels sloped toward the flow channels. Pipes laid through inlets shall have the top half removed to neat lines for the full inside diameter of the inlet. Inlet floors shall then be shaped around the bottom half of the pipe which forms the flow channel.
4. Pipes installed within the excavation made for the inlet shall be cradled with concrete to the limits of the inlet excavation. When clay pipe is used, the cradle shall extend to the first joint outside the inlet. The cradle shall be terminated at the clay pipe joint in a manner which will maintain the flexibility of the joint. Cost of cradle within inlet excavation or to clay pipe joints adjacent to inlet shall be included in the unit price bid for the inlet.
5. Inlet grate castings and inlet frame castings shall conform to the requirements as indicated in the standard specifications and as shown in the standard detail drawing.
6. The crowns of inflowing pipes shall never be set lower than the crown of the outflowing pipe.
7. Joints between inlet sections to be sealed with two two wraps of extruded butyl rubber joint mastic meeting City of Wichita Type "P" Manhole Specifications.
8. Special yard inlet shall be paid for at the unit price bid per each. All standard yard inlet diameters will be 4'.

SPECIAL YARD INLET
WICHITA, KANSAS

BAUGHMAN COMPANY P.A.
ENGINEERING, SURVEYING, & PLANNING
316-262-7271 • 315 ELLIS • WICHITA, KANSAS 67211

PROJECT NUMBER 825PPS(607861)
SHEET 11 OF 12

DESIGN	DRAWN	APPROVED	DATE	SCALE NONE

Standard

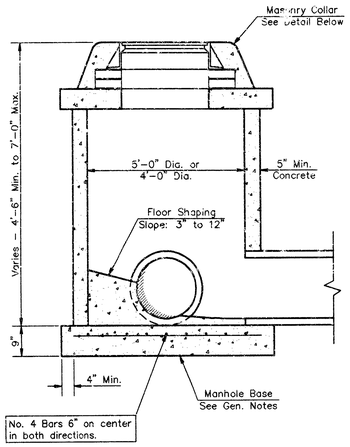

SHALLOW TYPE "P" MANHOLE

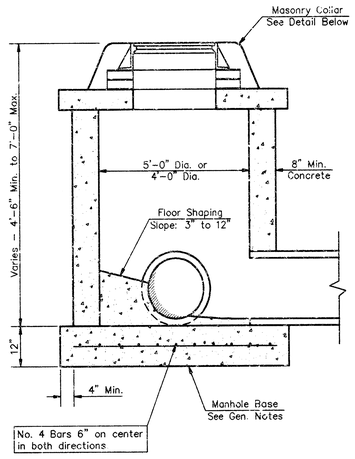

SHALLOW TYPE "C" MANHOLE

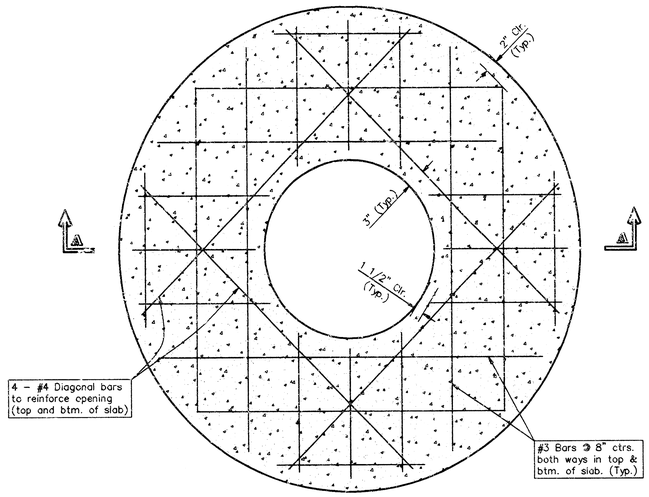

PLAN

GENERAL NOTES

1. Mortar used in masonry construction shall contain 8 sacks of cement per cubic yard. Concrete used in manhole bases shall conform to the requirements of concrete for concrete pavement construction as specified in the city standard paving specifications using city concrete cement mix without air entraining admixture. Mortar shall be placed around the manhole ring as shown on the drawings when manholes are constructed in unpaved areas. Manholes constructed where pipe sizes are smaller than 24" shall have an inside diameter of 4'. Manholes constructed where pipe sizes are 24" or larger shall have an inside diameter of 5'. Completed manhole shall be without leaks and water tight.

2. Reinforcing steel shall be installed in the manhole bases and shall consist of no. 4 bars placed on 6" centers in both directions. The manhole base reinforcement shall be placed 6" above the bottom of the manhole base. All costs for furnishing and installing reinforcing steel shall be included in the unit price bid for the manhole.

3. The floors of all manholes shall be shaped with flow channels such that the manholes will be self cleaning and free of areas where solids could be deposited as sewage flows through the manhole from all inlet pipes to the outlet pipe. Flow channels shall be formed to match the bottom halves of the inflowing pipes and the outflowing pipe as shown by the drawings. Manhole floors shall have slopes of 3 inches per foot in the areas outside of the flow channels sloped toward the flow channels. Pipes laid through manholes shall have the top half removed to neat lines for the full inside diameter of the manhole. Manhole floors shall then be shaped around the bottom half of the pipe which forms the flow channel.

4. Pipes installed within the excavation made for the manhole shall be cradled with concrete to the limits of the manhole excavation. When clay pipe is used, the cradle shall extend to the first joint outside the manhole. The cradle shall be terminated at the clay pipe joint in a manner which will maintain the flexibility of the joint. Cost of cradle within manhole excavation or to clay pipe joints adjacent to manhole shall be included in the unit price bid for the manhole.

5. Manhole cover castings and manhole frame castings shall conform to the requirements as indicated in the standard specifications and as shown in the standard detail drawings.

6. The crowns of inflowing pipes shall never be set lower than the crown of the outflowing pipe.

7. Standard shallow manholes type "P" and "C" shall be paid for at the unit price bid per each for the type and diameter indicated. All standard shallow manhole diameters will be 4' unless indicated otherwise.

8. All brick used in manhole construction shall meet Grade SW of ASTM C652 or C62-87.

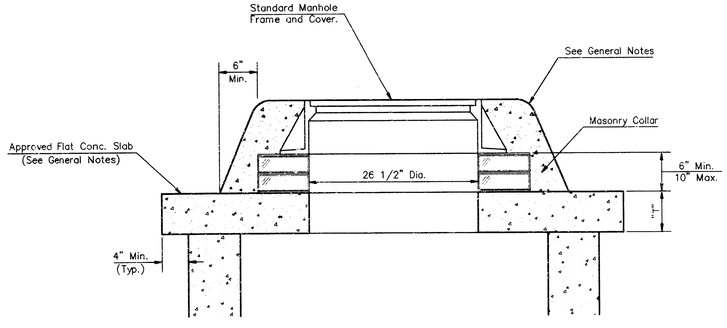

MASONRY COLLAR DETAIL

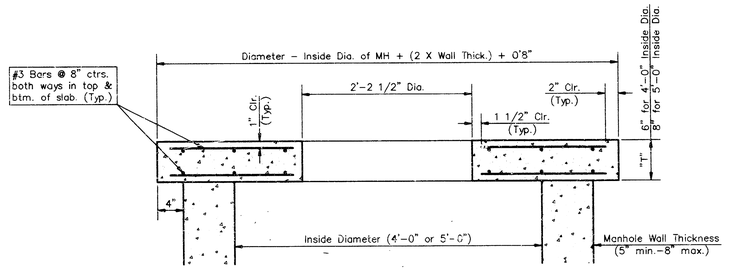

SECTION A–A

FLAT CONCRETE SLAB DETAILS

CITY OF WICHITA

Std. Manhole Detail

BAUGHMAN COMPANY P.A.

ENGINEERING, SURVEYING, & PLANNING

316-262-7271 • 315 ELLIS • WICHITA, KANSAS 67211

PROJECT NUMBER				SHEET
825PPS(607861)				12 of 13
DESIGN STAFF	DRAWN STAFF	APPROVED	DATE	SCALE NONE

04-0

OSTEOPATHIC ADDITION

TO WICHITA KANSAS

State of Kansas } S.S.
Sedgwick County }

I, Clyde M. Baughman, Surveyor in aforesaid county and state do hereby certify that I have surveyed and platted "OSTEOPATHIC ADDITION" to Wichita, Kansas and that the accompanying plat is a true and correct exhibit of the property surveyed described as follows: Beginning 40 feet North and 1898.3 feet East of the S.W. Corner of the S.E. 1/4 of Sec. 13 Twp. 27 S.; R-1-W.; thence north parallel with the West line of said 1/4 Sec. 110 feet; thence West parallel with the South line of said 1/4 Sec. 25.0 feet; thence North parallel with the West line of said 1/4 Sec. 2040.07 feet to a point 330 feet South of the North line of said 1/4 Sec.; thence East parallel with the North line of said 1/4 Sec. 205.23 feet to the intersection of a curve having a radius of 807.77 feet; thence southerly 171.67 feet and through a central angle of 12° 10' - 37" to the point of tangency of said curve; thence along tangent to said curve 70.25 feet to the point of curvature of a curve to the left having a radius of 1334.53 feet; thence southerly along said curve and through a central angle of 38° 1' a distance of 891.34 feet to the point of tangency of said curve; thence along tangent to said curve 657.56 feet to the point of curvature of a curve to the left having a radius of 7986.2 feet, thence southerly along said curve and through a central angle of 1° 11' 12" a distance of 165.4 feet; thence southerly 370.2 feet to a point 40 feet north of the south line of said 1/4 Sec. and 117.63 feet east of the centerline of Meridian Avenue (as now exists) as extended to the north; thence West 838.38 feet to the place of beginning.

Clyde M. Baughman, Surveyor

Know all men by these presents that we, The Osteopathic Hospital of Wichita, a corporation by R.L. Wright, President and Bess Cavenaugh, Secretary has caused the land described in the surveyors certificate to be platted into blocks and avenues to be known as "OSTEOPATHIC ADDITION" to Wichita, Kansas. Edwards Avenue, Murdock Avenue and a 150 foot strip for Central Avenue are hereby dedicated to and for the use of the public.

Complete access control to Central from that portion of Block 1, Osteopathic Addition, extending from the West line of McLean to the East line of Richmond Avenue as extended to the north is hereby granted to the City of Wichita.

Complete access control from Blocks 1 & 2, Osteopathic Addition to McLean Boulevard is hereby granted to the City of Wichita.

Osteopathic Hospital of Wichita, a corporation

Robert L. Wright, President

Bess Cavenaugh, Secretary

State of Kansas } S.S.
Sedgwick County }

Be it remembered that on this 26th day of October 1961 before me a notary public in aforesaid county and state came R. L. Wright President and Bess Cavenaugh, Secretary of The Osteopathic Hospital of Wichita, a corporation, to me known to be the same persons who executed the foregoing instrument of writing and duly acknowledged the execution of the same. In testimony whereof I have hereunto set my hand and affixed my notarial seal the day and year above written.

Clara M. Eagen, Notary Public

My Commission Expires Oct 5, 1962

This plat of "OSTEOPATHIC ADDITION" to Wichita, Kansas has been submitted to and considered by the Wichita-Sedgwick County Metropolitan Area Planning Commission and is hereby transmitted to the Board of City Commissioners with the recommendation that such plat be approved as proposed. Dated this 28th day of May, 1961.

The Wichita-Sedgwick County Metropolitan Area Planning Commission.

Richard Jennings, Chairman

A. A. Smith, Secretary

Approved by the Board of City Commissioners this 14th day of December 1961.

Herbert O. Lindsay, Mayor

C. M. Frank, City Clerk.

Approved by the Board of County Commissioners this 1st day of December 1961.

H. O. Williams, County Clerk

Entered on transfer record this 1st day of December 1961.

H. O. Williams, County Clerk

24372

State of Kansas } S.S.
Sedgwick County }

This is to certify that this plat was filed for record in the office of the Register of Deeds this 1st day of December, 1961, at 11:00 o'clock a M; and is duly recorded.

Rufus E. Deering, Register of Deeds

C. C. Dilbert, Deputy

