STORM WATER SEWER IMPROVEMENTS TO SERVE
BRUSH CREEK 3RD ADDITION
PHASE 1

Private Project Number
842 PPS (607861)

CITY OF WICHITA, KANSAS
Michael E. Lindebak, P.E. City Engineer

GENERAL NOTES:

1. Contractor will be required to provide notice to utility companies a minimum of twenty-four (24) hours prior to any excavation, as follows:

   Kansas One-Call 687-2470

   The Contractor must notify the following in case of an emergency:

Multimedia Cablevision	262-0661
K.P.L. Gas Service Company	383-8650
Kansas Gas & Electric Company	383-6600
Peoples Gas Company	942-8350
Southwestern Bell Telephone Company	1-571-2611
City of Wichita Water Dept.	268-4908
City of Wichita Traffic Engineering	269-4446

2. Underground utility service lines and overhead utility pole lines are to be adjusted as necessary by others prior to construction unless the plans specifically call for their adjustment by the Contractor or unless the plans specifically identify a utility to be adjusted by its owner during construction. Existing utilities and their location, as shown on the plans, represent the best information obtainable for design. The Contractor will be required to work around existing utilities within the right-of-way which do not conflict with proposed construction.

3. Trees and shrubs in public right-of-way which are in direct conflict with proposed new construction shall be removed by the Contractor with the Engineer's approval. Trees and shrubs which are not in direct conflict with proposed new construction shall be saved and protected from damage.

4. The Contractor shall be responsible for preserving property irons. The Contractor will be required to re-establish any property irons which are damaged or destroyed by his construction operations. Such irons shall be re-established by a licensed land surveyor in accordance with state laws.

5. All areas disturbed by construction operations shall by seeded with rye grass at a rate of 300 lbs/acre immediately following construction in that area. Prior to seeding, area shall be prepared per City specs.

6. Trees and shrubs in public right-of-way which are in direct conflict with proposed new construction shall be removed by the Contractor with the Engineer's approval. Trees and shrubs which are not in direct conflict with proposed new construction shall be saved and protected from damage.

7. Rubble from the removal of miscellaneous structures and excess excavation which is to be wasted shall be disposed of on sites to be provided by the Contractor. These sites shall be approved by the Engineer as to suitability, appearance and site location. Locations that, in the opinion of the Engineer, will leave an unsightly appearance will not be approved.

8. Coordinate staking will be provided by Baughman Company, P.A.

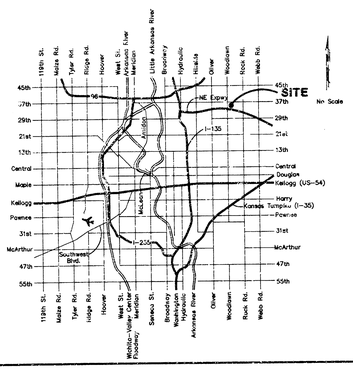

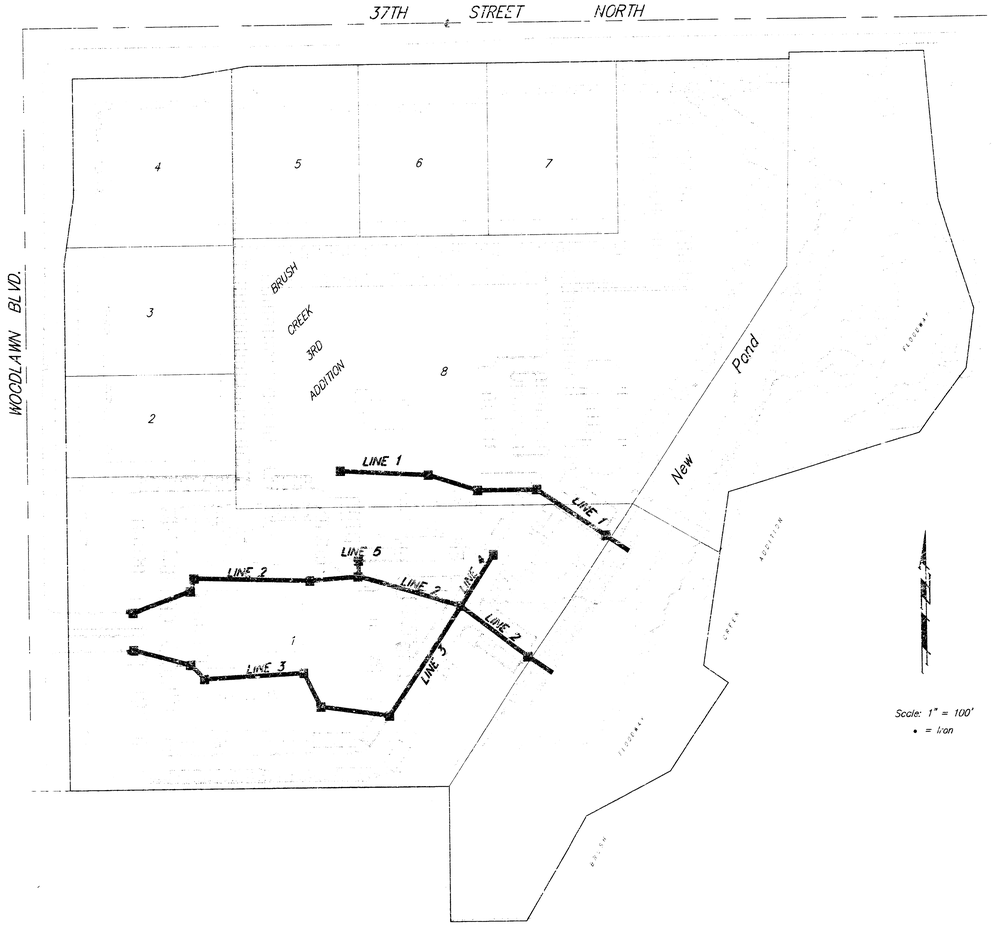

BENCHMARK:

CITY OF WICHITA BENCHMARK DISC - WOODLAWN AND 37TH ST. N.U. SE. COR. OF INTERSECTION, 73.7' E. & 56.3' S. OF E. BOTH.
ELEVATION = 1183.04 (CITY DATUM)

INDEX:

1. Cover Sheet
2. Line 1, Plan / Profile
3. Line 2 & Line 5, Plan / Profile
4. Line 2 Cont., Plan / Profile
5. Line 3, Plan / Profile
6. Line 3 Cont., Plan / Profile
7. Line 4, Plan / Profile
8. Standard Drop Inlet Detail
9. Standard Type 2 Inlet Detail
10. Brush Creek 3rd Addition Plat

BOOKED 1-26-00 Maia D-470

APPROVED AS NOTED
BY CITY ENGINEER OF WICHITA
Storm Sewers 6/13/98

NOTE TO CONTRACTORS

Inspection and testing for this project is to be provided by a Licensed Consulting Engineering Firm under contract with the Owner/Developer. Said inspection to be in accordance with the City of Wichita standard construction engineering practices and certified by a Licensed Professional Engineer. No work shall be performed in dedicated easements or public right-of-way by the Contractor without such inspection nor shall any work be commenced without written authorization by the City Engineer. All Construction and Materials shall comply with the City of Wichita Specifications and Standards (on file and available in the City Engineer's Office).

DAVID L. VAUGHAN LICENSED 14709 5/27/98 KANSAS PROFESSIONAL ENGINEER

David L. Vaughan

PROJECT INSPECTED & ASBUILT BY BAUGHMAN
ASBUILT 1/99 DLV
AUGUST 1998

BAUGHMAN COMPANY P
ENGINEERING, SURVEYING & PLANNING
316-264-7271 • 315 ELLIS • WICHITA, KANSAS 67211

BENCHMARK:

City of Wichita Benchmark Disc – Woodlawn and 37th Street North, S.E. Corner of intersection 75.7' east & 56.3' south of centerline, both.

SCALE:
1" = 20' HORIZ
1" = 5' VERTIC
• = IRON

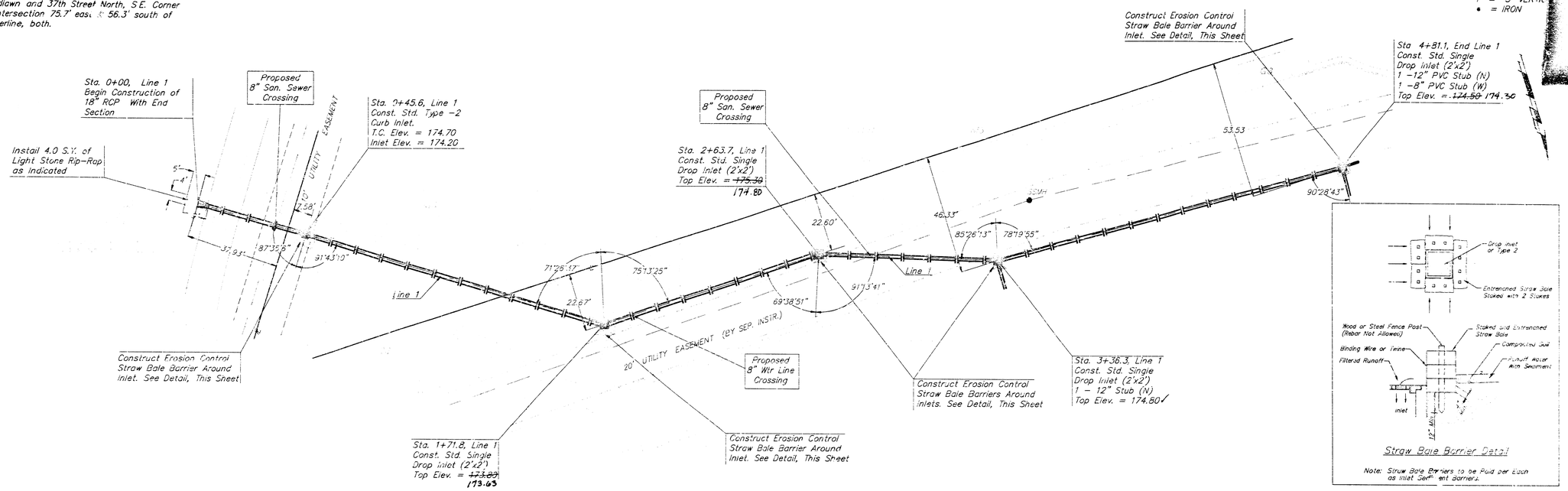

Straw Bale Barrier Detail

Note: Straw Bale Barriers to be Paid per Each as Inlet Sediment Barriers.

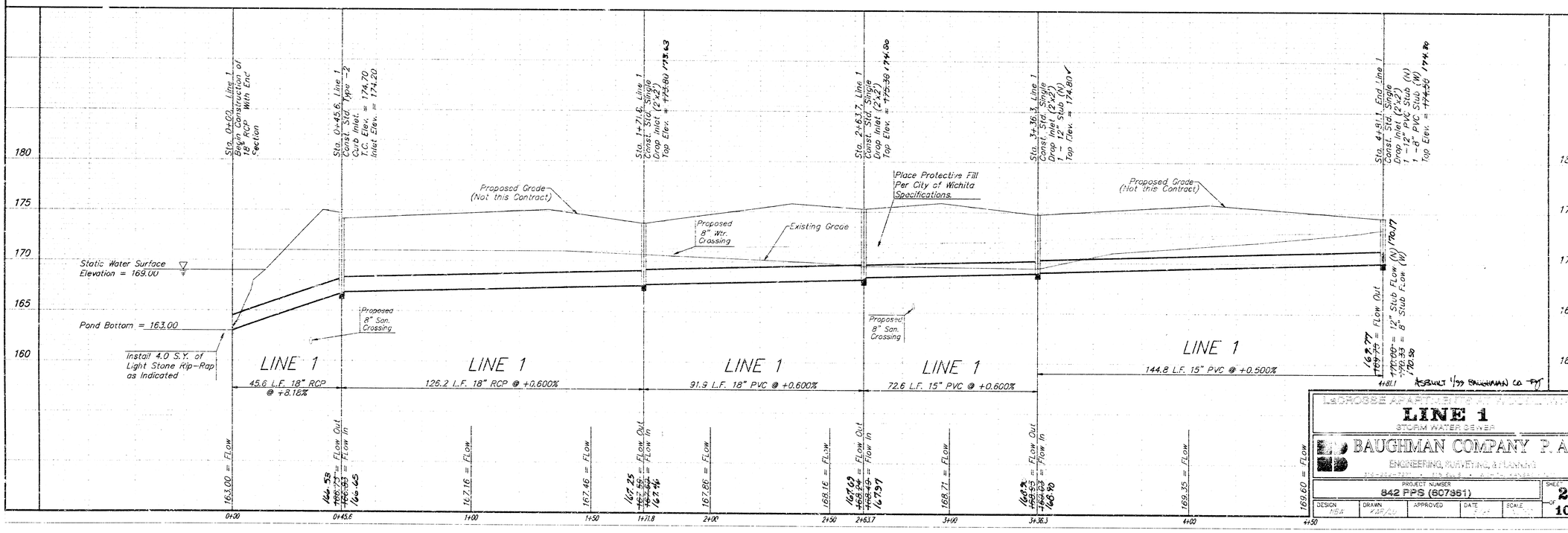

L. SCHOSSE APARTMENTS ADDITION

LINE 1

STORM WATER SEWER

BAUGHMAN COMPANY P.A.

ENGINEERING, SURVEYING, & PLANNING

PROJECT NUMBER				SHEET
842 PPS (607361)				2
DESIGN MBA	DRAWN	APPROVED	DATE	SCALE

OF 10

BENCHMARK:

City of Wichita Benchmark Disc – Woodlawn and 37th Street North, S.E. Corner of intersection 75.7' east & 56.3 south of centerline, both.

SCALE:
1" = 20' HORIZO
1" = 5' VERTIC
• = IRON

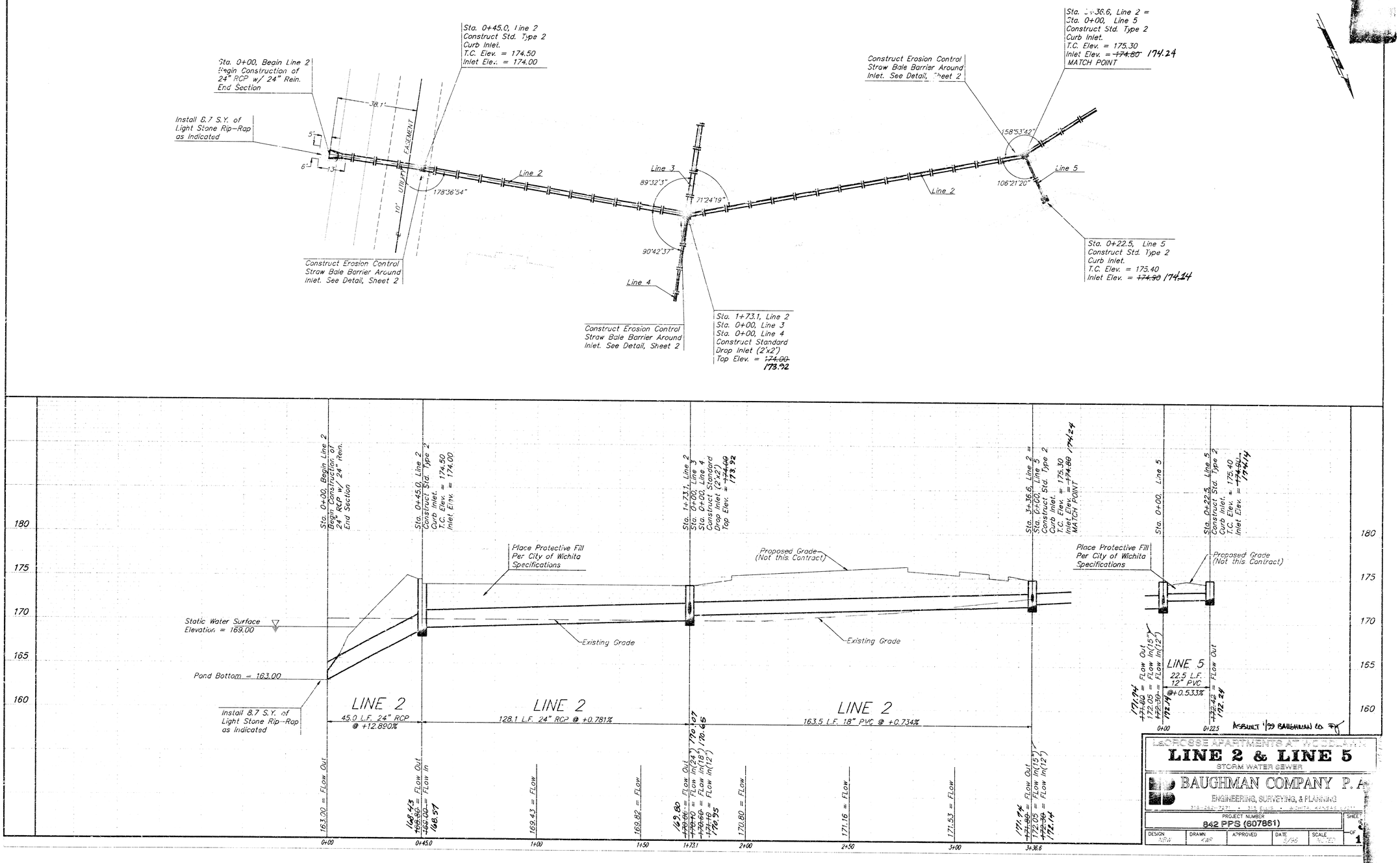

ASBUILT 1/99 BAUGHMAN CO. FY

LaCROSSE APARTMENTS AT WOODLAWN

LINE 2 & LINE 5

STORM WATER SEWER

BAUGHMAN COMPANY P. A.

ENGINEERING, SURVEYING, & PLANNING

318-262-7271 • 315 ELLIS • WICHITA, KANSAS 67211

PROJECT NUMBER					SHEET
842 PPS (607861)					1 OF
DESIGN	DRAWN	APPROVED	DATE	SCALE	
NBW	KWP		5/96	NOTED	

BENCHMARK:

City of Wichita Benchmark Disc – Woodlawn and 37th Street North, S.E. Corner of intersection 75.7' east & 56.3' south of centerline, both.

SCALE:
1" = 20' HORIZ
1" = 5' VERT
• = IRON

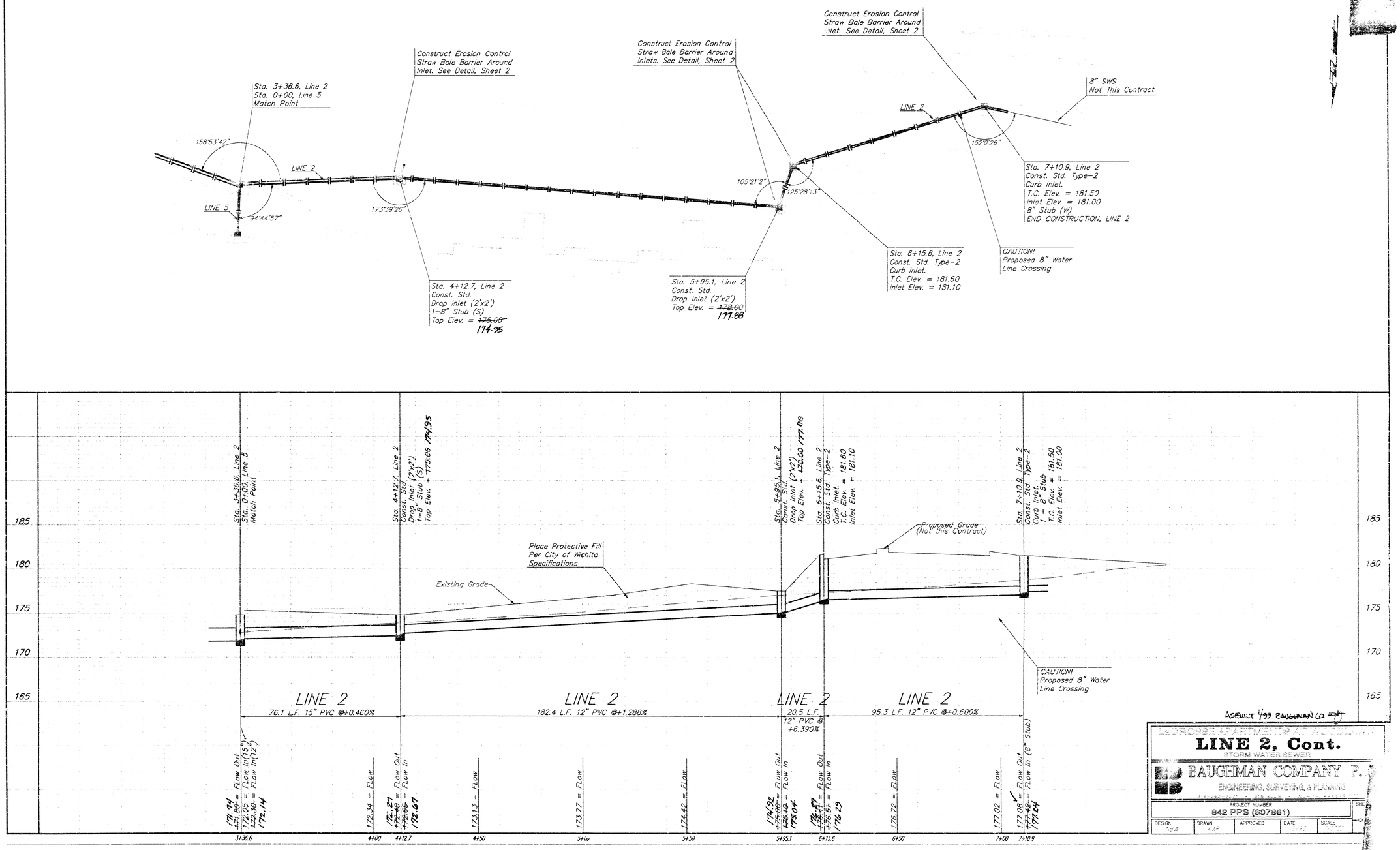

ASBUILT 1/99 BAUGHMAN CO

LINE 2, Cont.

STORM WATER SEWER

BAUGHMAN COMPANY P.A.

ENGINEERING, SURVEYING, & PLANNING

PROJECT NUMBER
842 PPS (607861)

DESIGN	DRAWN	APPROVED	DATE	SCALE
NEW	KAP			

BENCHMARK:

City of Wichita Benchmark Disc – Woodlawn and 37th Street North, S.E. Corner of intersection 75.7' east & 56.3' south of centerline, both.

SCALE:
1" = 20' HORIZO
1" = 5' VERTICA
• = IRON

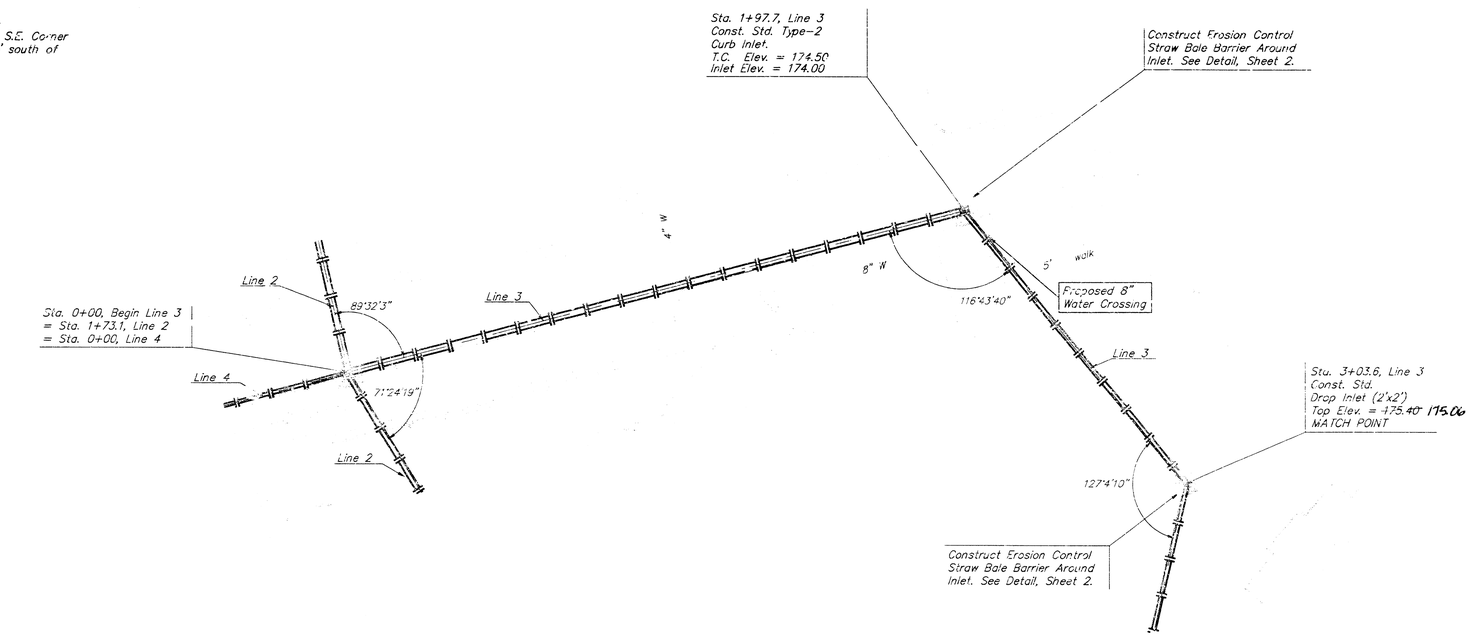

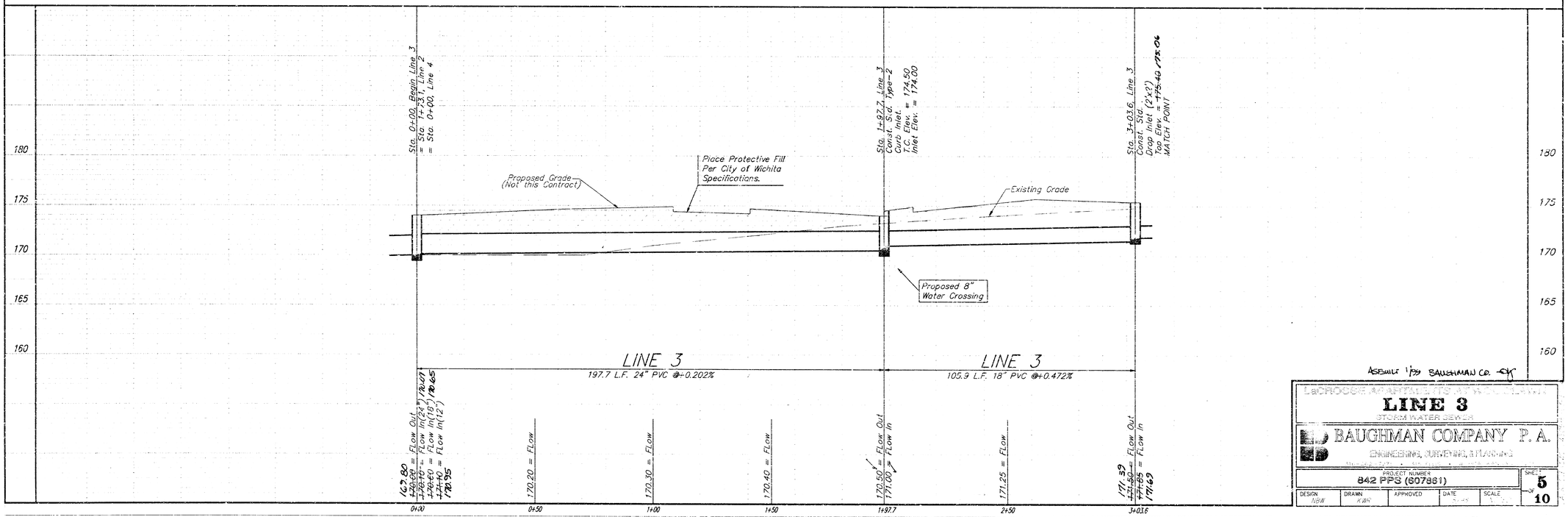

ASBUILT 1/99 BAUGHMAN CO. CK

LaCROSSE APARTMENTS AT WOODLAWN

LINE 3

STORM WATER SEWER

BAUGHMAN COMPANY P.A.

ENGINEERING, SURVEYING, & PLANNING

PROJECT NUMBER	SHEET
842 PPS (607861)	5 OF 10

DESIGN	DRAWN	APPROVED	DATE	SCALE
NBW	KWR			

BENCHMARK:

City of Wichita Benchmark Disc – Woodlawn and 37th Street North, S.E. Corner at intersection 75.7' east & 56.3' south of centerline, both.

SCALE:
1" = 20' HORIZONTAL
1" = 5' VERTICAL
• = IRON

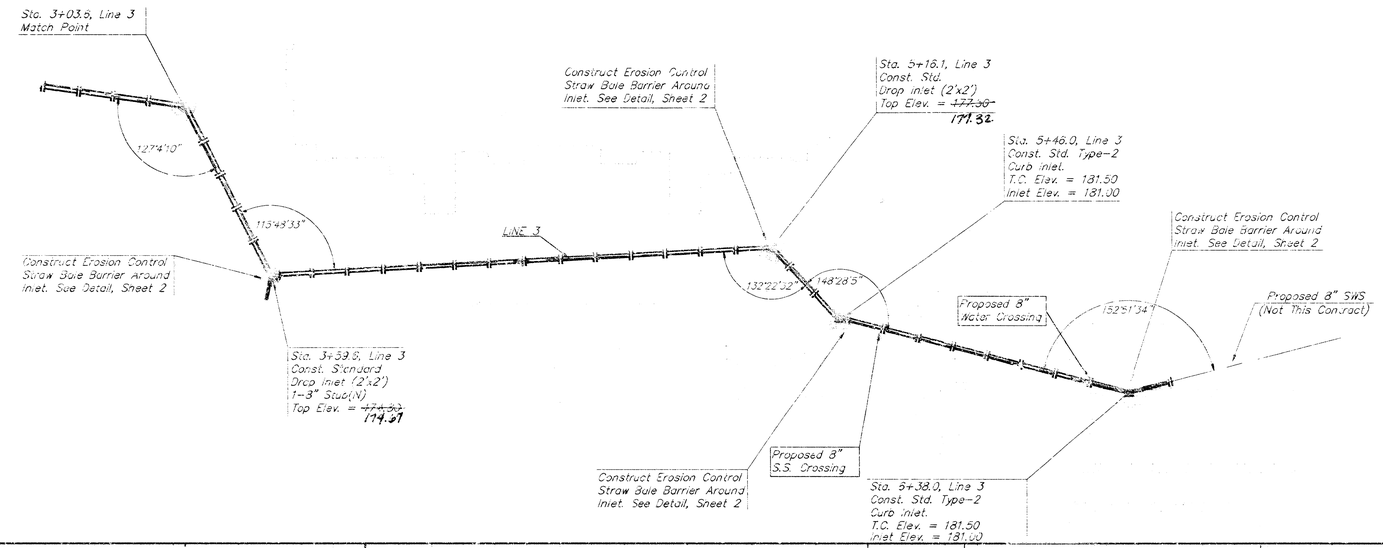

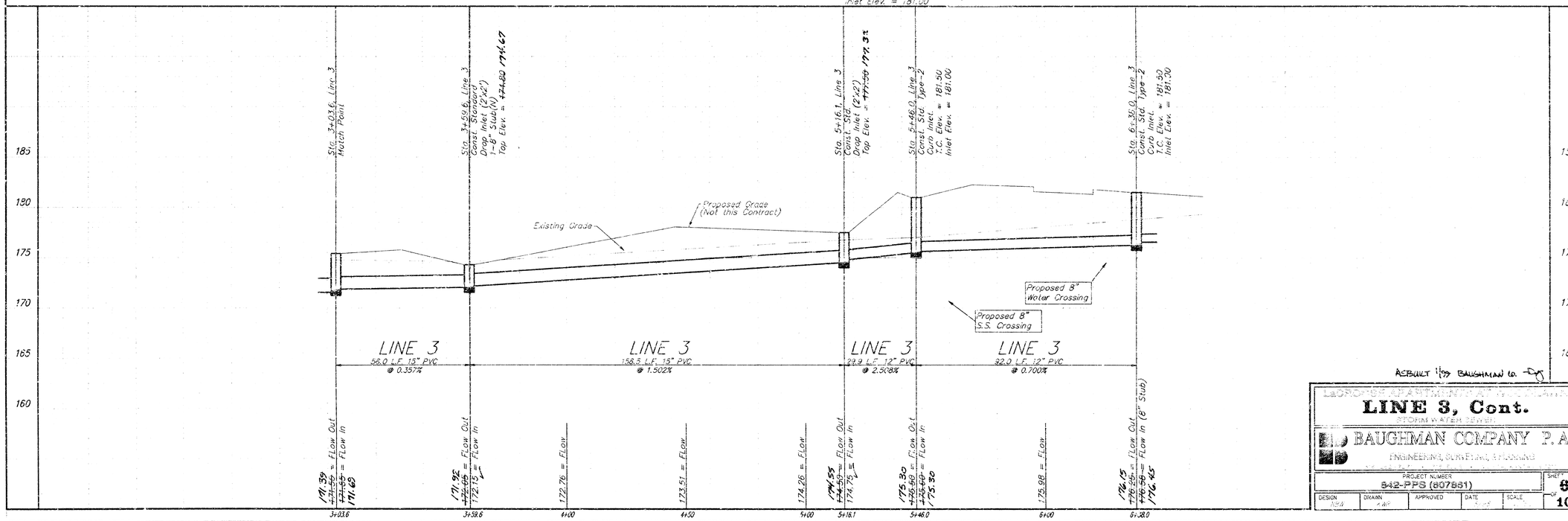

ACCEPTED BY BAUGHMAN CO.

LINE 3, Cont.

STORM WATER SEWER

BAUGHMAN COMPANY P.A.
ENGINEERING, SURVEYING, PLANNING

PROJECT NUMBER	SHEET
342-PPS (807681)	5

DESIGN	DRAWN	APPROVED	DATE	SCALE	OF
NSA	AMF				10

BENCHMARK:

City of Wichita Benchmark Disc – Woodlawn and 37th Street North, S.E. Corner of intersection 75.7' east & 56.3' south of centerline, both.

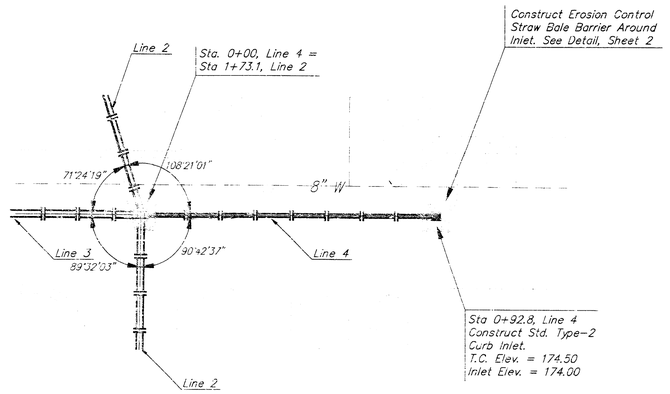



SCALE:
1" = 20' HORIZONTAL
1" = 5' VERTICAL
• = IRON

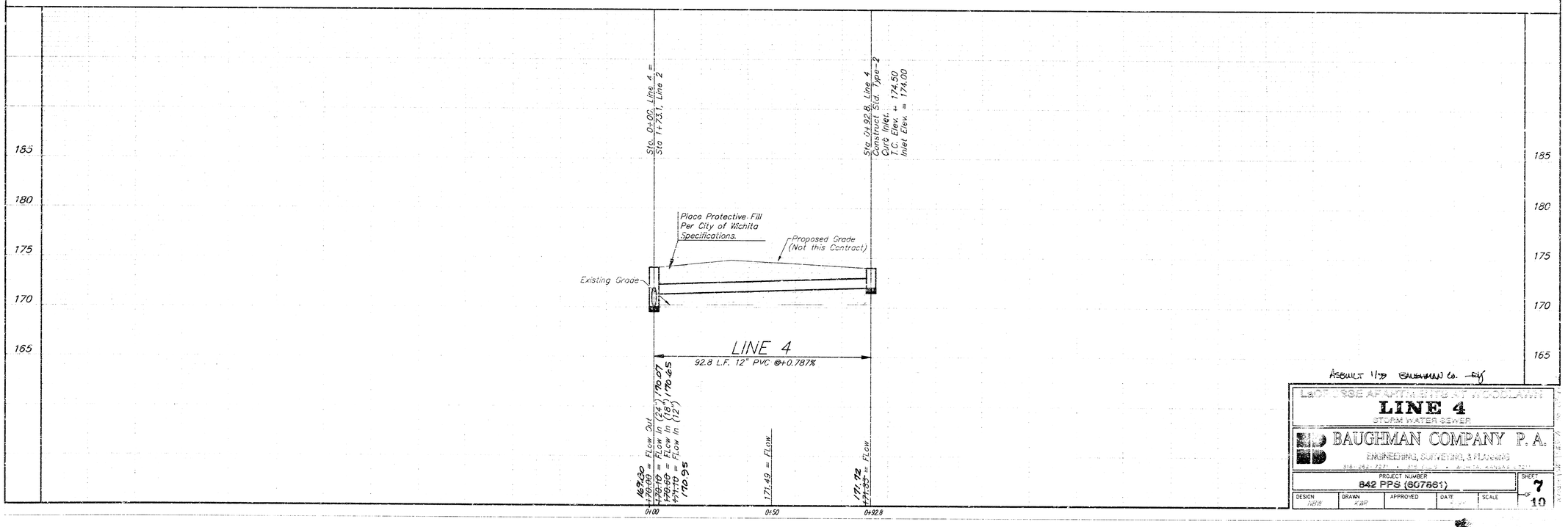

ASBUILT 1/99 BAUGHMAN Co. -RJ

LaCROSSE APARTMENTS AT WOODLAWN

LINE 4

STORM WATER SEWER

BAUGHMAN COMPANY P. A.

ENGINEERING, SURVEYING, & PLANNING

318-262-7271 • 315 EAST • WICHITA, KANSAS 67211

PROJECT NUMBER					SHEET
842 PPS (607661)					7 OF 10
DESIGN NBW	DRAWN KWP	APPROVED	DATE	SCALE	

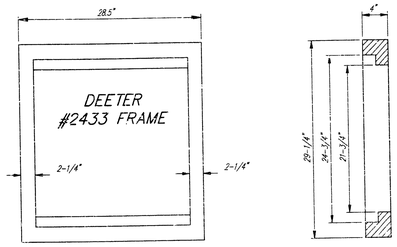

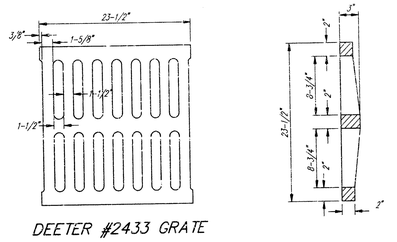

DEETER #2433 GRATE

NOTE: Grates shall be imprinted on the top surface with "CITY OF WICHITA" using letters at least 1" in height. Other marking methods may be approved by the engineer.

24" x 24" Frame and Grate Detail

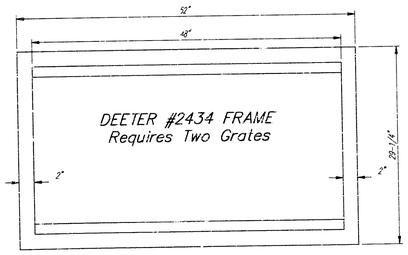



Double 24" x 24" Frame Detail

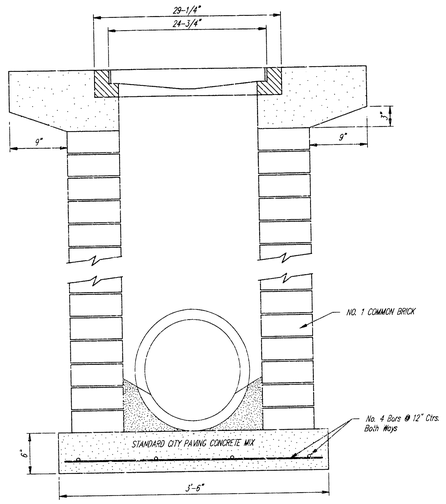

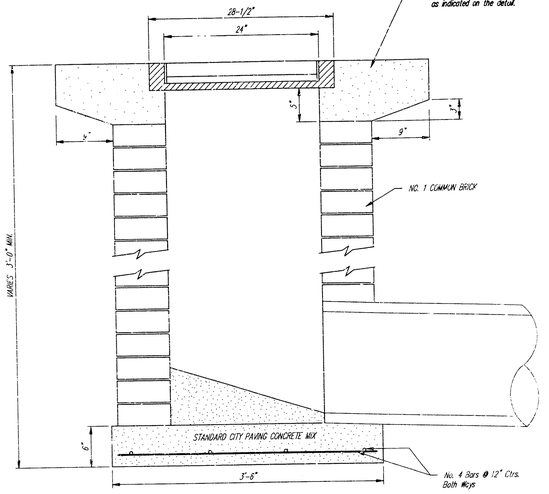

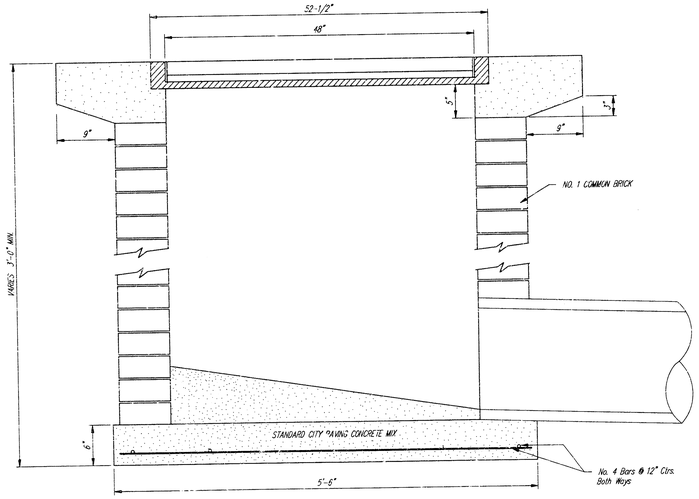

City of Wichita Standard

Drop Inlet

BAUGHMAN COMPANY P. A.

ENGINEERING, SURVEYING & PLANNING

316-262-7271 • 315 ELLIS • WICHITA, KANSAS

PROJECT NUMBER				SHEET
842 PPS (607861)				8 of 10
DESIGN	DRAWN	APPROVED	DATE	SCALE
C.O.W.	Staff		3/98	

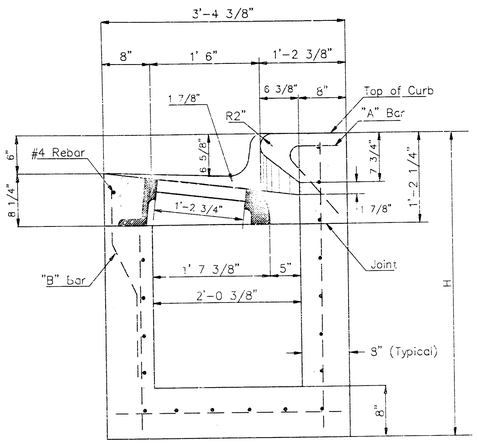

SECTION A-A

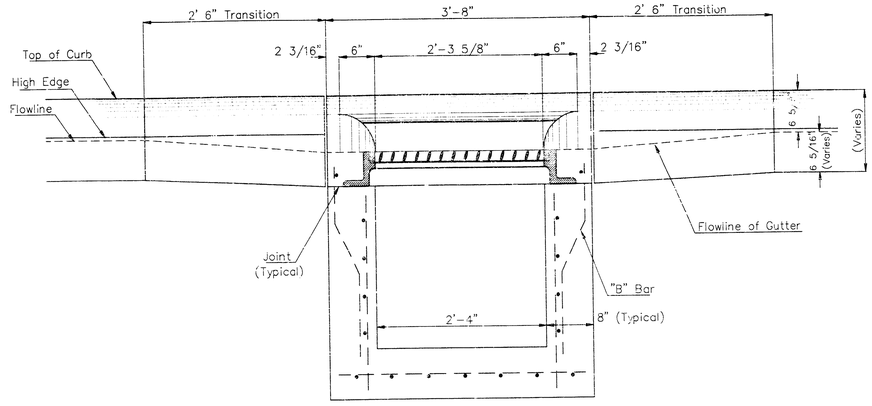

SECTION C-C

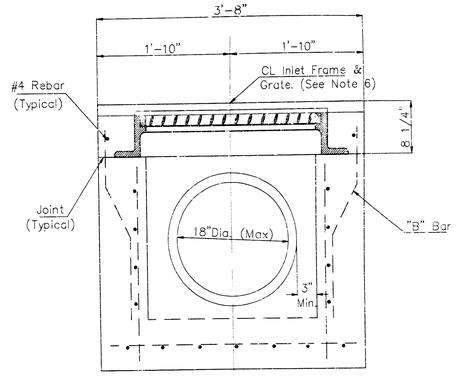

SECTION D-D

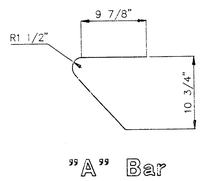

"A" Bar

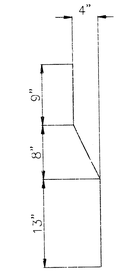

"B" Bar

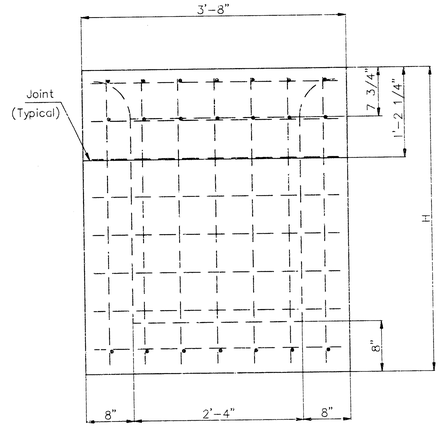

REAR WALL

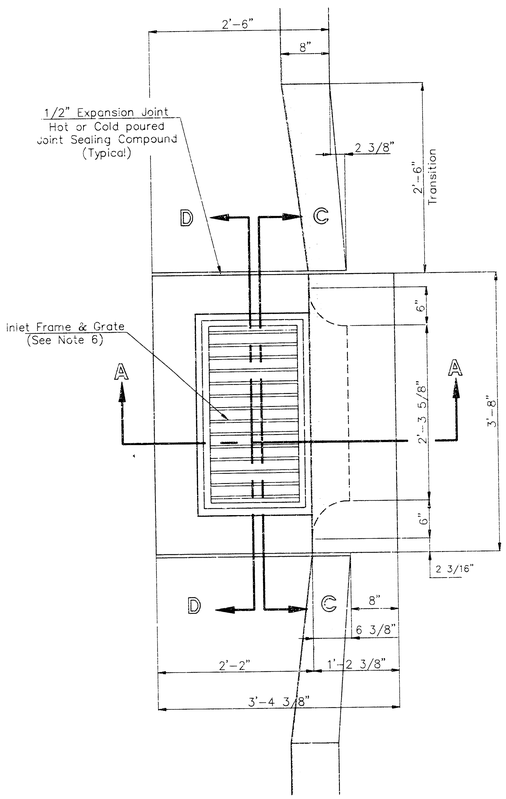

General Notes

1. Use the concrete mix specified for the City of Wichita concrete pavement throughout. All exposed edges shall be finished with an edging tool. Reinforcing bars shall be bent around pipe.
2. Inlet invert shall be shaped with 8 sack mix concrete to create flow channels and to increase hydraulic efficiency such that the inlet will be self cleaning between all inlet and/or outlet pipes.
3. All bars are #4 with 6" spacing and shall have a minimum clearance of 1 1/2" inches unless otherwise noted on the plans.
4. When directed by the Engineer, a small opening may be required in the back of the inlet in order to drain a low area. Reinforcing bars will extend through the openings. No deductions in concrete quantities will be made for these openings.
5. No deductions will be made in pay length of curb, gutter, or curb and gutter through the inlet area.
6. Use Neenah R-3289 HV Single Inlet Frame and Grate or approved equal. Inlet frame to be proof load tested to 40,000 lbs. on unsupported side.
7. Reinforcing bars shall be cut or bent around pipes. No deduction in concrete quantities shall be made for pipe openings.
8. The vanes of the grate shall be oriented with respect to the flow arrows shown on the plans.

Recrawn Jan.1992

CITY OF WICHITA

STD. TYPE II CURB INLET

INLET OPENINGS = 8" X 2'-3 5/8"

BAUGHMAN COMPANY P.A.

ENGINEERING SURVEYING

	842	SHEET 9 OF 10
DESIGN	DRAWN JAN.'97	

BRUSH CREEK 3RD ADDITION

WICHITA, SEDGWICK COUNTY, KANSAS

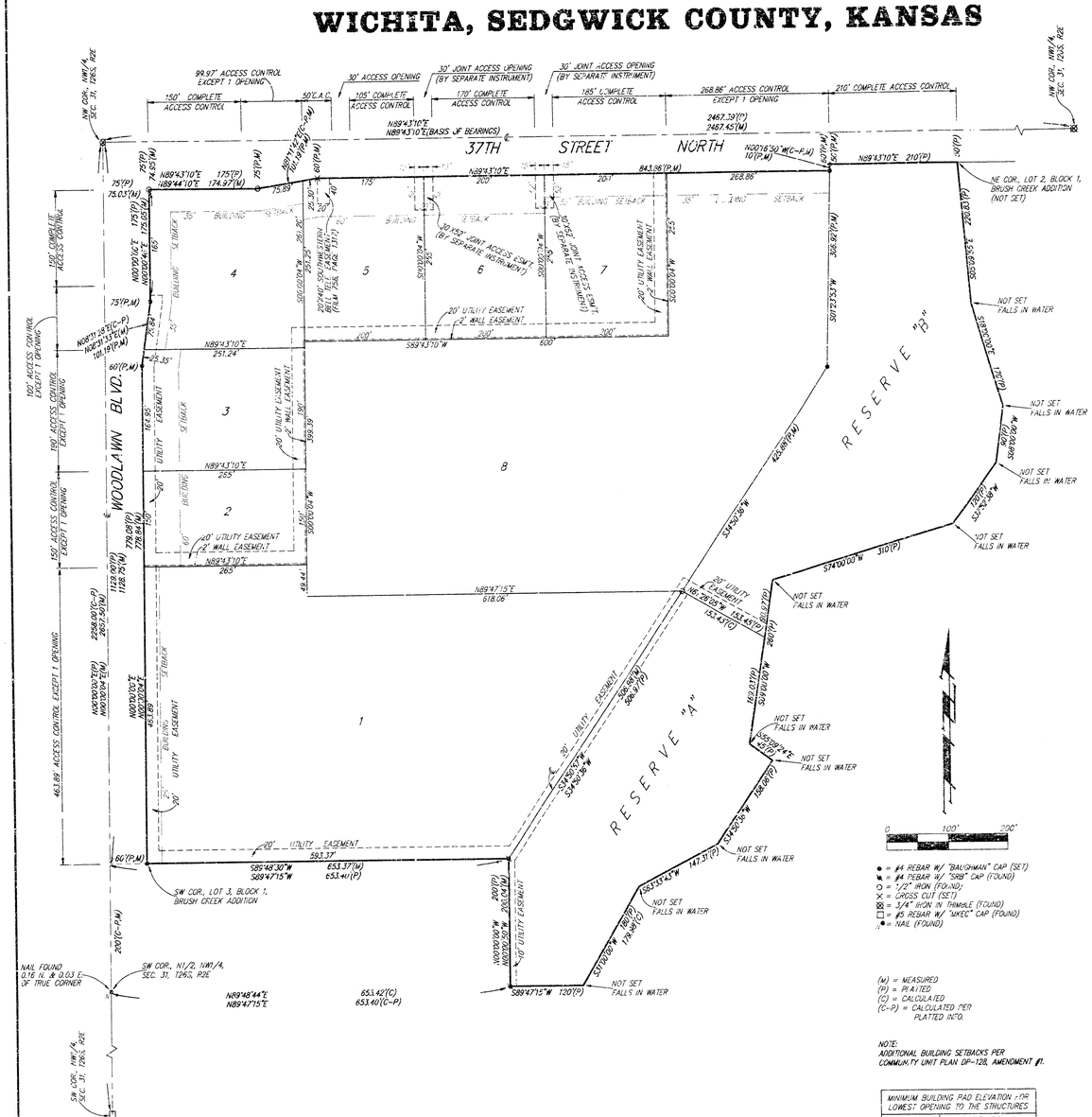
37TH STREET NORTH
WOODLAWN BLVD.
RESERVE "A"
RESERVE "B"
1
2
3
4
5
6
7
8
NW COR. NW1/4 SEC. 31, T26S, R2E
SW COR. NW1/4 SEC. 31, T26S, R2E
SW COR., LOT 3, BLOCK 1, BRUSH CREEK ADDITION
NE COR., LOT 2, BLOCK 1, BRUSH CREEK ADDITION (NOT SET)
SW COR., N1/2, NW1/4, SEC. 31, T26S, R2E
NAIL FOUND 0.16' N. & 0.03' E. OF TRUE CORNER
99.97' ACCESS CONTROL EXCEPT 1 OPENING
30' ACCESS OPENING
30' JOINT ACCESS OPENING (BY SEPARATE INSTRUMENT)
268.86' ACCESS CONTROL EXCEPT 1 OPENING
210' COMPLETE ACCESS CONTROL
150' COMPLETE ACCESS CONTROL
105' COMPLETE ACCESS CONTROL
170' COMPLETE ACCESS CONTROL
185' COMPLETE ACCESS CONTROL
50' C.A.C.
N89°43'10"E (BASIS OF BEARINGS)
N89°43'10"E 843.86'(P,M)
2467.39'(P) 2467.45'(M)
N00°16'50"W 10'(P,M)
S89°43'10"E 210'(P)
N89°43'10"E 175'(P) N89°44'10"E 174.97'(M)
N89°43'10"E 251.24'
S89°43'10"W 600'
S89°48'30"W 593.37'
653.41'(P)
653.42'(C)
653.40'(C-P)
N89°48'44"E
N89°47'15"E
S89°47'15"W 120'(P)
N89°47'15"E 618.06'
S74°50'56"W 420.58'(M)
S74°00'00"W 310'(P)
S89°47'15"W 368.92'(M)
S89°13'53"W 368.92'(M)
S00°00'04"E 1270'(P)
S89°59'56"E 210.83'(P)
S00°00'04"E 255'
S00°00'04"W 255'
S00°00'04"W 200'(P,M)
N00°00'04"E 463.89'(M)
N00°16'50"W 463.89'(P)
N00°00'04"E 463.89'
N00°00'04"E 2638.35'(M)
2638.35'(P)
N00°00'04"E 1128.78'(M)
1129.90'(P)
N00°00'04"E 728.84'(M)
729.08'(P)
N00°00'04"E 165'
N00°00'04"E 251.29'
N00°00'04"E 200'(P,M)
N00°00'04"W 200'(C-P,M)
N00°00'04"W 200'(P,M)
N00°00'04"W 200'(C-P,M)
N89°43'10"E 175'(P) N89°44'10"E 174.97'(M)
N89°43'10"E 265'
N89°43'10"E 255'
S89°43'10"W 599.39'
S00°16'50"E 150'
S00°00'04"E 150'
S00°00'04"E 165'
S00°00'04"E 200'(C-P,M)
S00°00'04"E 200'(P,M)
S00°00'04"E 200'(C-P,M)
S00°00'04"E 463.89' ACCESS CONTROL EXCEPT 1 OPENING
150' ACCESS CONTROL EXCEPT 1 OPENING
100' ACCESS CONTROL EXCEPT 1 OPENING
150' ACCESS CONTROL EXCEPT 1 OPENING
100' ACCESS CONTROL EXCEPT 1 OPENING
N89°47'15"E 49.44'
N89°47'15"E 153.45'(P)
N89°47'15"E 153.43'(C)
S89°47'15"W 179.98'(P)
S89°47'15"W 179.98'(C)
S89°47'15"W 147.31'(P)
S89°47'15"W 147.31'(C)
S89°47'15"W 158.98'(P)
S89°47'15"W 158.98'(C)
S89°47'15"W 45.13'(P)
S89°47'15"W 45.13'(C)
S89°47'15"W 526.98'(P)
S89°47'15"W 526.98'(C)
S89°47'15"W 266'(P)
S89°47'15"W 266'(C)
S89°47'15"W 310'(P)
S89°47'15"W 310'(C)
S89°47'15"W 420.58'(C)
S89°47'15"W 420.58'(P)
S89°47'15"W 368.92'(C)
S89°47'15"W 368.92'(P)
S89°47'15"W 368.92'(M)
S89°47'15"W 368.92'(C-P)
S89°47'15"W 368.92'(P,M)
S89°47'15"W 368.92'(C-P,M)
S89°47'15"W 368.92'(P)
S89°47'15"W 368.92'(C