PRIVATE STORM WATER SEWER TO SERVE

LOT 2, CHADSWORTH COMMERCIAL 3rd ADDITION

CITY OF WICHITA, KANSAS

Michael E. Lindeback, P.E. City Engineer

Private Project Number

880 PFS (607881)

NOVEMBER, 1998

Sheet Index

Title Sheet	1
Plan / Profile	2
Curb Inlet Detail	3
Copy Of Plat	4

LEGAL DESCRIPTION:

Lot 2 Chadsworth 3rd Commercial Addition, Wichita, Sedgwick County, Kansas

BENCHMARK:

"□" Top Of Curb North Side Of Dillons Building West Of Food Court Drive Thru. Elevation. 164.94 (City Datum)

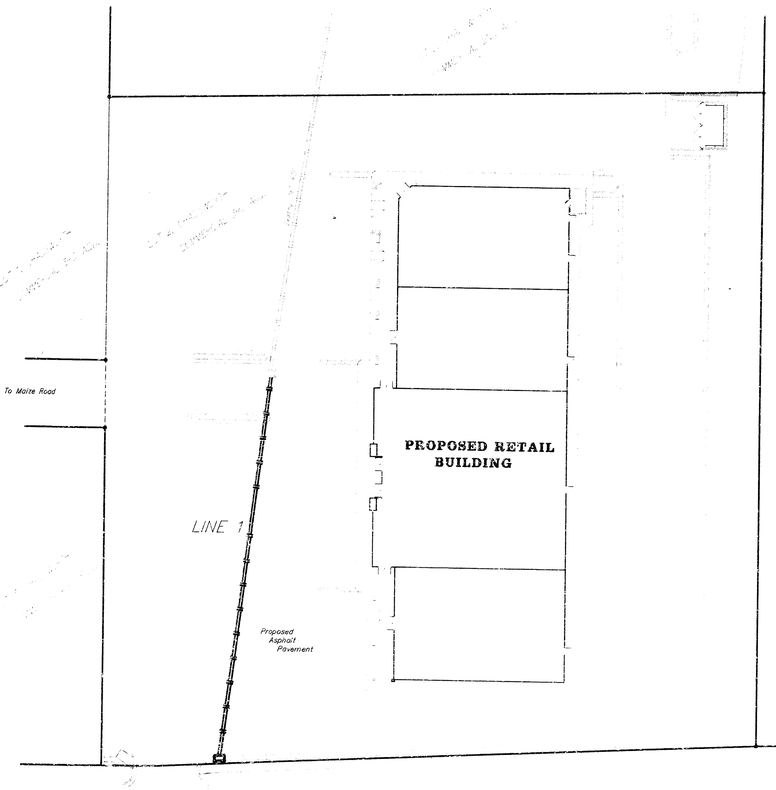

SCALE: 1" = 30'

General Notes:

1. Contractor will be required to provide notice to utility companies a minimum of twenty-four (24) hours prior to any excavation, as follows:

   Kansas One-Call 587-2170

   The Contractor must notify the following in case of an emergency:

Cablevision	262-4270
or	263-2061
Kansas Gas Service Company	832-3121
Kansas Gas & Electric Company	261-6512
Peoples Nat. Gas Company	942-8811
Southwestern Bell Telephone Company	268-2245
City of Wichita Water Department	268-4908
City of Wichita Sewer Maintenance	268-4071

2. Utility service lines, poles, valve boxes, meters, and etcetera are to be adjusted as necessary by others prior to construction unless the plans specifically call for their adjustment by the Contractor or unless the plans specifically identify a utility to be adjusted by its owner during construction. Existing utilities and their location, as shown on the plans, represent the best information obtainable for design. The contractor will be required to work around existing utilities within the right-of-way which do not conflict with proposed construction.

3. Rubble from the removal of miscellaneous structures and excess excavation which is to be wasted shall be disposed of on sites to be provided by the Contractor. These sites shall be approved by the Engineer as to suitability, appearance and site location. Locations that, in the opinion of the Engineer, will leave an unsightly appearance will not be approved. All disposal sites must be approved by the Kansas Department of Health and Environment. Material either stockpiles or disposed of in a flood plain would a Kansas State Board of Agriculture permit. Any material dumped in waters of the United States or wetlands is subject to U.S. Corps. of Engineers permitting regulations. Any material buried or stockpiled beyond approved construction limits would require additional archaeological investigations unless buried in a previously approved borrow location.

4. The Contractor shall be responsible for preserving property irons. The Contractor will be required to re-establish any property irons which are damaged or destroyed by his construction operations. Such irons shall be re-established by a licensed land surveyor in accordance with state law.

SITE — NO SCALE

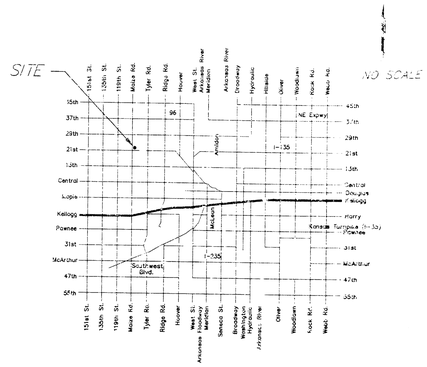

Vicinity Map:

BOOKED 4-5-99 M&S D-420

APPROVED AS NOTED
BY CITY ENGINEER OF WICHITA

Storm Sewers VRH 11/2/98

NOTE TO CONTRACTORS

Installation, inspection and testing for this project is to be provided by a Licensed Consulting Engineering firm under contract with the Owner/Developer. Said inspection to be in accordance with the City of Wichita standard construction engineering practices and certified by a Licensed Professional Engineer. No work shall be performed in dedicated easements or public right-of-way by the Contractor without such inspection nor shall any work be commenced without written authorization by the City Engineer. All Construction and Materials shall comply with the City of Wichita Specifications and Standards (on file and available in the City Engineer's Office).

PROJECT INSPECTED BY BAUGHMAN COMPANY, 2/99
ASBUILT PER PLAN 3/99

BAUGHMAN COMPANY P.A.
ENGINEERING, SURVEYING, & PLANNING

K:\ENGINEER\FILES\PRIVATE\CHADSWORTH\COVER.DWG

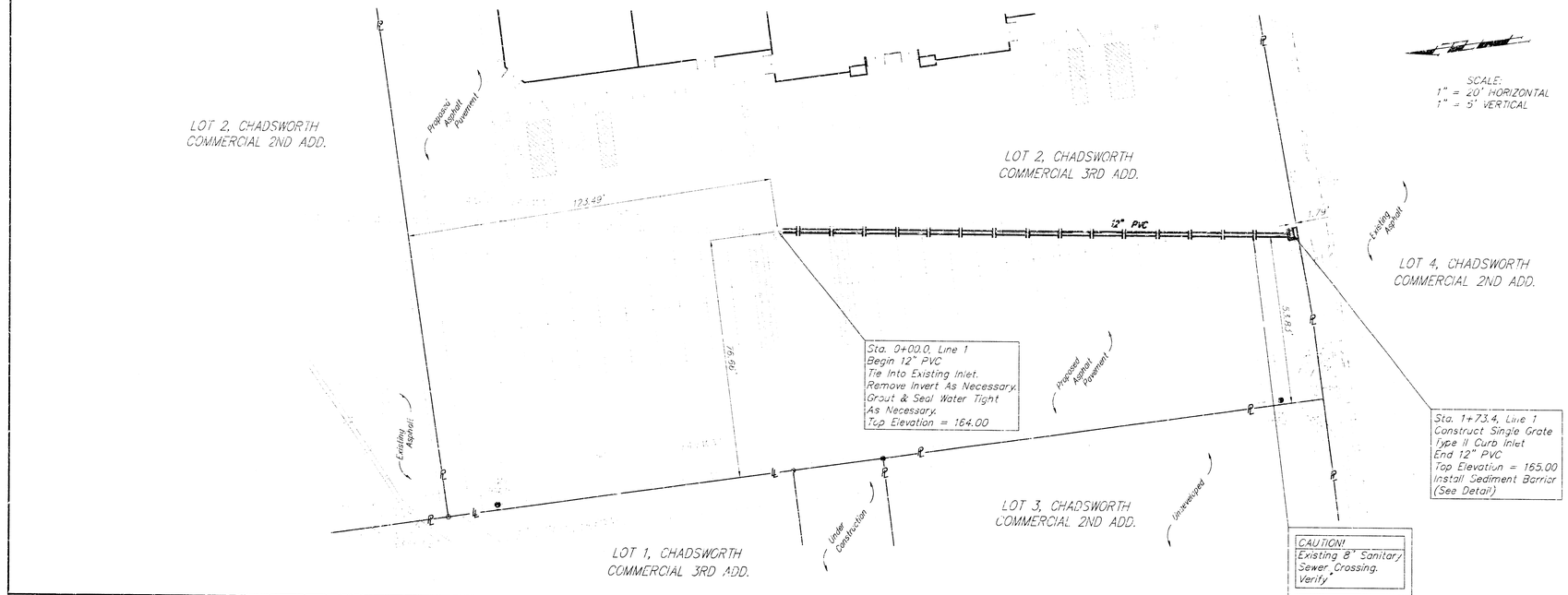

SCALE:
1" = 20' HORIZONTAL
1" = 5' VERTICAL

LEGAL DESCRIPTION:

Lot 2 Chadsworth 3rd Commercial Addition, Wichita, Sedgwick County, Kansas

BENCHMARK:

"□" Top Of Curb North Side Of Doors Building West Of Food Court Drive Thru
Elevation: 164.94

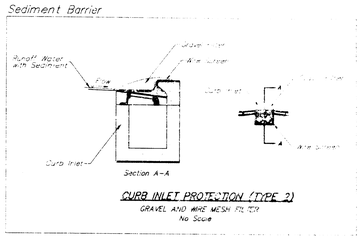

CURB INLET PROTECTION (TYPE 2)
GRAVEL AND WIRE MESH FILTER
No Scale

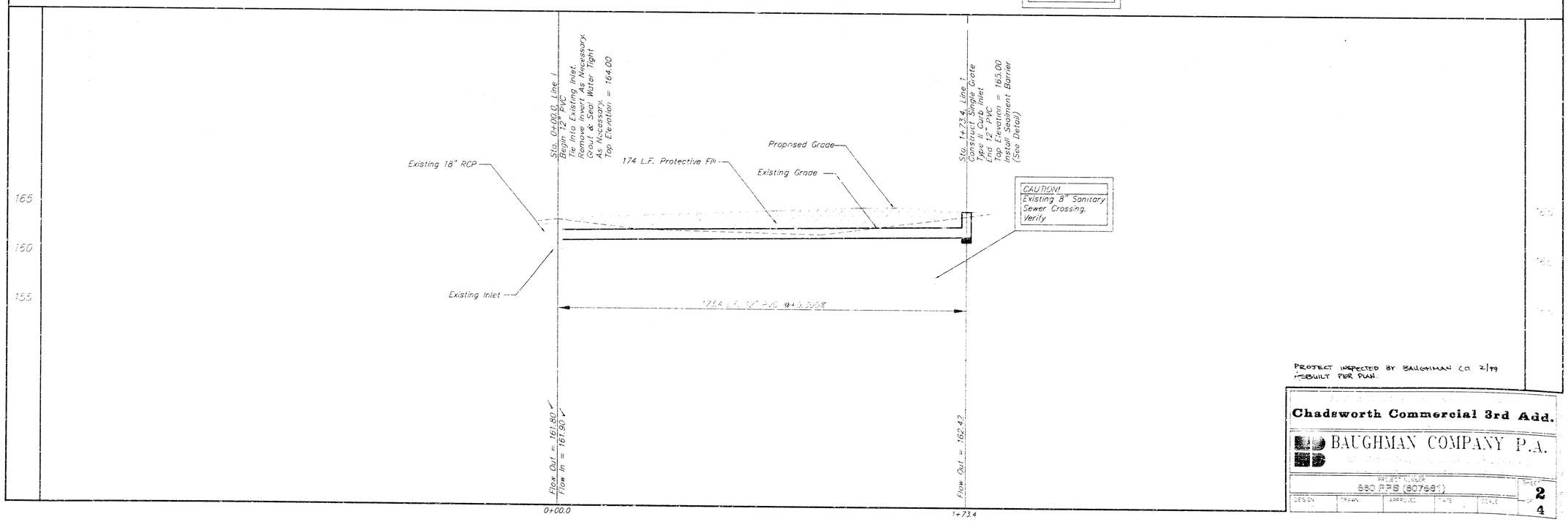

PROJECT INSPECTED BY BAUGHMAN CO. 2/99
AS-BUILT PER PLAN.

Chadsworth Commercial 3rd Add.

BAUGHMAN COMPANY P.A.

PROJECT NUMBER	SHEET
880 PPS (807691)	2
DESIGN / DRAWN / APPROVED / DATE / SCALE	OF 4

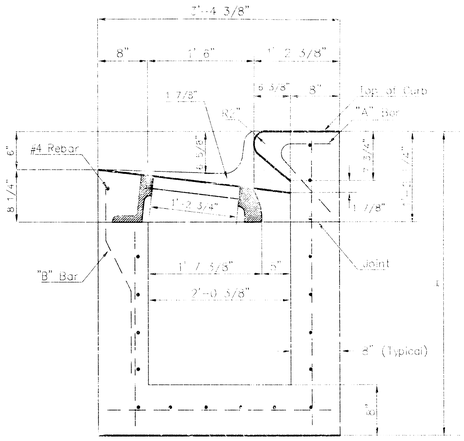

SECTION A-A

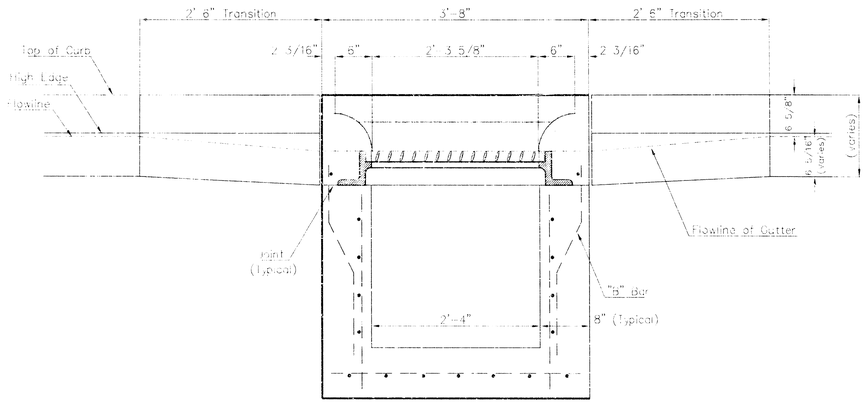

SECTION C-C

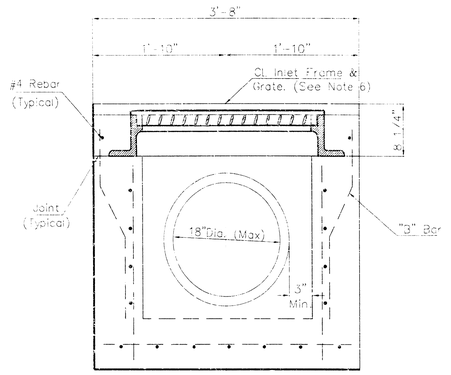

SECTION D-D

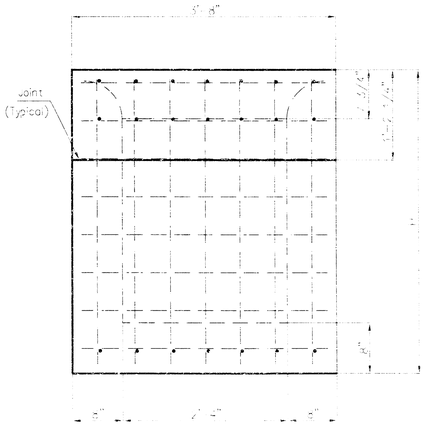

REAR WALL

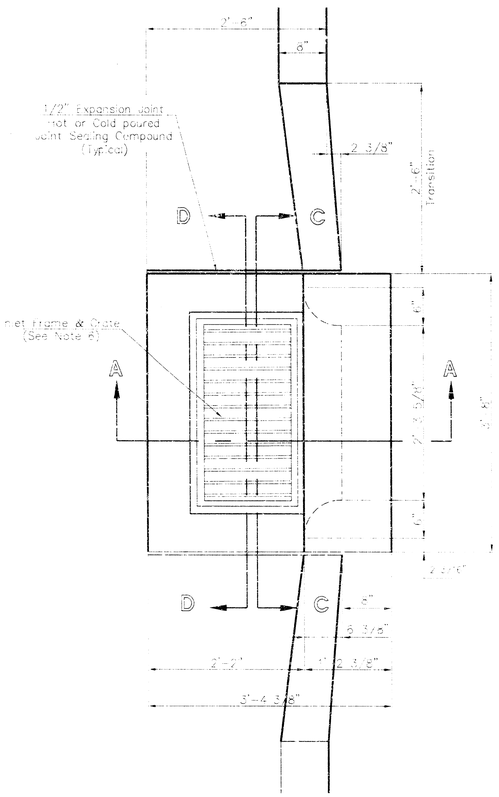

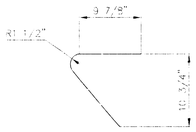

"A" Bar

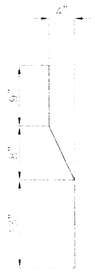

"B" Bar

General Notes

1. Use the concrete mix specified for the City of Wichita concrete pavement throughout. All exposed edges shall be finished with an edging tool. Reinforcing bars shall be bent around pipe.
2. Inlet invert shall be shaped with 8 sack mix concrete to create flow channels and to increase hydraulic efficiency such that the inlet will be self cleaning between all inlet and/or outlet pipes.
3. All bars are #4 with 6" spacing and shall have a minimum clearance of 1 1/2" inches unless otherwise noted on the plans.
4. When directed by the Engineer, a small opening may be required in the back of the inlet in order to drain a low area. Reinforcing bars will extend through the openings. No deductions in concrete quantities will be made for these openings.
5. No deductions will be made in pay length of curb, gutter, or curb and gutter through the inlet area.
6. Use Neenah R-3289 HV Single Inlet Frame and Grate or approved equal. Inlet frame to be proof load tested to 40,000 lbs. on unsupported side.
7. Reinforcing bars shall be cut or bent around pipes. No deduction in concrete quantities shall be made for pipe openings.
8. The vanes of the grate shall be oriented with respect to the flow arrows shown on the plans.

STD. TYPE II CURB INLET

BAUGHMAN COMPANY P.A.

PROJECT NUMBER					SHEET
580 PPS (807881)					3 OF 4
DESIGN	DRAWN	APPROVED	DATE	SCALE	

PC 86-7

CI-180

CHADSWORTH COMMERCIAL 3RD ADDITION

WICHITA, SEDGWICK COUNTY, KANSAS

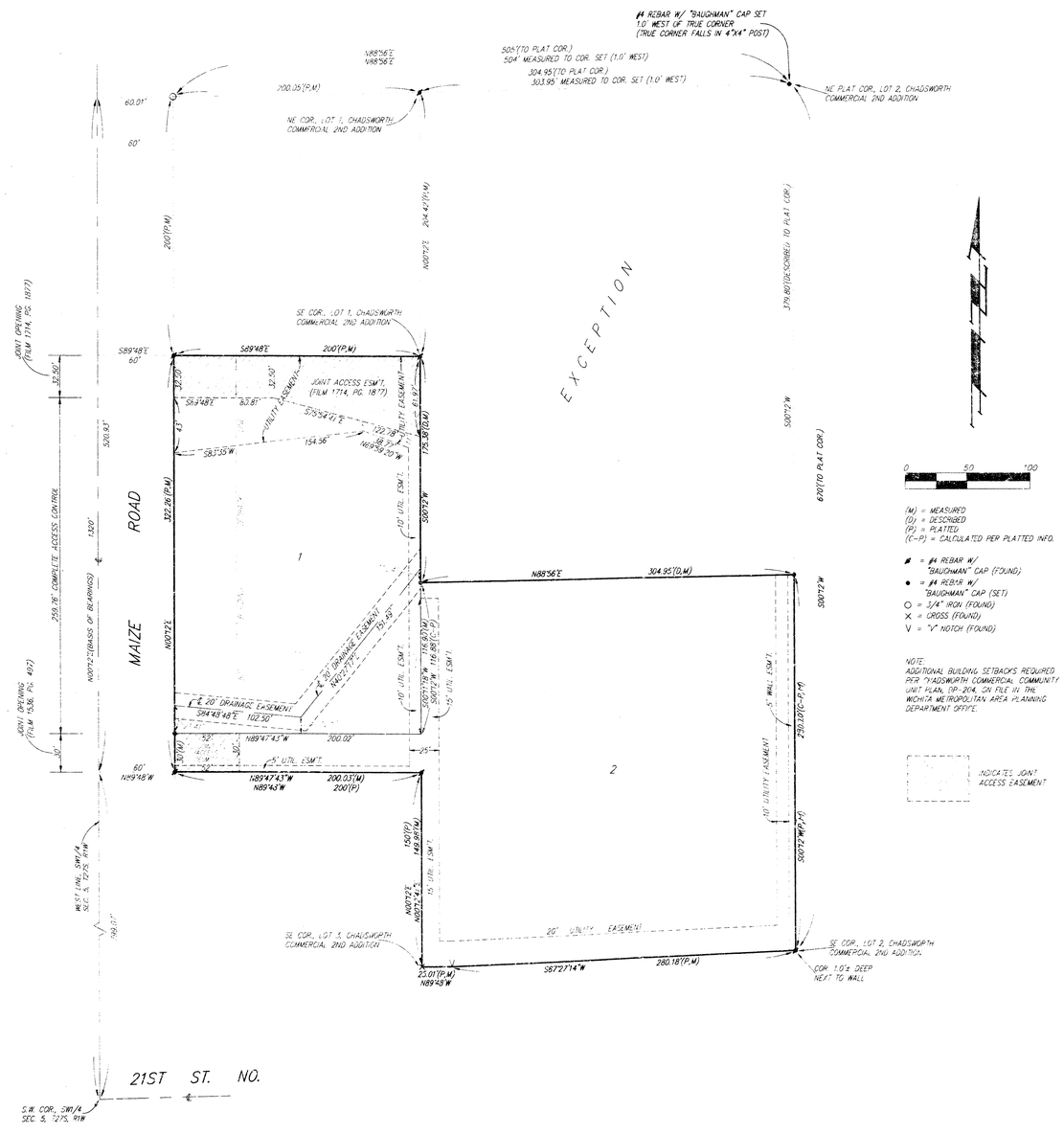

State of Kansas)
Sedgwick County) SS We, Baughman Company, P.A., Surveyors in aforesaid county and state do hereby certify that we have surveyed and platted "CHADSWORTH COMMERCIAL 3RD ADDITION", Wichita, Sedgwick County, Kansas, and that the accompanying plat is a true and correct exhibit of the property surveyed, described as and being a replat of Lot 2, Chadsworth Commercial 2nd Addition, Wichita, Sedgwick County, Kansas, EXCEPT that part of said Lot 2 described as follows: Beginning at the SE Corner of Lot 1 in said Chadsworth Commercial 2nd Addition; thence N00°12'E along the east line of said Lot 1, 204.42 feet to the NE Corner of said Lot 1; thence N88°56'E along the north line of said Lot 2, 304.95 feet to the NE Corner of said Lot 2; thence S00°12'W along the east line of said Lot 2, 379.80 feet; thence S88°56'W parallel with the north line of said Lot 2, 304.95 feet to an intersection with the east line of said Lot 1 as extended south; thence N00°12'E along said extended east line, 175.38 feet to the point of beginning.

All being situated in the SW1/4 of Sec. 5, Twp. 27-S, R-1-W of the 6th P.M., Sedgwick County, Kansas.

Existing public easements and dedications being vacated by virtue of K.S.A. 12-512(b).

Baughman Company, P.A.

Michael G. Conrey 12-16-98 Surveyor
Michael G. Conrey

Know all men by these presents that we, the undersigned, have caused the land described in the surveyors certificate to be platted into Lots to be known as "CHADSWORTH COMMERCIAL 3RD ADDITION", Wichita, Sedgwick County, Kansas. The utility easements are hereby granted as indicated for the construction and maintenance of all public utilities. The wall easement is hereby granted as indicated for the construction and maintenance of a private screening wall and utility main lines and service lines are allowed to cross this easement. The drainage easements are hereby granted as indicated for drainage purposes. Access controls as depicted on the face of the plat are hereby granted to the City of Wichita, Kansas. The permitted entrance locations shall be as determined by the City Engineer of the City of Wichita, Kansas.

Mesa Homes, Inc.

_____, Vice-President
Larry E. Bottenberg

State of Kansas)
Sedgwick County) SS The foregoing instrument acknowledged before me, this 26th day of FEBRUARY, 1998, by Larry E. Bottenberg, Vice-President of Mesa Homes, Inc., on behalf of the corporation.

Judith M. Terhune Notary Public
JUDITH M TERHUNE

My App't. Exp. 11-7-2001

JUDITH M TERHUNE
Notary Public - State of Kansas
My Appt. Expires 11-7-2001

We the undersigned, holders of a mortgage on the above described property, do hereby consent to this plat of "CHADSWORTH COMMERCIAL 3RD ADDITION", Wichita, Sedgwick County, Kansas.

Garden Plain State Bank

_____, Senior Vice-President
Kyle B. Estep

State of Kansas)
Sedgwick County) SS The foregoing instrument acknowledged before me, this 26 day of FEB, 1998, by Kyle B. Estep, Senior Vice-President of Garden Plain State Bank, on behalf of the bank.

Marlene Conrady Notary Public
MARLENE CONRADY

My App't. Exp. 7-6-2000

MARLENE CONRADY
Notary Public - State of Kansas
My Appt. Expires 7-6-2000

This plat of "CHADSWORTH COMMERCIAL 3RD ADDITION", Wichita, Sedgwick County, Kansas has been submitted to and approved by the Wichita-Sedgwick County Metropolitan Area Planning Commission, Wichita, Kansas.
Dated this 25 day of September, 1997

Wichita-Sedgwick County Metropolitan Area Planning Commission.

John C. Frye Chairman
John C. Frye

SEAL

Marvin S. Krout Secretary
Marvin S. Krout

This plat approved and all dedications shown hereon accepted by the City Council of the City of Wichita, Kansas, this 14 day of April, 1998.

THE CITY OF WICHITA SEDGWICK COUNTY, KANSAS

Bob Knight Mayor
Bob Knight

Pat Burnett City Clerk
Pat Burnett

Entered on transfer record this 7th day of MAY, 1998.

James Alford County Clerk
James Alford

State of Kansas)
Sedgwick County) SS This is to certify that this plat has been filed for record in the office of the Register of Deeds, this 8th day of May, 1998, at 9:15 o'clock M; and is duly recorded.

BILL MERK Register of Deeds

REGISTER OF DEEDS SEDGWICK COUNTY, KANSAS

LINDA KIZZIAR Deputy

16885941

BAUGHMAN COMPANY P.A.
ENGINEERING, SURVEYING, & PLANNING
316-262-7271 • 315 ELLIS • WICHITA, KANSAS 67211

20.00 CK CI-180