PRIVATE STORM WATER PLANS

LEE AEROSPACE

LOTS 20 & 21, BLOCK 1
COMOTARA INDUSTRIAL PARK FIFTH ADDITION
PRIVATE PROJECT NO. 862PPS

CITY OF WICHITA, KANSAS

MICHAEL E. LINDEBAK, CITY ENGINEER

INDEX CODE 607861

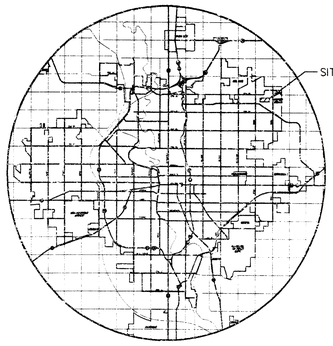

LOCATION MAP

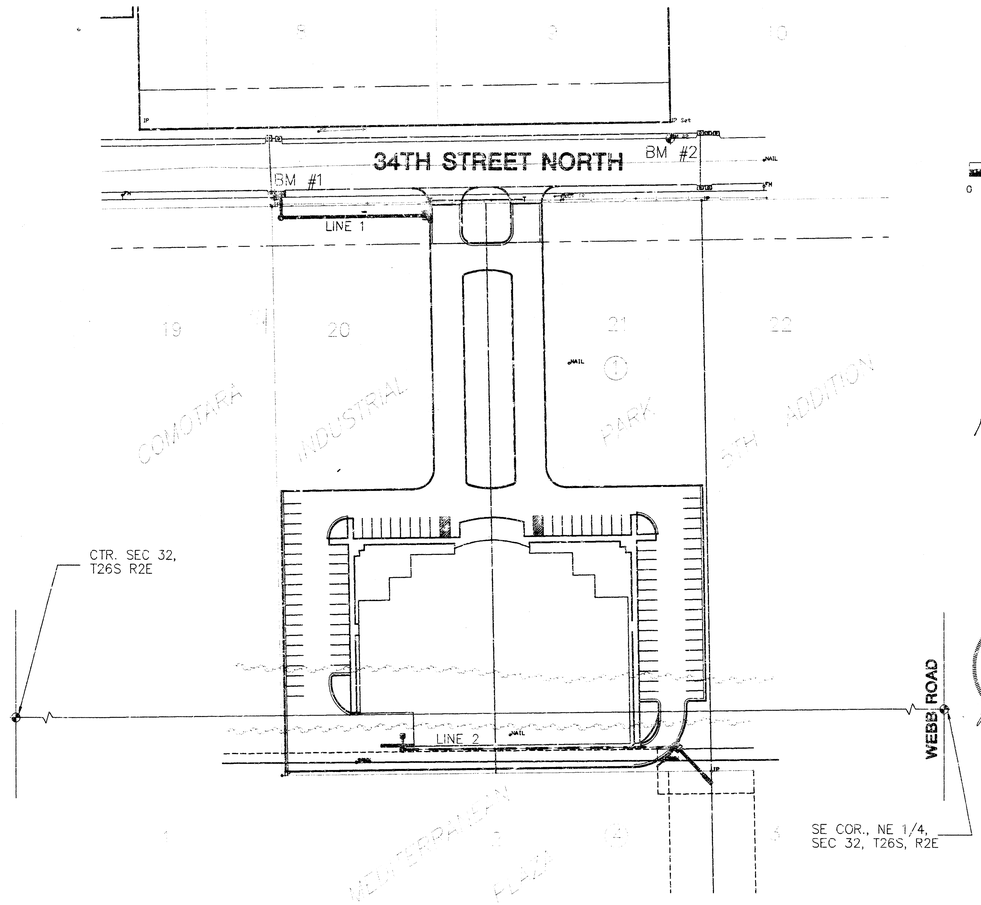

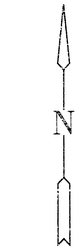

SCALE: 1"=60'

0 60 120

APPROVED AS NOTED

BY CITY ENGINEER OF WICHITA

SANITARY SEWERS_____

STORM SEWERS VRH 11/9/98

DRIVEWAY APPROACHED_____

WATER MAINS_____

PAVING_____

NOTE TO CONTRACTOR

INSPECTION AND TESTING FOR THIS PROJECT IS TO BE PROVIDED BY A LICENSED CONSULTING ENGINEERING FIRM UNDER CONTRACT WITH THE OWNER/DEVELOPER. SAID INSPECTION TO BE IN ACCORDANCE WITH THE CITY OF WICHITA STANDARD CONSTRUCTION ENGINEERING PRACTICES AND CERTIFIED BY A LICENSED PROFESSIONAL ENGINEER. NO WORK SHALL BE PERFORMED IN DEDICATED EASEMENTS OR THE PUBLIC RIGHT-OF-WAY BY THE CONTRACTOR WITHOUT SUCH INSPECTION, NOR SHALL ANY WORK BE COMMENCED IN DEDICATED EASEMENTS OR PUBLIC RIGHT-OF-WAY WITHOUT WRITTEN AUTHORIZATION BY THE CITY ENGINEER.

GENERAL NOTES

1. THE TOPS OF INLETS AND MANHOLES AS NOTED ON THE PLANS MAY VARY SO AS TO MEET PROPOSED TOP OF CURB ELEVATIONS OR PAVEMENT ELEVATIONS. THE FIELD ENGINEER SHALL LOCATE INLETS AND MANHOLES WITH REFERENCE TO PROPOSED PAVING PLANS OF THE PERTINENT PROJECTS.

2. ALL CONCRETE SHALL BE STANDARD PAVING MIX UNLESS OTHERWISE NOTED.

3. THE CONTRACTOR SHALL BE RESPONSIBLE FOR PRESERVING PROPERTY IRONS. THE CONTRACTOR SHALL BE REQUIRED TO RE-ESTABLISH ANY PROPERTY IRONS WHICH ARE DAMAGED OR DESTROYED BY HIS CONSTRUCTION OPERATIONS. SUCH IRONS SHALL BE RE-ESTABLISHED BY A LICENSED LAND SURVEYOR IN ACCORDANCE WITH STATE LAWS.

4. TREES TO BE REMOVED ARE MARKED ⊗. ALL TREES WHICH IN THE OPINION OF THE FIELD ENGINEER CAN BE SAVED, SHALL BE SAVED.

5. CONTRACTOR SHALL NOTIFY UTILITY COMPANIES OF CONSTRUCTION SCHEDULING.

6. EXISTING UTILITIES AND THEIR LOCATIONS, AS SHOWN ON THE PLANS REPRESENT THE BEST INFORMATION OBTAINABLE FOR DESIGN. LOCATION INFORMATION HAS BEEN OBTAINED FROM THE VARIOUS COMPANIES AND IS EITHER FROM COMPANY UTILITY DRAWINGS OR COMPANY PROVIDED FIELD LOCATIONS. THE PLAN LOCATIONS SHOWN ARE NOT GUARANTEED. ADDITIONAL EXISTING UTILITIES MAY ALSO BE ENCOUNTERED.

7. CONTRACTOR WILL BE REQUIRED TO PROVIDE A MINIMUM ADVANCE NOTICE OF FORTY-EIGHT (48) HOURS TO UTILITY COMPANIES TO STARTING ANY EXCAVATION AS FOLLOWS:

   KANSAS ONE-CALL 687-2470
   OR 687-2470 (LOCAL WICHITA)

   THE CONTRACTOR MUST NOTIFY THE FOLLOWING IN CASE OF EMERGENCY:

CABLEVISION	263-2061
KG&E (GAS & ELECTRIC)	383-8600
SOUTHWESTERN BELL TELEPHONE COMPANY	1-800-734-7590
CITY OF WICHITA WATER & SEWER MAINT.	268-4908
ARKLA GAS COMPANY	946-0096

8. RUBBLE FROM THE REMOVAL OF MISCELLANEOUS STRUCTURES AND EXCESS EXCAVATION WHICH IS TO BE WASTED SHALL BE DISPOSED OF ON SITES TO BE PROVIDED BY THE CONTRACTOR. THESE SITES SHALL BE APPROVED BY THE ENGINEER AS TO SUITABILITY, APPEARANCE AND SITE LOCATION. LOCATIONS THAT, IN THE OPINION OF THE ENGINEER, WILL LEAVE AN UNSIGHTLY APPEARANCE WILL NOT BE APPROVED. ALL DISPOSAL SITES MUST BE APPROVED BY THE KANSAS DEPARTMENT OF HEALTH AND ENVIRONMENT. MATERIAL EITHER STOCKPILED OR DISPOSED OF IN A FLOOD PLAIN WOULD REQUIRE A KANSAS STATE BOARD OF AGRICULTURE PERMIT. ANY MATERIAL DUMPED IN WATERS OF THE UNITED STATES OR WETLANDS IS SUBJECT TO U.S. CORPS OF ENGINEERS PERMITTING REGULATIONS. ANY MATERIAL BURIED OR STOCKPILED BEYOND APPROVED CONSTRUCTION LIMITS WOULD REQUIRE ADDITIONAL ARCHAEOLOGICAL INVESTIGATIONS UNLESS BURIED IN A PREVIOUSLY APPROVED BORROW LOCATION.

9. CONTRACTOR SHALL RESEED AND MULCH ALL DISTURBED AREAS. COST SHALL BE CONSIDERED SUBSIDIARY TO SITE RESTORATION.

INDEX TO DRAWINGS

1	TITLE SHEET
2	LINES 1 & 2
3-5	INLET & MANHOLE DETAILS
6-7	FINAL PLATS

Booked
E-3
8/18/03
RDL

BENCHMARKS

BM #1 "□" CUT ON SE COR. W CURB INLET S. SIDE OF 34TH ST. NORTH, 10' N OF NW COR., LOT 20 BLK. 1, COMOTARA INDUSTRIAL PARK 5TH ADD. ELEV. = 232.80

BM #2 "□" CUT ON TC @ SE CORNER LOT 9, BLK. 1, @ 34TH ST. NORTH, WEST OF WEBB ROAD. COMOTARA INDUSTRIAL PARK 5TH ADD. ELEV. = 237.625

JEFFREY T. CARTWRIGHT LICENSED PROFESSIONAL ENGINEER 14371 11-7-98

MID-KANSAS ENGINEERING CONSULTANTS, INC.
411 N. WEBB ROAD
WICHITA, KS. 67206
316-684-9600

LEE AEROSPACE
PROJECT NAME

STORM WATER PLANS
SHEET TITLE

DESIGN BY:	DRAWN BY:	CHECKED BY:
JTC	DAC	JTC

DATE	JOB NO.	SHEET/OF
NOVEMBER 1998	98113_DT	1 /

G:\DWG\WEBB\98113\DWGS\98113_DT

Mon Nov 09 12:34:10 1998

LEE AEROSPACE
STORM WATER SEWER PLA
LINES 1 & 2

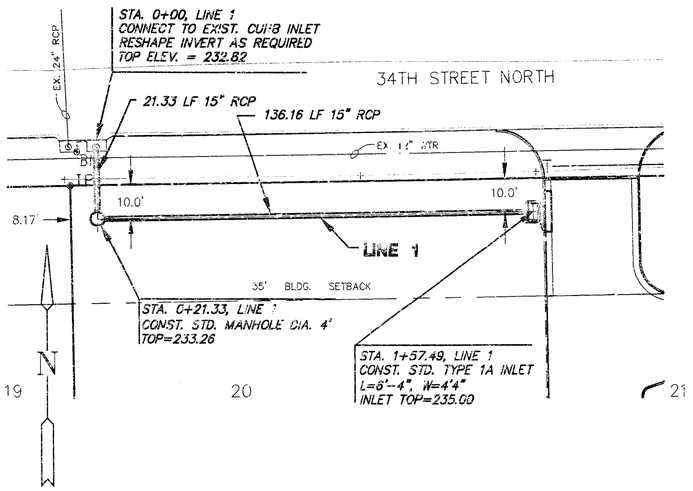

PLAN LINE 1

SCALE: 1"=20'

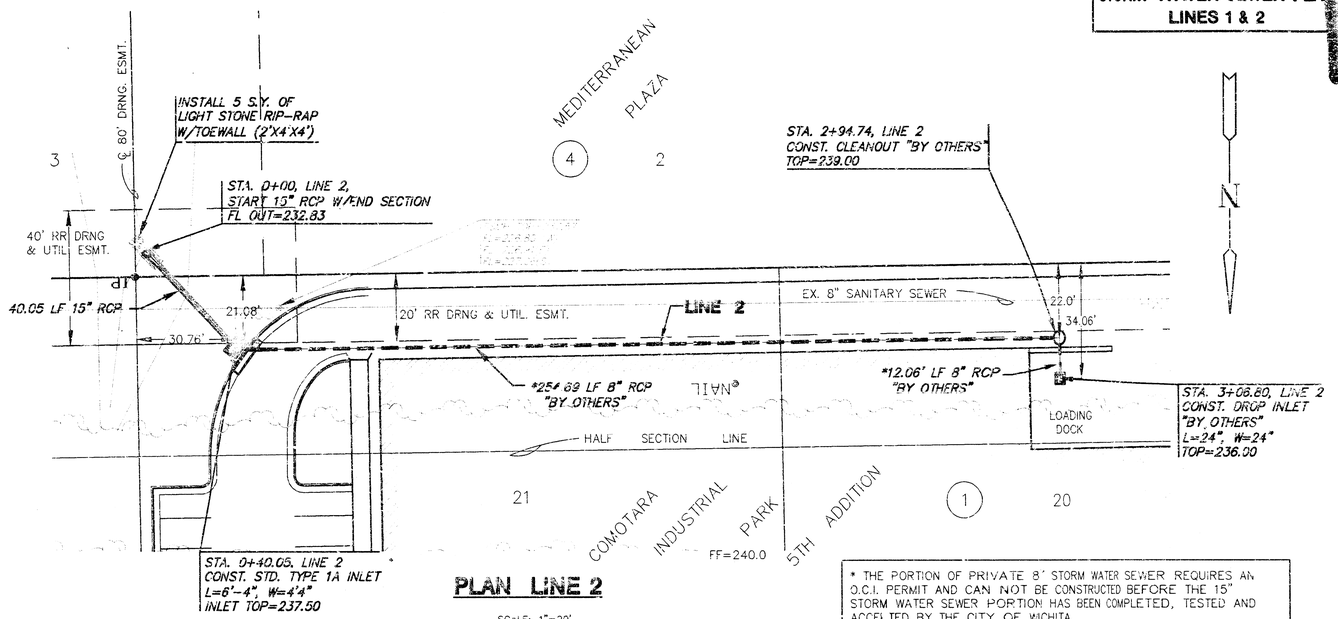

PLAN LINE 2

SCALE: 1"=20'

* THE PORTION OF PRIVATE 8" STORM WATER SEWER REQUIRES AN O.C.I. PERMIT AND CAN NOT BE CONSTRUCTED BEFORE THE 15" STORM WATER SEWER PORTION HAS BEEN COMPLETED, TESTED AND ACCEPTED BY THE CITY OF WICHITA.

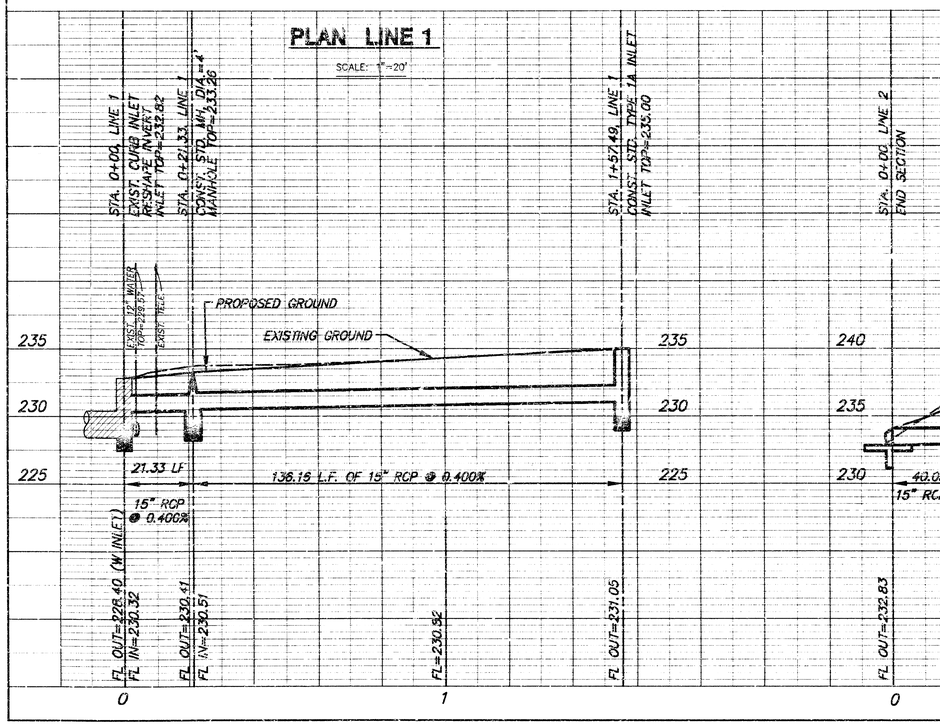

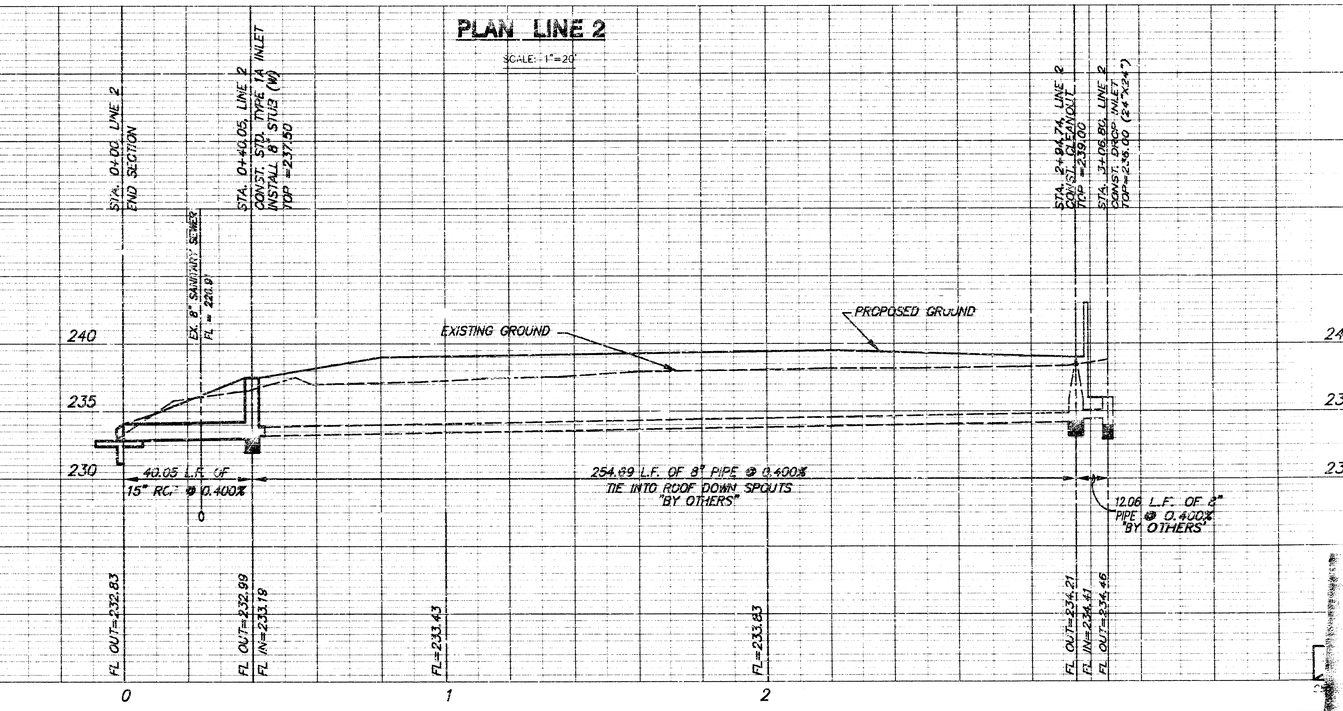

G:\CIVIL\...11.DWG Mon Nov 09 13:32:29 1998

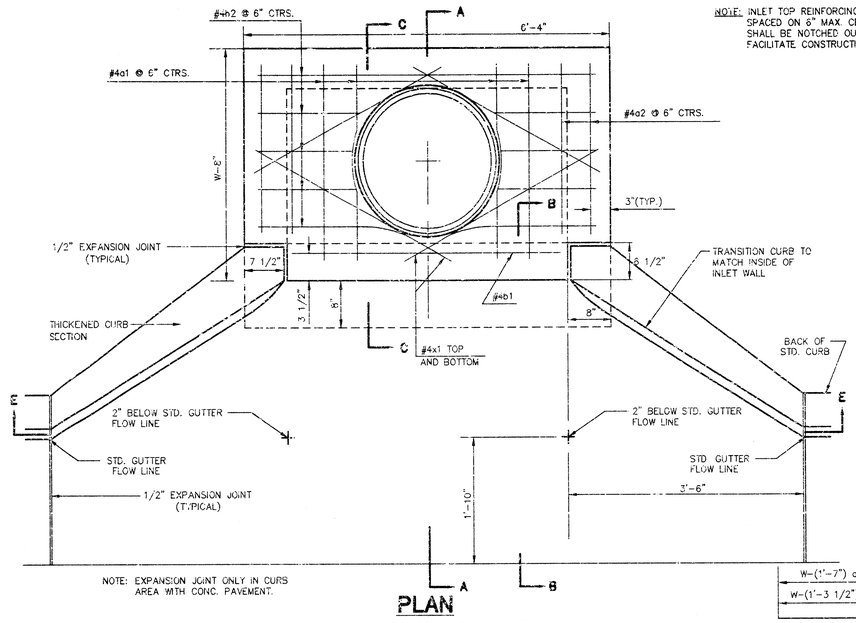

PLAN

NOTE: INLET TOP REINFORCING SHALL BE SPACED ON 6" MAX. CENTERS. INLET LIDS SHALL BE NOTCHED OUT AS INDICATED TO FACILITATE CONSTRUCTION OF CURB.

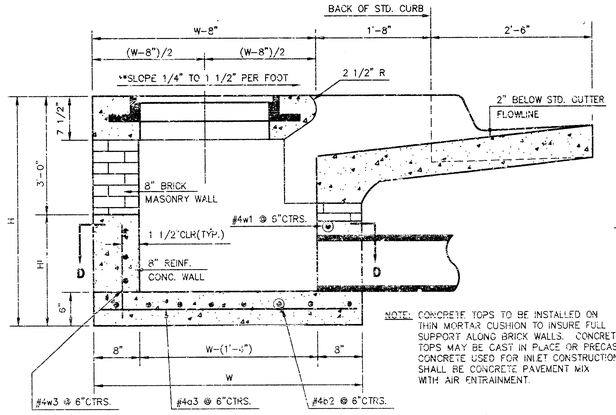

NOTE: CONCRETE TOPS TO BE INSTALLED ON THIN MORTAR CUSHION TO INSURE FULL SUPPORT ALONG BRICK WALLS. CONCRETE TOPS MAY BE CAST IN PLACE OR PRECAST. CONCRETE USED FOR INLET CONSTRUCTION SHALL BE CONCRETE PAVEMENT MIX WITH AIR ENTRAINMENT.

SECTION A-A

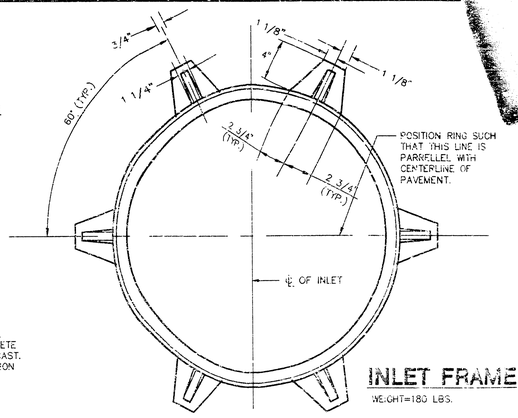

INLET FRAME

WEIGHT=180 LBS.

NOTE: CONTRACTOR SHALL HAVE THE OPTION OF CONSTRUCTING 8" BRICK MASONRY WALLS BETWEEN THE CONCRETE INLET BASE AND TOP ON THIS INLET WHEN W=6'-4" AND H=7'-0" OR LESS.

ADDITIONAL CURB AND GUTTER CONSTRUCTION NECESSARY TO CONNECT SET-BACK INLET TO PAVEMENT WILL BE PAID FOR AT THE UNIT PRICE BID FOR EACH INLET HOOKUP.

INLET INVERT SHALL BE SHAPED WITH 8 SACK SAND MIX CONCRETE TO CREATE FLOW CHANNELS AND TO INCREASE HYDRAULIC EFFICIENCY SUCH THAT THE INLET WILL BE SELF CLEANING BETWEEN ALL INLET AND/OR OUTLET PIPES.

THE ENDS OF ALL PIPES INSTALLED IN INLETS SHALL BE CUT OFF FLUSH WITH THE INSIDE FACE OF THE INLET WALL.

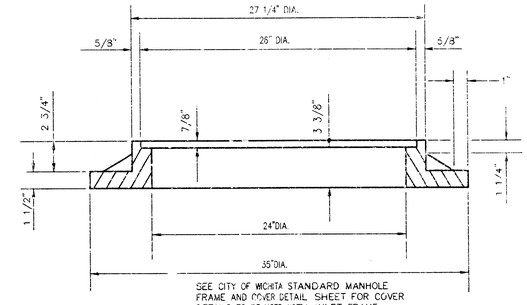

SEE CITY OF WICHITA STANDARD MANHOLE FRAME AND COVER DETAIL SHEET FOR COVER DETAILS TO BE USED WITH INLET FRAME.

PRECAST SLAB AND FLOOR REINFORCING

		W=4'-4"		W=5'-4"		W=6'-4"		W=7'-4"		W=8'-4"	
MARK	SIZE	NO.	LENGTH	NO.	LENGTH	NO.	LENGTH	NO.	LENGTH	NO.	LENGTH
*a1	#4	6	6'-7"	6	8'-7"	6	10'-7"	6	12'-7"	6	14'-7"
a2	#4	4	6'-0"	4	8'-0"	4	10'-0"	4	12'-0"	4	14'-0"
a3	#4	13	4'-1"	13	5'-1"	13	6'-1"	13	7'-1"	13	8'-1"
b1	#4	1	4'-9"	1	4'-9"	1	4'-9"	1	4'-9"	1	4'-9"
*b2	#4	23	6'-1"	29	6'-1"	35	6'-1"	41	6'-1"	47	6'-1"
x1	#4	8	3'-10"	8	4'-2"	8	4'-6"	8	4'-10"	8	5'-2"

WALL REINFORCING

		W=4'-4"		W=5'-4"		W=6'-4"		W=7'-4"		W=8'-4"	
MARK	SIZE	NO.	LENGTH	NO.	LENGTH	NO.	LENGTH	NO.	LENGTH	NO.	LENGTH
w1	#4	①	6'-1"	①	6'-1"	①	6'-1"	①	6'-1"	①	6'-1"
w2	#4	①	4'-1"	①	5'-1"	①	6'-1"	①	7'-1"	①	8'-1"
w3	#4	32	②	36	②	40	②	44	②	48	②

* FIELD BEND OR CUT REINFORCING AS REQUIRED FOR CLEARANCE
① 4(HI-12"); (HI-12") ROUND DOWN TO NEAREST 0.5'
② HI-3"

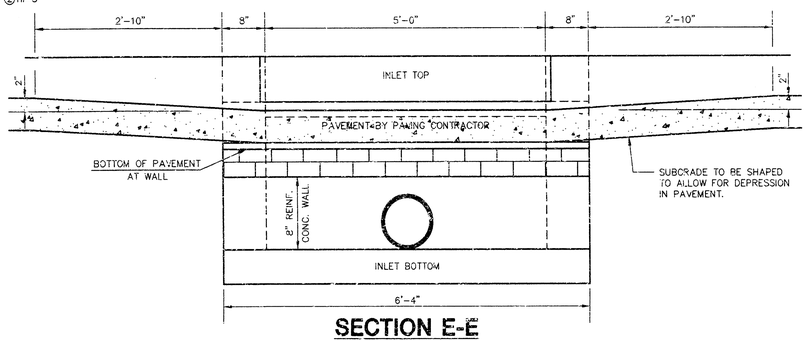

SECTION E-E

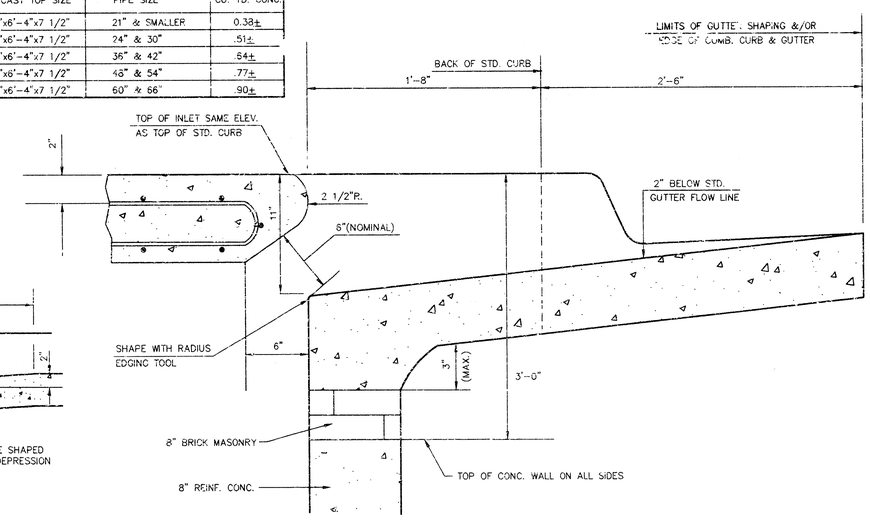

BENDING DIAGRAM

STANDARD CURB INLET PRECAST TOPS			
W	PRE-CAST TOP SIZE	PIPE SIZE	CU. YD. CONC.
4'-4"	3'-8"x6'-4"x7 1/2"	21" & SMALLER	0.38±
5'-4"	4'-8"x6'-4"x7 1/2"	24" & 30"	.51±
6'-4"	5'-8"x6'-4"x7 1/2"	36" & 42"	.64±
7'-4"	5'-8"x6'-4"x7 1/2"	48" & 54"	.77±
8'-4"	7'-8"x6'-4"x7 1/2"	60" & 66"	.90±

**NOTE: SLOPE OF INLET TOPS TO MATCH SIDEWALK OR PARKING SLOPES WITHIN LIMITS INDICATED.

SECTION B-B

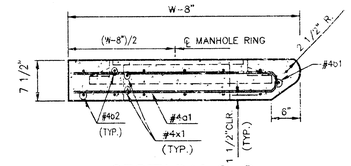

SECTION C-C

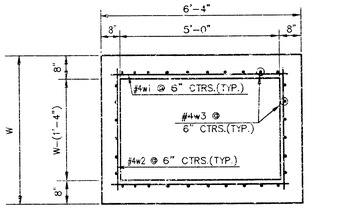

SECTION D-D

REVISED: 2-16-89 C.O.W.

STANDARD TYPE 1A CURB INLET

INLET OPENING=6"x5'-0"

JUNE 1984

CITY OF WICHITA, KANSAS

Design C.O.W.	Checked by	Checked by	
Drawn by	Date	Date 11/1998	Job No.

G:\CITY\LMISC\98113_001.DWG Mon Nov 09 13:24:06 1998

G:\CITY\LMISC\98113\SHTS\98113_001

NOTE: GRATES SHALL BE IMPRINTED ON THE TOP SURFACE WITH "CITY OF WICHITA" USING LETTERS AT LEAST 1" IN HEIGHT. OTHER MARKING METHODS MAY BE USED ONLY IF APPROVED BY THE ENGINEER.

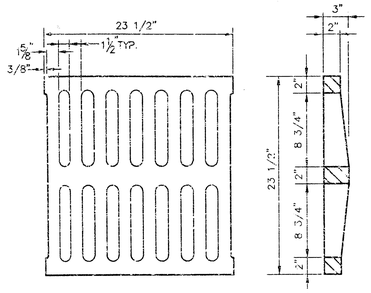

24"x24" GRATE DETAIL

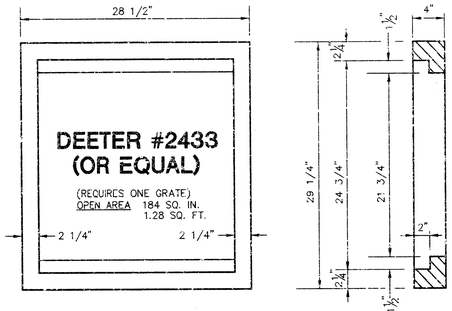

SINGLE 24"x24" FRAME DETAIL

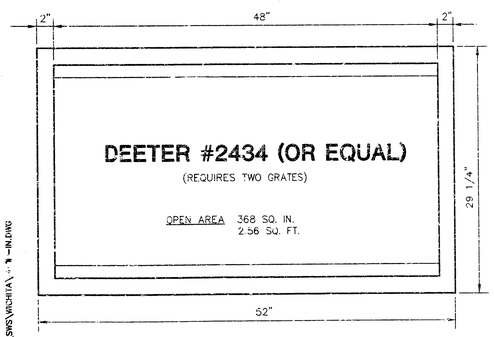

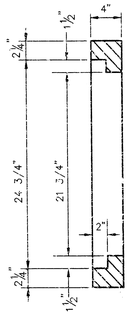

DOUBLE 24"x24" FRAME DETAIL

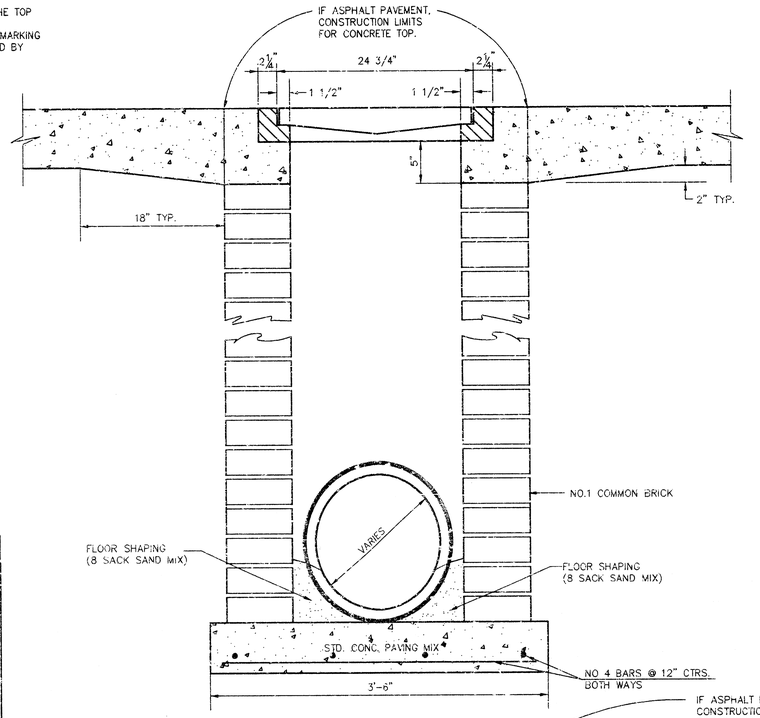

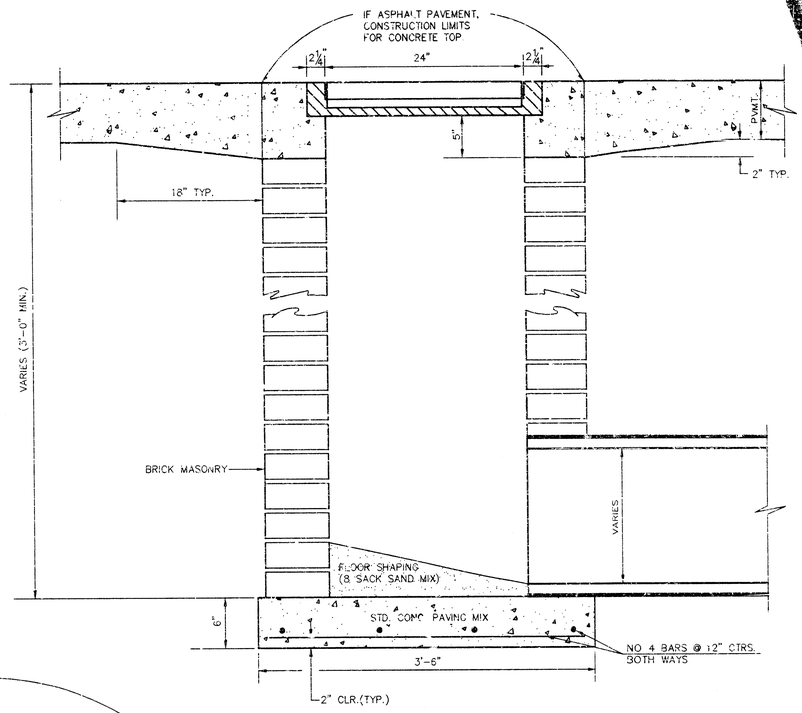

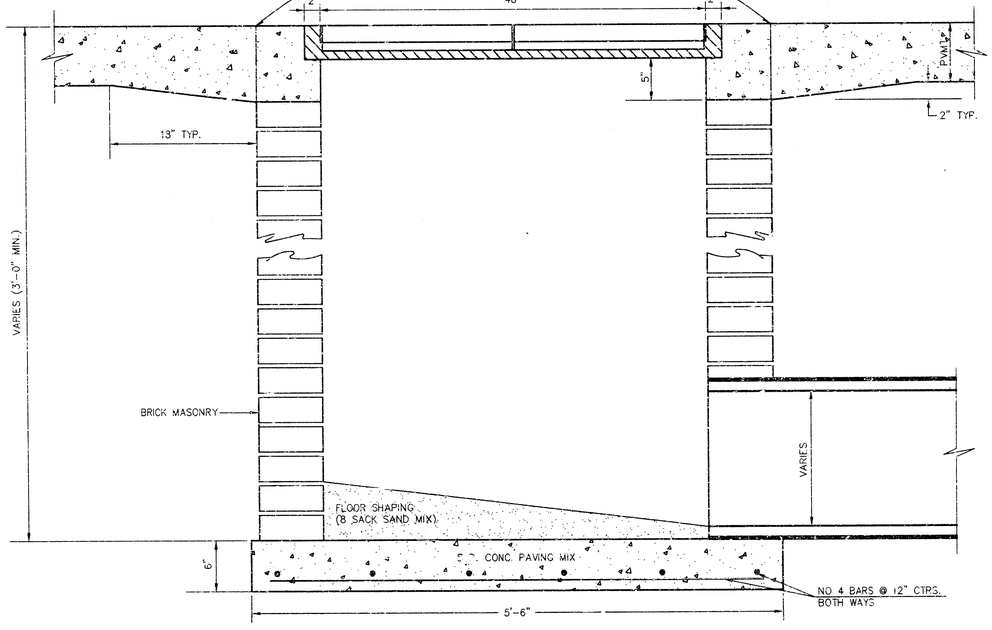

ORIFICE EQUATION		
$Q=C*A*\sqrt{2gh}$		C=0.60
h (DEPTH)	#2433 (SINGLE)	#2434 (DOUBLE)
0.1	1.95 cfs	3.89 cfs
0.2	2.75 cfs	5.50 cfs
0.3	3.37 cfs	6.74 cfs
0.4	3.89 cfs	7.78 cfs
0.5	4.35 cfs	8.70 cfs
0.6	4.77 cfs	9.53 cfs
0.7	5.15 cfs	10.30 cfs
0.8	5.50 cfs	11.01 cfs
0.9	5.84 cfs	11.67 cfs
1.0	6.15 cfs	12.30 cfs

REVISED: 5-8-90 JNJ

DROP INLET DETAILS

CITY OF WICHITA, KANSAS

Design C.O.W.	Checked by	Checked by	
Drawn by	Date	Date	Job No.

F:\LIBRARY\CIVIL\SWS\WICHITA\...\IN.DWG

G:\CIVIL\MISC\... DDC.DWG Mon Nov 09 14:28:23 1998

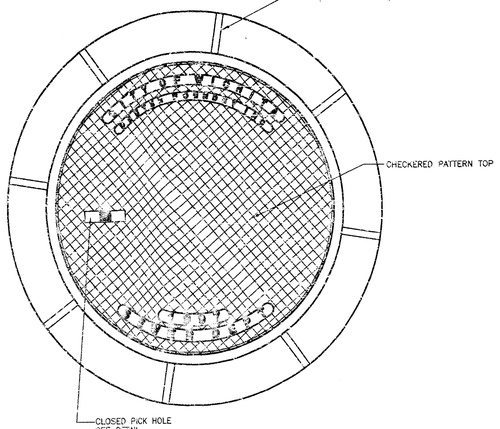

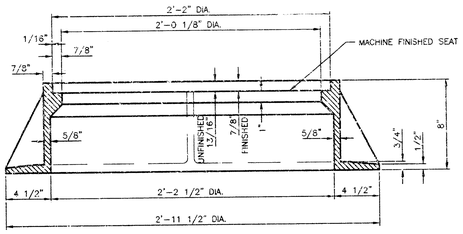

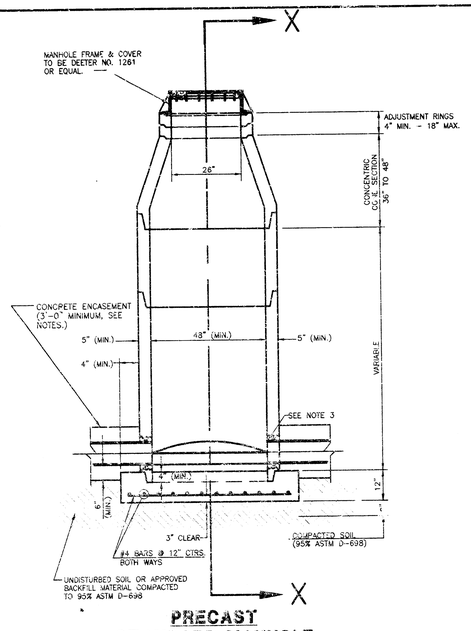

PRECAST
STANDARD MANHOLE
TYPE 'A'

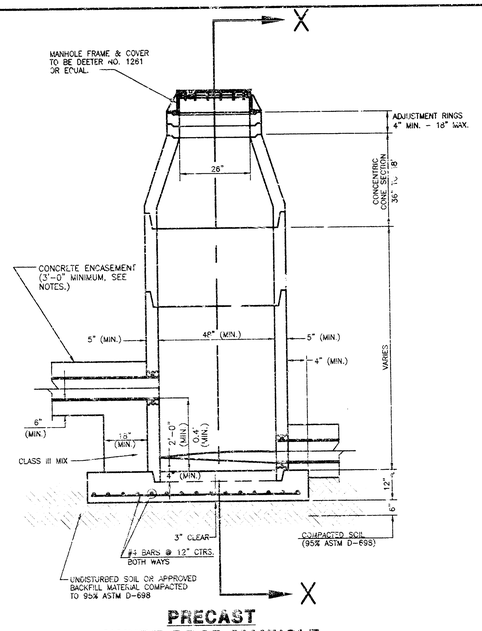

PRECAST
INSIDE DROP MANHOLE
TYPE 'B'

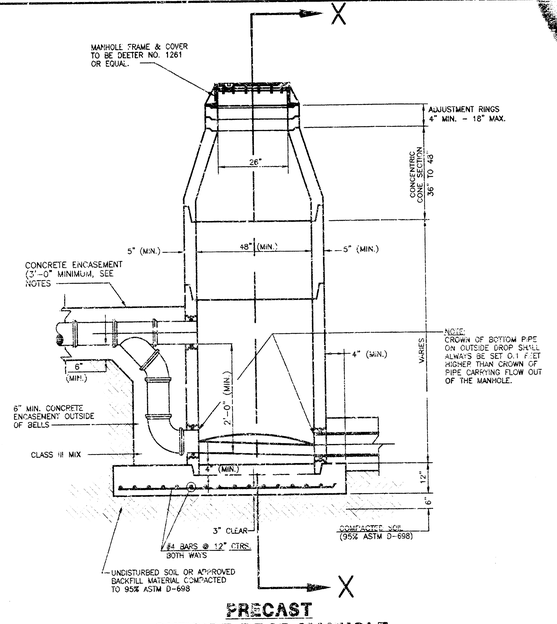

PRECAST
OUTSIDE DROP MANHOLE
TYPE 'C'

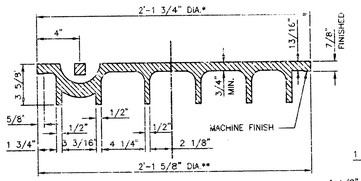

*OUTSIDE DIA. TOP OF COVER
**OUTSIDE DIA. BOTTOM OF COVER

MANHOLE FRAME AND COVER

(TOTAL WEIGHT = 430 LBS.)

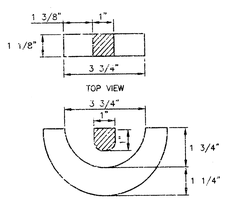

PICK HOLE DETAIL

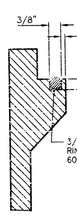

FRAME GROOVING DETAIL
(FOR SELF-SEALING MHS ONLY)

MANHOLE FRAME AND COVER NOTES

1. CAST IRON MANHOLE FRAME AND COVER SHALL CONFORM TO ASTM A-48, CLASS 30, OR BETTER.
2. THE FRAMES AND COVERS SHALL BE OF A NONROCKING TYPE OR WITH MACHINED BEARING SURFACES SO FITTING PARTS WILL NOT RATTLE OR ROCK UNDER TRAFFIC.
3. MANHOLE CASTINGS SHALL BE DEETER FOUNDRY INC. NO. 1261 OR APPROVED EQUAL, UNLESS OTHERWISE SPECIFIED IN THE SPECIAL CONDITIONS. (MINIMUM WT.-430 LBS.) ALL MANHOLE CASTINGS, REGARDLESS OF TYPE, SHALL BE CONSIDERED SUBSIDIARY TO THE UNIT PRICES BID FOR THE VARIOUS MANHOLE TYPES.
4. GRIND ALL BURRS SMOOTH, CLEAN THOROUGHLY, THEN APPLY SHOP COAT OF ASPHALT BASE PAINT.
5. THE MANUFACTURER SHALL SUBMIT SHOP DRAWINGS TO THE ENGINEER FOR APPROVAL PRIOR TO MANUFACTURE. THE ENGINEER SHALL RETAIN THE RIGHT TO REJECT CASTINGS NOT CONFORMING TO THE SPECIFICATIONS OR THE APPROVED SHOP DRAWINGS.
6. WHERE SELF-SEALING MANHOLE FRAMES ARE SPECIFIED ON THE PLANS, THE MANHOLE FRAME SHALL BE FURNISHED WITH AN APPROVED "O" RING GASKET GROOVED INTO THE BEARING SURFACE OF THE MANHOLE FRAME (PER DETAIL). THE "O" RING GASKET SHALL NOT BE INSTALLED IN THE MANHOLE FRAME UNTIL AFTER FINAL INSPECTION AND ACCEPTANCE OF THE PROJECT BY THE ENGINEER. THE CONTRACTOR SHALL SUPPLY TO THE OWNER ONE (1) REPLACEMENT "O" RING GASKET FOR EACH SELF-SEALING MANHOLE SPECIFIED.

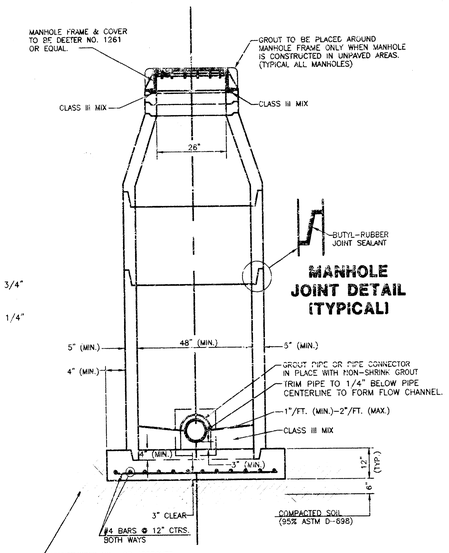

MANHOLE
JOINT DETAIL
(TYPICAL)

SECTION X
(TYPICAL)

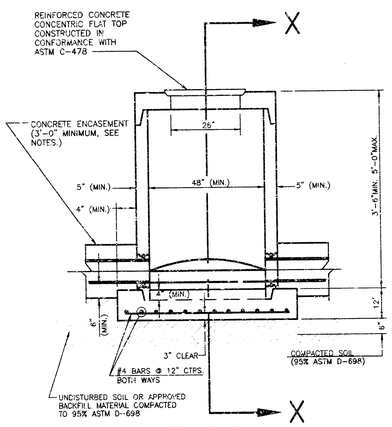

PRECAST
SHALLOW MANHOLE
TYPE 'D'

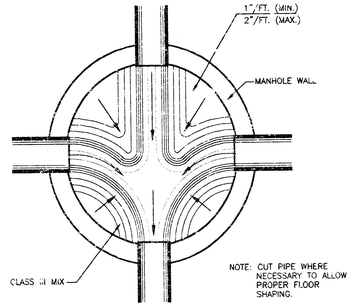

TYPICAL MANHOLE
FLOOR SHAPING

PRECAST MANHOLE NOTES

1. IF, IN THE OPINION OF THE ENGINEER, THE MANHOLE SUBGRADE APPEARS UNSTABLE, THE CONTRACTOR WILL HAVE THE OPTION TO COMPACT SUBGRADE AS SHOWN OR INCREASE THE THICKNESS OF THE MANHOLE BASE AS DIRECTED BY THE ENGINEER.
2. STEEL REINFORCING WILL BE REQUIRED IN ALL MANHOLE BASES.
3. APPROVED FLEXIBLE WATERSTOP GASKETS WHICH MEET OR EXCEED THE TEST REQUIREMENTS OF ASTM C-923 SHALL BE INSTALLED TO JOIN THE SEWER TO THE MANHOLE WALL WHEN PLASTIC PIPE IS USED. SEWER PIPE EXTENDING FROM MAN-HOLES SHALL BE SUPPORTED WITH CONCRETE ENCASEMENT A MINIMUM OF 3 FEET FROM THE MANHOLE WALL.
4. THE MANHOLE FRAME SHALL BE SEATED ON AN APPROVED BUTYL-RUBBER SEALANT TO PROVIDE A WATER-TIGHT SEAL BETWEEN THE MANHOLE ADJUSTMENT RING AND THE MANHOLE FRAME.
5. GASKETED PIPE PLUGS AND CAPS SHALL BE PROVIDED BY THE PIPE SUPPLIER.
6. ALL MANHOLE CONSTRUCTION SHALL BE WATER TIGHT.
7. TOP OF MANHOLE FLAT SLAB SHALL BE AT LEAST 3 INCHES BELOW THE FLOW LINE OF THE OUTLET PIPE TO INSURE SUFFICIENT MINIMUM THICKNESS OF SHAPED INVERT.
8. ALL PRECAST CONCRETE MANHOLE SECTIONS SHALL CONFORM TO THE LATEST REVISION OF ASTM C-478 AS MODIFIED BY THE SPECIFICATIONS.
9. CONCRETE FOR MANHOLE BASES SHALL BE CLASS I AS DESCRIBED IN THE SPECIFICATIONS.
10. PRECAST MANHOLES SHALL BE SET AT LEAST 4 INCHES INTO MANHOLE BASE.
11. MANHOLES WITH PIPE SIZES 24" AND LARGER SHALL HAVE 5' INSIDE DIAMETER (MIN.).
12. INSIDE DIAMETER OF FIVE-FOOT DIAMETER PRECAST MANHOLES SHALL REMAIN CONSTANT TO THE LOCATION OF THE REDUCING FLAT TOP WHICH CONNECTS THE FOUR-FOOT DIAMETER CONE SECTION TO THE FIVE-FOOT DIAMETER MANHOLE BARREL.
13. ALL INTERIOR CONCRETE SURFACES ABOVE THE BENCH OF PRECAST MANHOLES SHALL BE COATED WITH 2 COATS OF TNEMIC SERIES 66 HI-BUILD EPOXOLINE, DRY THICKNESS OF 8 MILS (MIN.).
14. EXTERIOR MANHOLE WALLS SHALL BE COATED WITH 1 COAT VALSPAR HI-BUILD BITUMINUS COATING 35-J-10, OR TNEMIC 46-450 HEAVY TNEMECOL, OR APPROVED EQUAL.

MID-KANSAS ENGINEERING
CONSULTANTS, INC.
411 N. WEBB ROAD
WICHITA, KS. 67206
316-684-9500

LEE AEROSPACE
PROJECT NAME

MANHOLE DETAILS
SHEET TITLE

MKEC	MKEC	MKEC
DESIGN BY:	DRAWN BY:	CHECKED
NOVEMBER 1998	98113	5 /
DATE	JOB NO.	SHEET/OF

G:\CIVIL\MISC\98113\SWS\98113_D03.DWG Mon Nov 09 13:24:41 1998

FINAL PLAT OF

MEDITERRANEAN PLAZA

AN ADDITION TO WICHITA, SEDGWICK COUNTY, KANSAS

Lot No.	Block No.	Minimum Pad (City Datum)	Minimum Pad (U.S.G.S.)
10	1	219.5	1406.9
11	1	219.5	1406.9
12	1	219.5	1406.9
15	1	219.5	1406.9
8	2	219.5	1406.9
9	2	219.5	1406.9
1	3	225.5	1412.9
2	3	225.5	1412.9
3	3	225.5	1412.9
4	3	225.5	1412.9

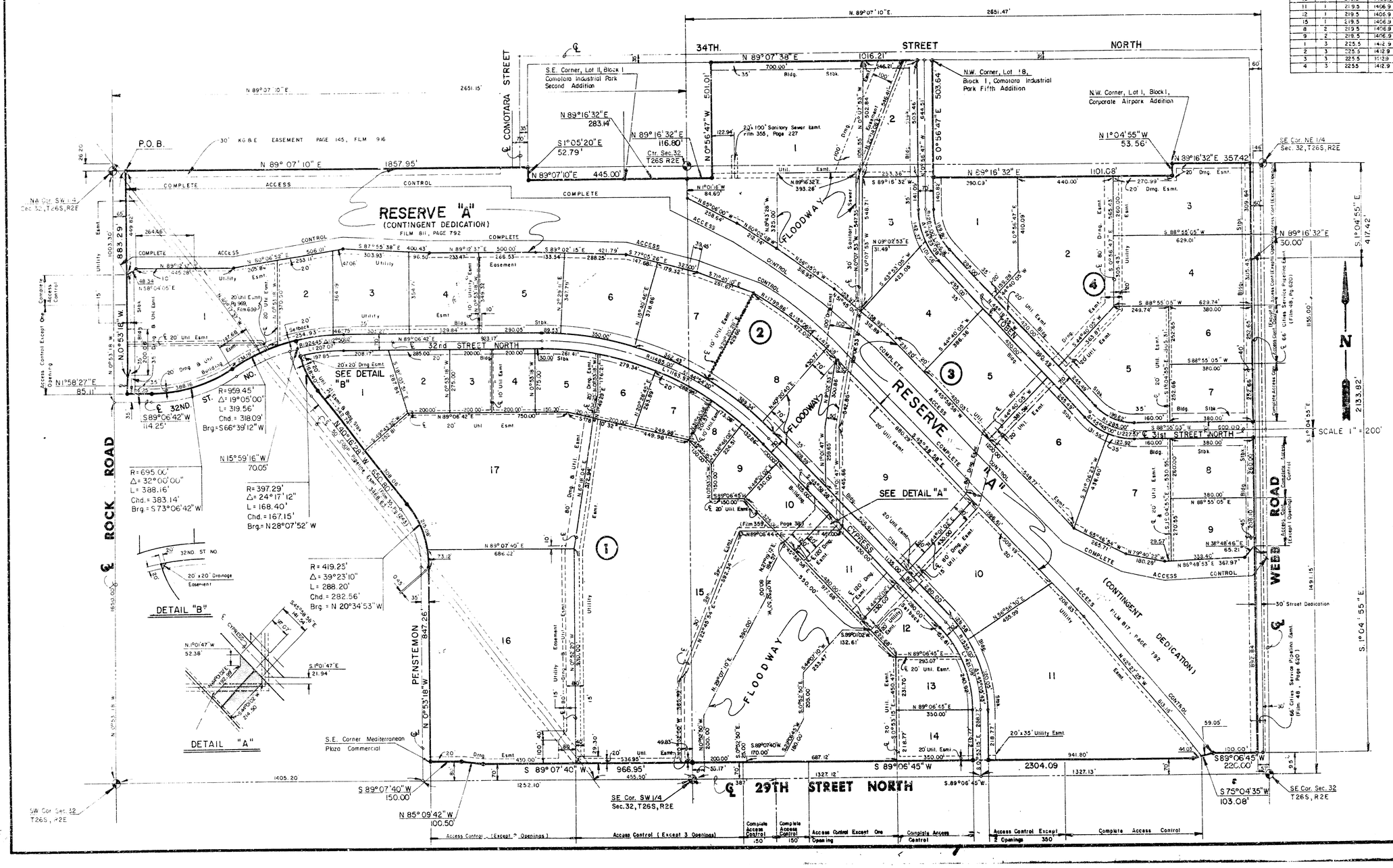

FINAL PLAT OF
COMOTARA INDUSTRIAL PARK FIFTH ADDITION

AN ADDITION TO WICHITA, SEDGWICK COUNTY, KANSAS

SCALE: 1"=200'

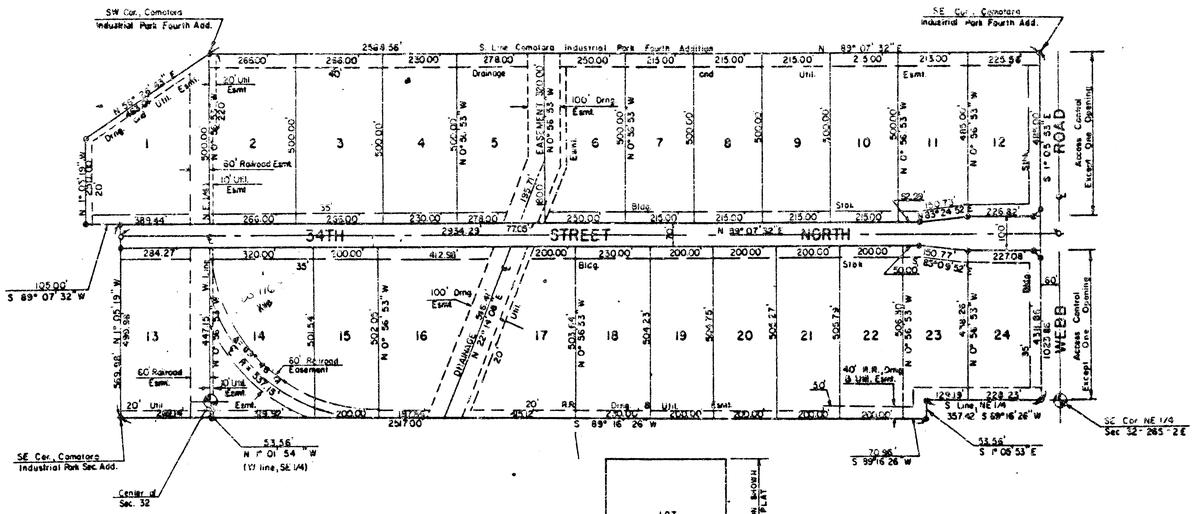

#419009

TYPICAL INTERSECTION
RIGHT OF WAY DETAILS

This plat approved and all dedications shown hereon, if any, accepted by the Board of County Commissioners of Sedgwick County, Kansas this 5th day of December, 1978.

Everett F. Isrich, Chairman
Tom Scott, Commissioner
John Hale, Commissioner
Attest: Dorothy K. White, County Clerk

STATE OF KANSAS, COUNTY OF SEDGWICK, ss:

This is to certify that this instrument was filed for record in the Register of Deeds Office at 10:41 A.M. on the 21st day of December 1978.

Betty L. McCart, Register of Deeds
Pat Koetter, Deputy

This plat of "Comotara Industrial Park Fifth Addition" has been submitted to and approved by the Wichita-Sedgwick County Metropolitan Area Planning Commission, Wichita, Kansas.

Dated this 26th day of October, 1978.

Wichita-Sedgwick County Metropolitan Area Planning Commission
Larry Snider, Chairman
Robert T. Lanik, Secretary

This plat approved and all dedications shown hereon, if any, accepted by the City Commission of the City of Wichita, Kansas this 5th day of December, 1978.

Carole A. Peters, Mayor
Joseph C. Conlee, City Clerk

Entered on transfer record this 21 day of December, 1978.

Dorothy K. White, County Clerk

I, Robert A. Alderson, a Land Surveyor in Kansas, do hereby certify that I am personally cognizant of the facts and circumstances set forth in the Land Surveyor's Certificate, have caused the same to be surveyed and platted into lots and a street, the same to be known as "Comotara Industrial Park Fifth Addition" to Wichita, Sedgwick County, Kansas. The street is hereby dedicated to and for the use of the public. Easements for the location and the construction and maintenance of public utilities and drainage, as indicated on the accompanying plat are hereby granted. All exclusive rights of access over and across the west line of Webb Road are hereby released to the City of Wichita, provided, however, that gate 12 and 24 shall each have access to Webb Road at a location to be determined by the City Engineer of Wichita, Kansas.

I hereby certify that the details of this plat are correct to the best of my knowledge and belief this 22nd day of November 1978.

Robert A. Alderson
Robert A. Alderson
Alderson-Hazard-Billings
150 N. Rock Road Suite 150
Wichita, Kansas 67206

Know all men by these presents that we the undersigned owners of a portion of the land as shown and set forth in the Land Surveyor's Certificate, have caused the same to be surveyed and platted into lots and a street, the same to be known as "Comotara Industrial Park Fifth Addition" to Wichita, Sedgwick County, Kansas. The street is hereby dedicated to and for the use of the public. Easements for the construction and maintenance of public utilities and drainage as indicated on the accompanying plat are hereby granted.

Realco Investment

By: Terrence J. Gleason, Partner

STATE OF KANSAS, COUNTY OF SEDGWICK, ss:

Be it remembered that on this 21st day of November 1978, before me, a Notary Public in and for said State and County, came Realco Investment, by Terrence Gleason, Partner, to me personally known to be the same person who executed the foregoing instrument of writing and duly acknowledged the execution of the same. In testimony whereof I have hereunto set my hand and affixed my notarial seal the day and year above written.

Carolyn R. Owen, Notary Public
Carolyn R. Owen
My Appointment Expires: My Appointment Expires May 17, 1981

Know all men by these presents that we the undersigned owners of Lots 1 through 5 inclusive within the above described property do hereby consent to the plat of "Comotara Industrial Park Fifth Addition".

The Boeing Wichita Company, a division of Boeing Company

By: E. B. Sorgan
Director of Legal Department

STATE OF KANSAS, COUNTY OF SEDGWICK, ss:

Be it remembered on this 22nd day of December 1978, before me, a Notary Public in and for said State and County, came the Boeing Wichita Company, a division of Boeing Company, by E. B. Sorgan, Director of Legal Department for the Boeing Wichita Company, to me personally known to be the same person who executed the foregoing instrument of writing and duly acknowledged the execution of the same. In testimony whereof, I have hereunto set my hand and affixed my notarial seal the day and year above written.

Nancy A. Hanson, Notary Public
My Appointment Expires: May 24, 1980

Know all men by these presents that we the undersigned owners of Lots 6 through 24 inclusive within the above described property do hereby consent to the plat of "Comotara Industrial Park Fifth Addition".

The Fourth National Bank and Trust Company, Wichita, Kansas

By: J. B. Sowers, Vice President

STATE OF KANSAS, COUNTY OF SEDGWICK, ss:

Be it remembered on this ___ day of ___ 1978, before me, a Notary Public in and for said State and County, came The Fourth National Bank and Trust Company, Wichita, Kansas, by J. B. Sowers, Vice President for the Fourth National Bank and Trust Company, to be personally known to be the same person who executed the foregoing instrument of writing and duly acknowledged the execution of the same. In testimony whereof, I have hereunto set my hand and affixed my notarial seal the day and year above written.

Notary Public
My Appointment Expires:

Know all men by these presents that we the undersigned owners of Lots 25 through 32 inclusive within the above described property do hereby consent to the plat of "Comotara Industrial Park Fifth Addition".

The Continental N.A., New York City, New York, mortgagee on the above described property do hereby consent to the plat of "Comotara Industrial Park Fifth Addition".

The National N.A., New York, New York

By: Robert A. Fox
Attorney in fact for Continental N.A.

STATE OF KANSAS, COUNTY OF SEDGWICK, ss:

Be it remembered on this 21st day of November 1978, before me, a Notary Public in and for said State and County, came The Continental N.A., New York City, New York, by Robert A. Fox, attorney in fact for Continental N.A., to me personally known to be the same person who executed the foregoing instrument of writing and duly acknowledged the execution of the same. In testimony whereof, I have hereunto set my hand and affixed my notarial seal the day and year above written.

Carolyn R. Owen, Notary Public
Carolyn R. Owen
My Appointment Expires: