05/17/1999 16:27:28 SWS-82.dwg

PRIVATE STORM WATER SEWER TO SERVE

LOT 1, GOLDEN HILLS 6TH ADDITION

CITY OF WICHITA, KANSAS

Michael E. Lindebak, P.E. City Engineer

Private Project Number

868 PPS (607861)

MAY 1999

INDEX

Title / Plan / Profile Sheet	1
Inlet Detail	2
Copy Of Plat	3

GENERAL NOTES:

1. Underground utility service lines and overhead utility pole lines are to be adjusted as necessary by others prior to construction unless the plans specifically call for their adjustment by the Contractor or unless the plans specifically identify a utility to be adjusted by its owner during construction. Existing utilities and their location, as shown on the plans, represent the best information obtainable for design. The Contractor will be required to work around existing utilities within the right-of-way which do not conflict with proposed construction.

2. Contractor will be required to provide notice to utility companies a minimum of forty-eight (48) hours prior to any excavation, as follows:

   Kansas One-Call 687-2470

   The Contractor must notify the following in case of an emergency.

Cablevision	262-0661
or	263-2061
Kansas Gas Service	383-8650
KGE	383-8600
Peoples Gas Company	942-8811
Southwestern Bell Telephone Company	800-344-7233
City of Wichita Water Department	268-4908
City of Wichita Sewer Maintenance	268-4071

3. Contractor shall not start work on the project until the Project Inspector is assigned to the project and is present on the site. Any work done without inspection will be required to be uncovered for inspection.

4. The locations of the existing utilities and water lines are per city and utility company records and have not been field verified. In the event that there is a conflict with the proposed construction and existing utilities, the contractor shall make necessary adjustments or use fittings as needed and shall allow for such conditions in his bid.

5. All areas disturbed by construction operations shall be seeded with rye grass at a rate of 6 lbs. per 1000 sq. feet or as per city specs. Contractor to prepare ground to city specifications.

6. Trees and shrubs in public right-of-way which are in direct conflict with proposed new construction shall be removed by the Contractor with the Engineer's approval. Trees and shrubs which are not in direct conflict with proposed new construction shall be saved and protected from damage.

7. Rubble from the removal of miscellaneous structures and excess excavation which is to be wasted shall be disposed of on sites to be provided by the Contractor. These sites shall be approved by the Engineer as to suitability, appearance and site location. Locations that, in the opinion of the Engineer, will leave an unsightly appearance will not be approved. All disposal sites must be approved by the Kansas Department of Health and Environment. Material either stockpiled or disposed of in a flood plain would require a Kansas State Board of Agriculture permit. Any material dumped in waters of the United States or wetlands is subject to U.S. Corps. of Engineers permitting regulations. Any material buried or stockpiled beyond approved construction limits would require additional archaeological investigations unless buried in a previously approved borrow location.

8. The Contractor shall be responsible for preserving property irons. The Contractor will be required to re-establish any property irons which are damaged or destroyed by his construction operations. Such irons shall be re-established by a licensed land surveyor in accordance with state law.

9. Cuts made to paved surfaces on public property will be repaired by the City's contractor and charged against the owner/applicant. Unit repair prices are available from the City at 268-4418. A surcharge may be applicable: call 268-4418 for details. Repair costs to be paid prior to release of water service if water service is effected.

APPROVED AS NOTED
BY CITY ENGINEER OF WICHITA

Storm Sewers VRH 5/19/99

NOTE TO CONTRACTORS

Installation, inspection and testing for this project is to be provided by a Licensed Consulting Engineering Firm under contract with the Owner/Developer. Said inspection to be in accordance with the City of Wichita standard construction engineering practices and certified by a Licensed Professional Engineer. No work shall be performed in dedicated easements or public right-of-way by the Contractor without such inspection nor shall any work be commenced without written authorization by the City Engineer. All Construction and Materials shall comply with the City of Wichita Specifications and Standards (on file and available in the City Engineer's Office).

LEGAL DESCRIPTION:

Lot 1, Golden Hills 6th Addition, Wichita, Sedgwick County, Kansas.

BENCHMARK:

119th St. & West Central Ave.
City of Wichita Benchmark Disc 40' East and 40' South of Centerline Both. 58.92' SE of sec. cor. Iron. 21.7' west of face walk N/S. 13.6' north of walk E/W.

Elevation: 156.93 City Datum

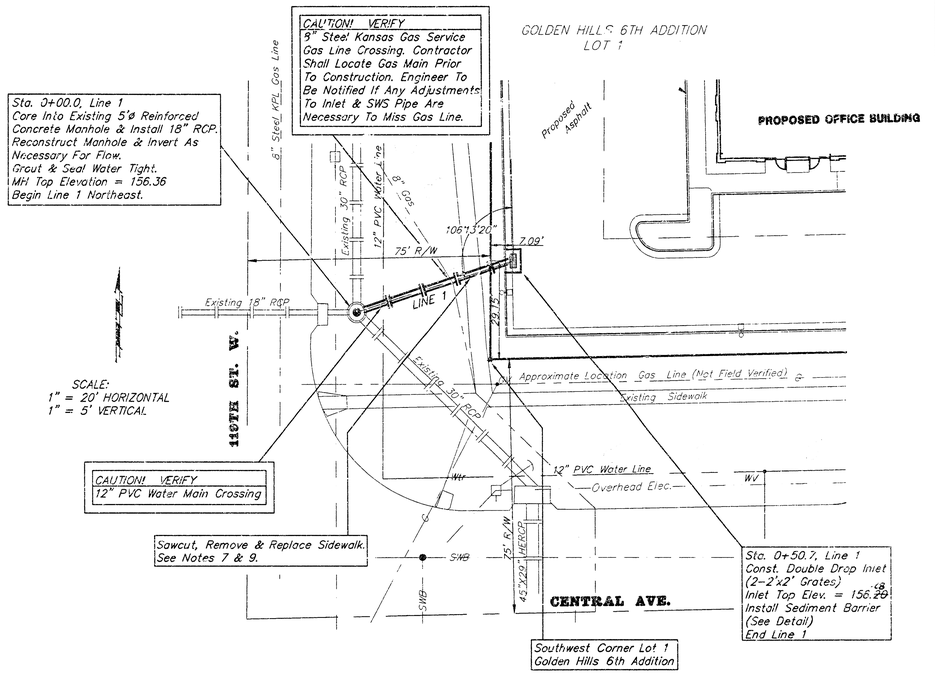

No Scale

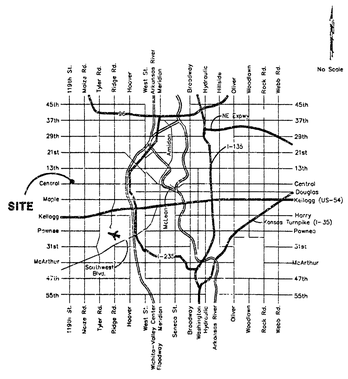

LOCATION MAP

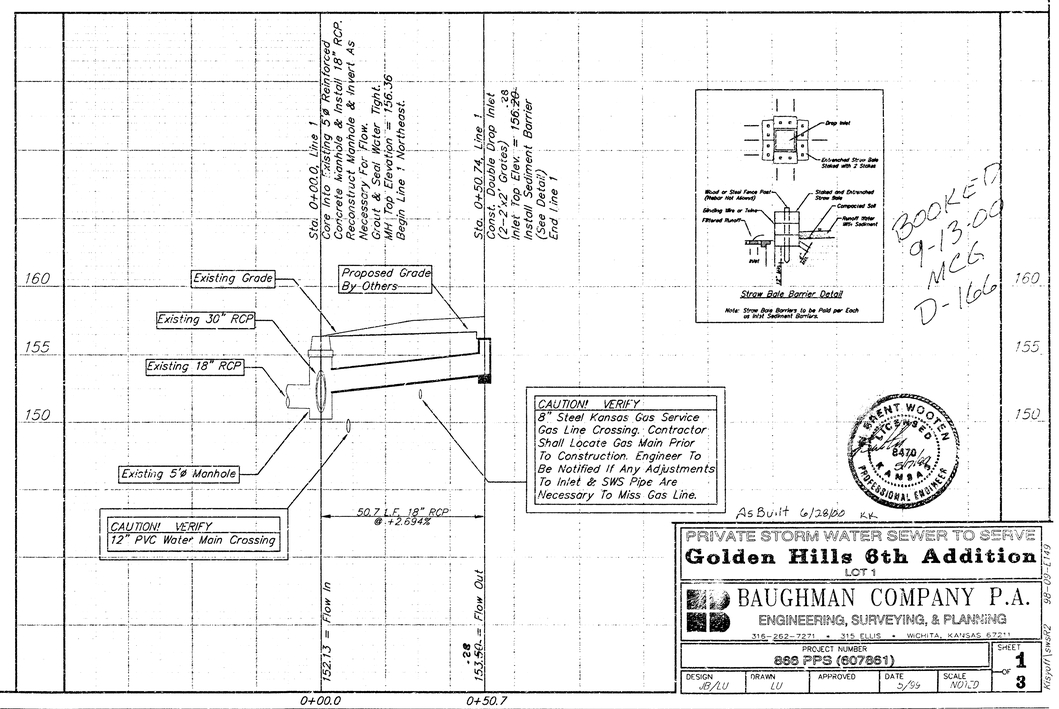

BOOKED 9-13-00 MCG D-166

BRENT WOOTEN LICENSED 8470 KANSAS PROFESSIONAL ENGINEER

As Built 6/28/00 K.V.

PRIVATE STORM WATER SEWER TO SERVE
Golden Hills 6th Addition
LOT 1

BAUGHMAN COMPANY P.A.
ENGINEERING, SURVEYING, & PLANNING
316-262-7271 • 315 ELLIS • WICHITA, KANSAS 67211

PROJECT NUMBER	SHEET
868 PPS (607861)	1 OF 3

DESIGN	DRAWN	APPROVED	DATE	SCALE
JB/LU	LU		5/99	NOTED

98-09-E149
Kisyuth1.swdr2

05/17/1999 16:42:33 Dropinlt2.dwg

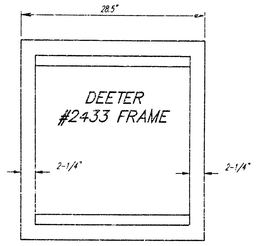

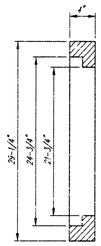

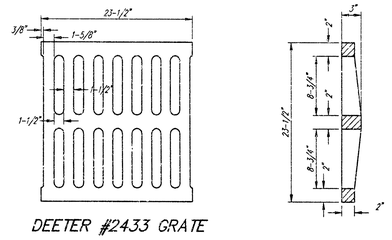

DEETER #2433 GRATE

NOTE: Grates shall be imprinted on the top surface with "CITY OF WICHITA" using letters at least 1" in height. Other marking methods may be approved by the engineer.

24" x 24" Frame and Grate Detail

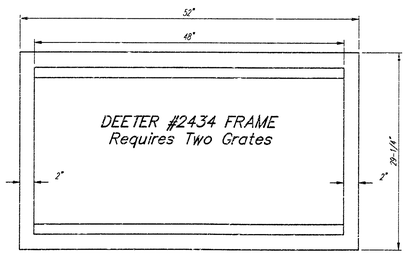

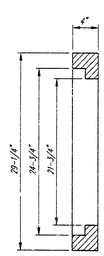

Double 24" x 24" Frame Detail

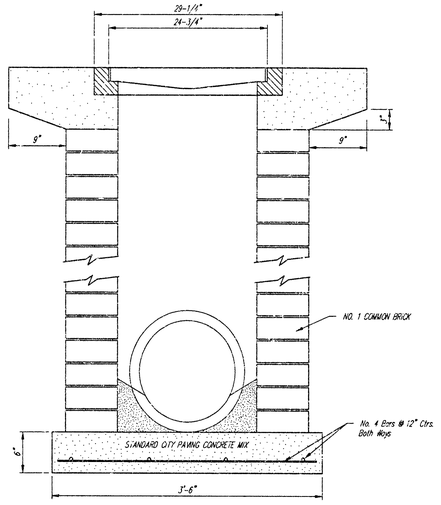

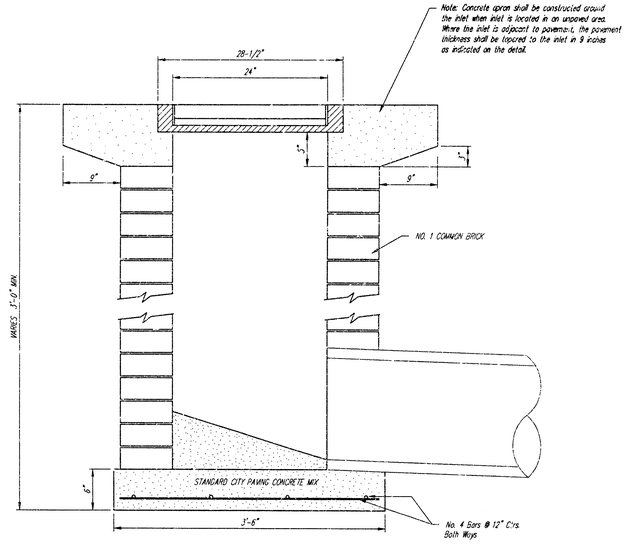

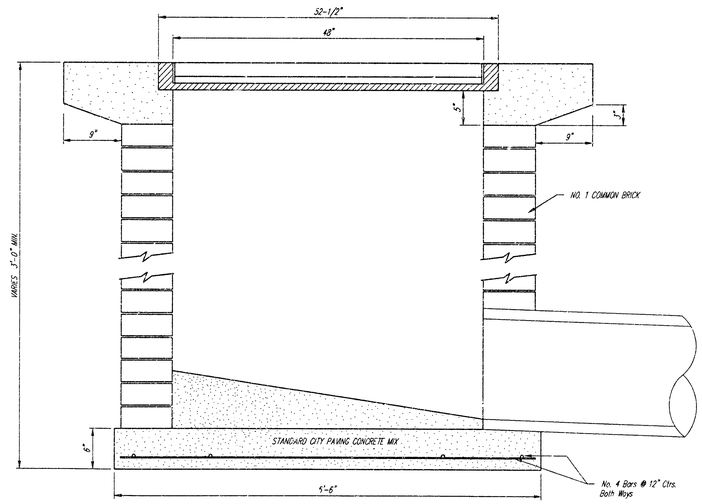

As Built 6/28/00 KK

City of Wichita Standard
Drop Inlet

BAUGHMAN COMPANY P.A.
ENGINEERING, SURVEYING, & PLANNING
316-262-7271 • 315 ELLIS • WICHITA, KANSAS 67211

PROJECT NUMBER	SHEET	OF
868 PPS (607861)	2	3

DESIGN	DRAWN	APPROVED	DATE	SCALE
C.O.W.	Staff	C.O.W.	5/99	None

90-03-E149
K:\sp\lt\Dropinlt2

Rm2 25 + 1/2 replot 7/11 9:54
25 9 99

GOLDEN HILLS 6TH ADDITION

WICHITA, KANSAS

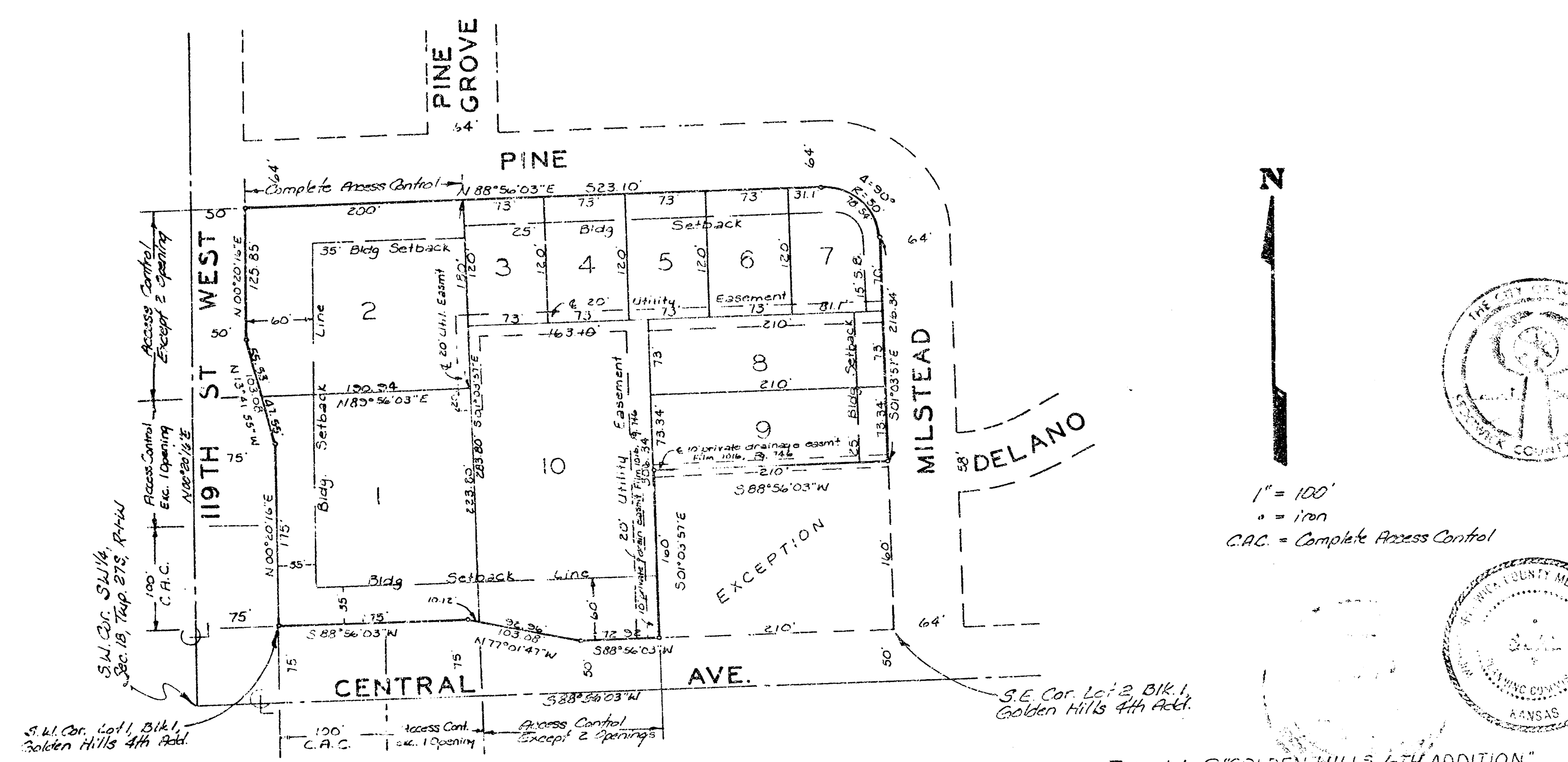

State of Kansas }
Sedgwick County } S.S. We, Baughman Company, P.A., Surveyors in aforesaid county and state do hereby certify that we have surveyed and platted "GOLDEN HILLS 6TH ADDITION," Wichita, Kansas, and that the accompanying plat is a true and correct exhibit of the property surveyed, described as all of Lot 1 and Lot 2, except that part described as beginning at the S.E. Corner of said Lot 2; thence (with an assumed bearing) S 88°56'03"W, along the south line of said Lot 2, 210 feet to the southerly most SW Corner of said Lot 2; thence N 01°03'57"W, along the west line of said Lot 2, 160 feet; thence N 88°56'03"E, 210 feet to the east line of said Lot 2; thence S01°03'57"E, along the east line of said Lot 2, 160 feet to the place of beginning, all in Block 1, Golden Hills 4th Addition, Wichita, Sedgwick County, Kansas.

Access Controls and Building Setback Lines being vacated by virtue of KSA 12-512(b).

Baughman Company, P.A.

Date __________ __________ Surveyor
William L. Korber

Know all men by these presents that we, the undersigned, have caused the land described in the surveyors certificate to be platted into Lots to be known as "GOLDEN HILLS 6TH ADDITION," Wichita, Kansas. The utility easements are hereby granted as indicated for the construction and maintenance of all public utilities. All abutters rights of access to or from Central Ave., over and across the south line of Lots 1 and 10 and to or from 119th St. West over and across the west line of Lots 1 and 2, and to or from Pine, over and across the north line of Lot 2, are hereby granted to the City of Wichita, provided however that Lot 1 shall have access to Central Ave. at 1 point over all except the west 100 feet of the south line thereof and that Lot 10 shall have access to Central Ave. at 2 points over the south line thereof and that Lot 1 shall have access to 119th St. West at 1 point over all except the south 100 feet of the west line thereof and that Lot 2 shall have access to 119th St. West at 2 points over the west line thereof, all as shall be determinded by the City Engineer of the City of Wichita, Kansas.

Westland Enterprises, Inc.

__________ President
H. William Solt

State of Kansas }
Sedgwick County } S.S. The foregoing instrument was acknowledged before me this 11th day of August, 1989, by H. William Solt, President of Westland Enterprises, Inc., on behalf of the corporation.

__________ Notary Public
Carolyn I. Woods

My Appt Exp. 6-10-93

6-10-93

This plat of "GOLDEN HILLS 6TH ADDITION," Wichita, Kansas has been submitted to and approved by the Wichita-Sedgwick County Metropolitan Area Planning Commission, Wichita, Kansas. Dated this 3rd day of August, 1989.
Wichita-Sedgwick County Metropolitan Area Planning Commission

__________ Chairman
Sue L. Crockett

__________ Secretary
Marvin S. Krout

This plat approved and all dedications shown hereon accepted by the City Council of Wichita, Kansas, this ____ day of __________ 1989.

__________ Mayor
Bob Knight

__________ City Clerk
John Moir

Entered on transfer record this ____ day of September, 1989.

__________ County Clerk
Don Wright

State of Kansas }
Sedgwick County } S.S. This is to certify that this plat has been filed for record in the office of the Register of Deeds this ____ day of __________, 1989, at ____ o'clock, __M, and is duly recorded.

__________ Register of Deeds
Pat Keffler

__________ Deputy
Ed Resa

We, the undersigned, holders of a mortgage on the above described property do hereby consent to this plat of "GOLDEN HILLS 6TH ADDITION," Wichita, Kansas.

State Bank of Colwich

__________ President
C.J. Sullentrop

State of Kansas }
Sedgwick County } S.S. The foregoing instrument was acknowledged before me this ____ day of Aug. 1989, by C.J. Sullentrop, President of State Bank of Colwich, on behalf of the bank.

__________ Notary Public
Jolene Winter

My Appt Exp. 4-29-92.

JOLENE WINTER
NOTARY PUBLIC
STATE OF KANSAS
My Appt Exp. 4-29-92

16 06 04 07

PC 6-5