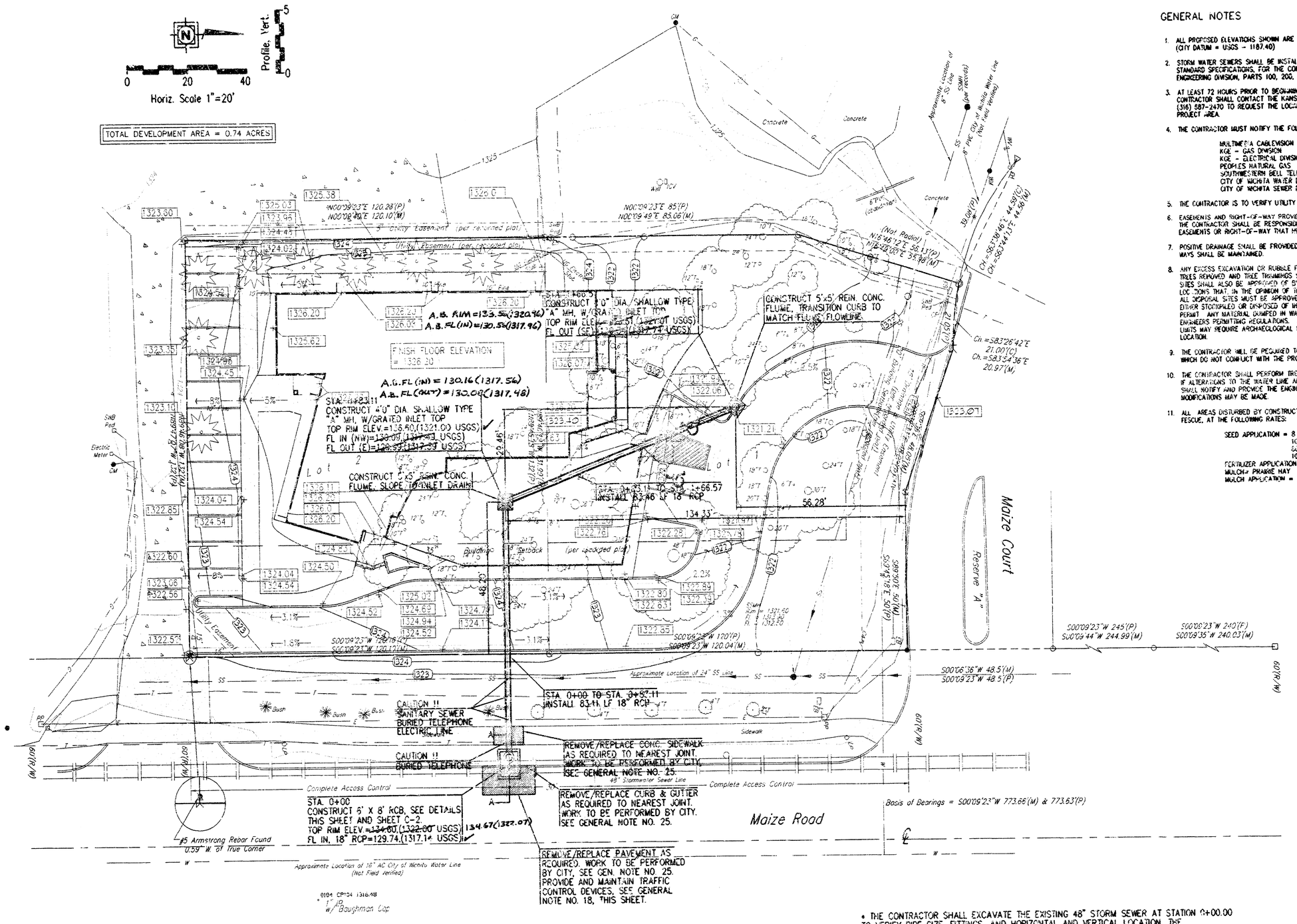

GENERAL NOTES

1. ALL PROPOSED ELEVATIONS SHOWN ARE CITY DATUM. SURVEY DATA IS PROVIDED IN USGS DATUM. (CITY DATUM + 1325 = 1187.40)
2. STORM WATER SEWERS SHALL BE INSTALLED IN ACCORDANCE WITH "THE CITY OF WICHITA STANDARD STANDARD SPECIFICATIONS, FOR THE CONSTRUCTION OF CITY PROJECTS", DEPARTMENT OF PUBLIC WORKS ENGINEERING DIVISION, PARTS 100, 200, 300, 400, 800, AND 900
3. AT LEAST 72 HOURS PRIOR TO BEGINNING ANY EXCAVATION (EXCLUDING WEEKENDS AND HOLIDAYS), THE CONTRACTOR SHALL CONTACT THE KANSAS ONE-CALL SYSTEM, A UTILITY LOCATION SERVICE, AT (316) 687-2470 TO REQUEST THE LOCAL UTILITY COMPANIES TO LOCATE ANY EXISTING LINES WITHIN THE PROJECT AREA
4. THE CONTRACTOR MUST NOTIFY THE FOLLOWING IN CASE OF AN EMERGENCY:

MULTIMEDIA CABLEVISION	262-4270
KGE – GAS DIVISION	251-6251
KGE – ELECTRICAL DIVISION	261-6251
PEOPLES NATURAL GAS	267-8811
SOUTHWESTERN BELL TELEPHONE COMPANY	268-2245
CITY OF WICHITA WATER DEPARTMENT	268-4555
CITY OF WICHITA SEWER DEPARTMENT	268-4555

5. THE CONTRACTOR IS TO VERIFY UTILITY LOCATIONS PRIOR TO CONSTRUCTION OF THE PROJECT.
6. EASEMENTS AND RIGHT-OF-WAY PROVIDED BY THE OWNER FOR THE PROJECT ARE SHOWN IN THE PLANS. THE CONTRACTOR SHALL BE RESPONSIBLE FOR THE ACQUISITION OF ANY ADDITIONAL TEMPORARY CONSTRUCTION EASEMENTS OR RIGHT-OF-WAY THAT HE DESIRES TO USE IN COMPLETING THE WORK.
7. POSITIVE DRAINAGE SHALL BE PROVIDED FOR ALL AREAS ON OR NEAR SPOIL AREAS. NATURAL DRAINAGE WAYS SHALL BE MAINTAINED.
8. ANY EXCESS EXCAVATION OR RUBBLE FROM THE REMOVAL OF MISCELLANEOUS STRUCTURES INCLUDING ANY TREES REMOVED AND TREE TRIMMINGS SHALL BE DISPOSED OF ON SITE PROVIDED BY THE CONTRACTOR. THESE SITES SHALL ALSO BE INSPECTED OF BY THE ENGINEER AS TO SUITABILITY, APPEARANCE, AND SITE LOCATION. LOCATIONS THAT, IN THE OPINION OF THE ENGINEER, LEAVE AN UNSIGHTLY APPEARANCE SHALL NOT BE APPROVED. ALL DISPOSAL SITES MUST BE APPROVED BY THE KANSAS DEPARTMENT OF HEALTH AND ENVIRONMENT. MATERIAL DISPOSED OF OR DISPOSED OF IN A FLOOD PLAIN SHALL REQUIRE A KANSAS STATE BOARD OF AGRICULTURE DIVISION STOCKPILES OF DISPOSED OF IN A FLOOD PLAIN SHALL REQUIRE A KANSAS STATE BOARD OF AGRICULTURE PERMIT. ANY MATERIAL DUMPED IN WATERS OF THE UNITED STATES OR WETLANDS IS SUBJECT TO U.S. CORPS OF ENGINEERS PERMITTING REGULATIONS. ANY MATERIAL BURIED OR STOCKPILED BEYOND APPROVED CONSTRUCTION LIMITS MAY REQUIRE ARCHAEOLOGICAL INVESTIGATIONS UNLESS BURIED IN A PREVIOUSLY APPROVED DISPOSAL LOCATION.
9. THE CONTRACTOR WILL BE REQUIRED TO WORK AROUND EXISTING UTILITIES WITHIN THE RIGHT-OF-WAY WHICH DO NOT CONFLICT WITH THE PROPOSED CONSTRUCTION.
10. THE CONTRACTOR SHALL PERFORM BRUSHING OPERATIONS AT LEAST 50 FEET AHEAD OF PIPE LAYING. IF ALTERATIONS TO THE WATER LINE ARE REQUIRED BECAUSE OF UTILITY CONFLICTS, THE CONTRACTOR SHALL NOTIFY AND PROVIDE THE ENGINEER WITH THE EXACT LOCATION OF THE CONFLICT SO ANY PLAN MODIFICATIONS MAY BE MADE.
11. ALL AREAS DISTURBED BY CONSTRUCTION INCLUDING STAGING AREAS, SHALL BE REPLANTED WITH FESCUE, AT THE FOLLOWING RATES:

SEED APPLICATION = 8 LB./1,000 SQ. FT.
10% PERENNIAL RYE GRASS
30% TALL FESCUE
10% BLUEGRASS
FERTILIZER APPLICATION (N-P-K) = 12-24-12
MULCH= PRAIRIE HAY
MULCH APPLICATION = 90 LBS/1,000 SQ. FT.

12. THE CONTRACTOR SHALL RESTORE ALL DITCHES, SWALES, ROAD SHOULDERS, PAVEMENTS, ENTRANCES, AND BANK LINES TO THEIR ORIGINAL SLOPES AND GRADES.
13. WHERE EXISTING ENTRANCE PIPE, DRAINAGE PIPE, HEADWALLS, SIGNS, MAILBOXES, FENCES, AND LANDSCAPING CONFLICT WITH THE PROPOSED WORK HEREIN THEY SHALL BE REMOVED AND RESET OR REPLACED AS REQUIRED. THE RESETTING OR REPLACEMENT OF ALL THE AFOREMENTIONED ITEMS SHALL BE CONSIDERED SUBSIDIARY TO SITE PREPARATION COSTS.
14. EXISTING UTILITIES AND THEIR LOCATION, AS SHOWN ON THE PLANS, REPRESENT THE BEST AVAILABLE INFORMATION. IT SHOULD BE NOTED THAT OTHER BURIED LINES AND CABLE MAY EXIST WHICH ARE NOT SHOWN ON THESE PLANS. THE CONTRACTOR SHALL EXERCISE EXTREME CAUTION DURING TRENCHING OPERATIONS TO AVOID DAMAGING THESE LINES AND CABLES. ANY UTILITIES DAMAGED SHALL BE REPLACED OR REPAIRED IMMEDIATELY AS DIRECTED BY THE ENGINEER AT THE CONTRACTOR'S EXPENSE. THE CONTRACTOR SHALL PROTECT FROM DAMAGE AND SUPPORT EXISTING UTILITIES THROUGH CONSTRUCTION AS APPROVED BY THE UTILITY OWNER AND THE ENGINEER AT THE CONTRACTOR'S EXPENSE.
15. THE CONTRACTOR SHALL BE RESPONSIBLE FOR PRESERVING EXISTING PROPERTY PINS AND RIGHT-OF-WAY MONUMENTS. THE CONTRACTOR SHALL BE REQUIRED TO REESTABLISH ANY PROPERTY PINS OR RIGHT-OF-WAY MONUMENTS WHICH ARE DAMAGED OR DESTROYED BY HIS CONSTRUCTION OPERATIONS. SUCH PINS OR MONUMENTS SHALL BE REESTABLISHED BY A LICENSED LAND SURVEYOR IN ACCORDANCE WITH STATE LAWS.
16. THE CONTRACTOR SHALL VERIFY HORIZONTAL AND VERTICAL LOCATION, TYPE, SIZE, AND CLASS OF EXISTING STORM SEWERS PRIOR TO CONSTRUCTION. EXISTING STORM SEWER LOCATIONS AS SHOWN ON THE PLANS ARE APPROXIMATE. THE CONTRACTOR SHALL MAKE ALTERMENTS AS REQUIRED AND APPROVED BY THE ENGINEER. PROVISIONS FOR AND INSTALLATION OF PIPE ADAPTERS, SHORT SECTIONS OF PIPE, AND COUPLERS SHALL BE SUBSIDIARY TO OTHER PAY ITEMS OF WORK.
17. THE CONTRACTOR SHALL NOT START WORK ON THE PROJECT UNTIL THE PROJECT INSPECTOR IS ASSIGNED TO THE PROJECT AND IS PRESENT ON THE SITE. ANY WORK PERFORMED WITHOUT INSPECTION IS SUBJECT TO BE UNCOVERED FOR INSPECTION.
18. INTER-URBAN TRAFFIC GENERATED OUTSIDE THE PROJECT AREA AND LOCAL BUSINESS OR RESIDENTIAL TRAFFIC GENERATED WITHIN THE PROJECT AREA ARE TO BE CARRIED THROUGH CONSTRUCTION AS REQUIRED BY THE CITY OF WICHITA TRAFFIC ENGINEERING DEPT. THE CONTRACTOR SHALL UTILIZE BARRICADES, SIGNS, GUARDS, AND FLAG MEN IN ACCORDANCE WITH THE MANUAL ON UNIFORM TRAFFIC CONTROL DEVICES.
19. EACH BIDDER SHALL VISIT THE SITE OF THE PROJECT BEFORE SUBMITTING THE PROPOSAL FOR THIS WORK SO THAT HE WILL BE FULLY INFORMED OF THE EXISTING ABOVE GROUND AND SUBSURFACE FIELD CONDITIONS AND THE OBSTACLES UNDER WHICH OR ENCUMBERED FROM AWARD OF THE CONTRACT THE CONTRACTOR WILL NOT BE ENTITLED ANY ADDITIONAL COMPENSATION WITH REGARDS TO TIME AND MONEY FOR CONDITIONS THAT MIGHT HAVE BEEN EVALUATED DURING INSPECTION OF THE SITE.
20. ANY STREET CURBS OR OTHER EXISTING PAVING IMPROVEMENTS, DAMAGED BY THE CONTRACTOR SHALL BE REPLACED IN KIND TO THE NEAREST EXISTING CONSTRUCTION POINT OR TO LIMITS APPROVED BY THE CITY ENGINEER.
21. ALL SAW CUTS SHALL BE FULL DEPTH. THIS WORK SHALL NOT BE PAID FOR DIRECTLY; BUT SHALL BE SUBSIDIARY TO SITE PREPARATION COSTS.
22. THE CONTRACTOR SHALL SATISFY HIMSELF OF THE SUBSURFACE CONDITIONS PRIOR TO CONSTRUCTION.
23. ALL CONNECTIONS OF EXISTING PIPES TO NEW STRUCTURES OR NEW STRUCTURES TO EXISTING PIPES SHALL BE CONSIDERED SUBSIDIARY TO THE STORM SEWER ITEM.
24. TREES AND SHRUBS WHICH ARE IN DIRECT CONFLICT WITH PROPOSED NEW CONSTRUCTION SHALL BE REMOVED BY THE CONTRACTOR WITH THE ARCHITECTS APPROVAL. TREES AND SHRUBS WHICH ARE NOT IN DIRECT CONFLICT WITH PROPOSED NEW CONSTRUCTION SHALL BE SAVED AND PROTECTED FROM DAMAGE. COSTS FOR TREES TO BE REMOVED, AS SHOWN IN THE PLANS, SHALL BE SUBSIDIARY TO PREPARATION COSTS.
25. CUTS MADE TO PAVED SURFACES ON PUBLIC PROPERTY WILL BE REPAIRED BY THE CITY'S CONTRACTOR AND CHARGED AGAINST THE OWNER/APPLICANT. UNIT REPAIR PRICES ARE AVAILABLE FROM THE CITY AT 268-4416. A SURCHARGE MAY BE APPLICABLE; CALL 268-4418 FOR DETAILS. REPAIR COSTS TO BE PAID PRIOR TO RELEASE OF WATER SERVICE IF WATER SERVICE IS AFFECTED.

SURVEYOR'S NOTES:

1. The utility locations represented on this survey were compiled by both field observation and information from the various utility companies. If any construction or reticulation is planned for this site the various utility companies should be requested to verify their locations in the field prior to final design or construction.
2. Baughman Company, P.A. has not researched any title examination of subject property. An abstract or title insurance company would need to be contacted to research and provide to us any easements, rights-of-ways or dedications.
3. Subject property contains 32,993.2 Sq. Ft. or 0.757 Acres.
4. According to scaled location on FEMA FIRM 200328 0020, B, and 0020, effective date June 26, 1997 subject property lies within and ASB.
5. Benchmark: "□" Top of Curb 45'± West of the SE. Corner of Lot 4, Park West Plaza. Elevation = 1324.14 M.S.L.
6. Site Benchmark: Top of 1/2" Iron Pipe at the SE. Corner of Lot 1 Parkwest Plaza. Elevation = 1321.09 M.S.L.
7. Minimum Pad Elevation = 1325.0 M.S.L. (per recorded plat) Minimum Pad Elevation = 1326.2 M.S.L. (per revised FEMA FIRM dated June 26, 1997).

(CM) = Chord
(C) = Calculated
(M) = Measured
(P) = Plotted

● = #4 Baughman Rebar Set
○ = #4 S.R.B. Rebar Found
□ = 1/2" P.E.C. Iron Pipe Found
△ = #4 Baughman Rebar Found
LC = Chiseld Cross Set
⊙ = 1/2" Iron Pipe Found
◎ = #5 Rebar Found
◉ = #5 Armstrong Rebar Found
Bush = Landscape Bush
Pine = Pine Tree
Tree = Tree and Size
CTV = Cable TV Pedestal
EB = Electric Box
FH = Fire Hydrant
GM = Gas Meter
ICV = Irrigation Control Valve - Valve Box
LP = Light Pole
PP = Power Pole
SSMH = Sanitary Sewer Manhole
SWB Ped = Southwestern Bell Pedestal
WELL = Cased Well
WM = Water Meter
WV = Water Valve
X = Trees to be removed

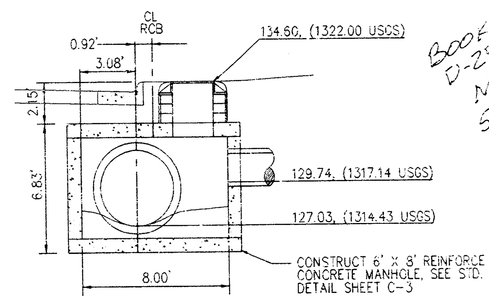

SECTION A–A
(1"=5')

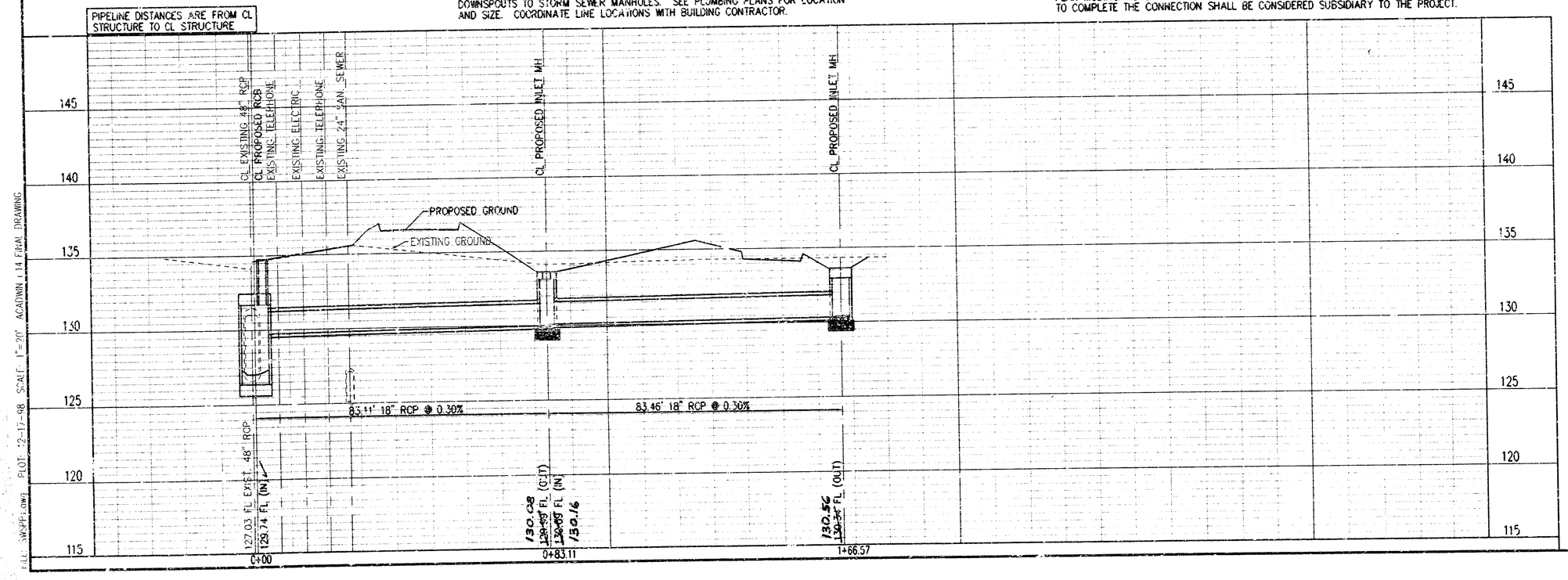

* THE CONTRACTOR SHALL INSTALL BURIED RAIN LEADER LINES FROM ROOF DRAIN DOWNSPOUTS TO STORM SEWER MANHOLES. SEE PLUMBING PLANS FOR LOCATION AND SIZE. COORDINATE LINE LOCATIONS WITH BUILDING CONTRACTOR.

* THE CONTRACTOR SHALL EXCAVATE THE EXISTING 48" STORM SEWER AT STATION 0+00.00 TO VERIFY PIPE SIZE, FITTINGS, AND HORIZONTAL AND VERTICAL LOCATION. THE CONTRACTOR SHALL REPORT HIS FINDINGS TO THE ARCHITECT SO THAT ANY NECESSARY PLAN MODIFICATIONS MAY BE MADE. ANY ADDITIONAL LABOR OR MATERIALS NECESSARY TO COMPLETE THE CONNECTION SHALL BE CONSIDERED SUBSIDIARY TO THE PROJECT.

SWS TO SERVE LOTS 1 & 2 PARK WEST PLAZA

PROJ. NO. 875PPS

NOTE TO CONTRACTOR:

INSPECTION AND TESTING FOR THIS PROJECT IS TO BE PROVIDED BY A LICENSED CONSULTING ENGINEERING FIRM UNDER CONTRACT WITH THE OWNER/DEVELOPER. SAID INSPECTION TO BE IN ACCORDANCE WITH THE CITY OF WICHITA STANDARD CONSTRUCTION ENGINEERING PRACTICES AND CERTIFIED BY A LICENSED PROFESSIONAL ENGINEER. NO WORK SHALL BE PERFORMED IN DEDICATED EASEMENTS OR THE PUBLIC RIGHT-OF-WAY BY THE CONTRACTOR WITHOUT SUCH INSPECTION NOR SHALL ANY WORK BE COMMENCED IN DEDICATED EASEMENTS OR PUBLIC RIGHT-OF-WAY WITHOUT WRITTEN AUTHORIZATION BY THE CITY ENGINEER.

BY CITY ENGINEER OF WICHITA

STORM SEWERS VRH 12/23/98

CITY OF WICHITA PROJECT NO: 875PPS (607861)

CHRISTOPHER R. YOUNG LICENSED 11315 PROFESSIONAL ENGINEER 12-17-98

PROJECT INSPECTED & ASBUILT BY BAUGHMAN COMPANY, P.A. 1/00 JMN

YOUNG & ASSOCIATES, PA
Civil and Environmental Engineers
100 South Georgia
Derby, Kansas, 67037
Tele: (316) 788-3532
Fax: (316) 788-4408

City of Wichita
Sedgwick County, Kansas

18" STORM WATER SEWER PLAN / PROFILE

Park West Plaza
Lots 1 and 2, ~~Parkwest Addition~~, Wichita, Ks.
Childspot Daycare Center

City Proj. No.: 875PPS (607861)	Eng.: CRY	Tech.: DAS, DJM
Y&A Proj. No.: 98-074-126	Scale: 1"=20'(H) / 1"=5'(V)	
Date: 12-17-98 (FOR CONSTRUCTION)	Sheet No. C-1 of 3	

PLOT: 12-17-98 SCALE: 1"=20' ACAD\WIN = 14 FIRM DRAWING

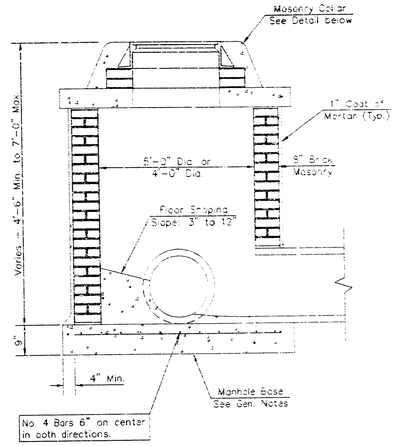

SHALLOW TYPE "A" MANHOLE

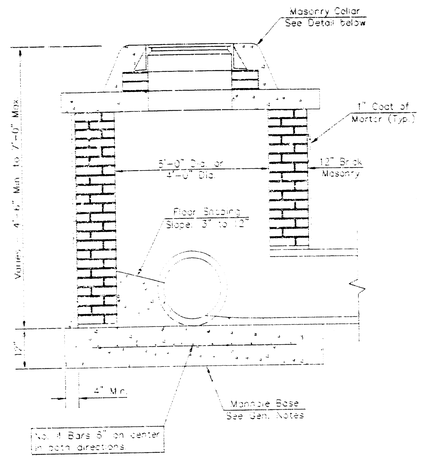

SHALLOW TYPE "B" MANHOLE

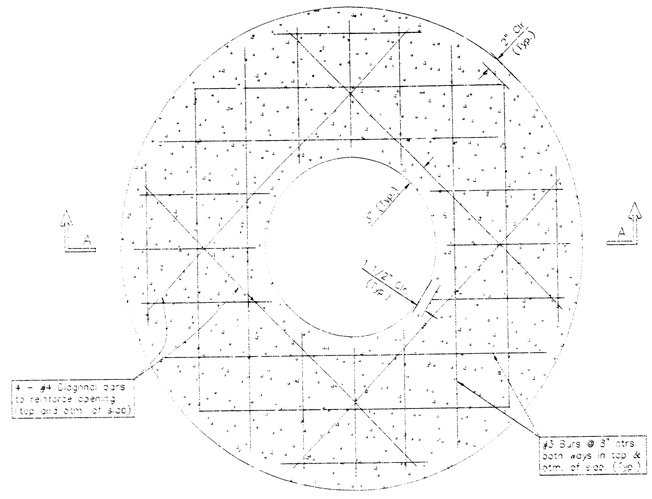

PLAN

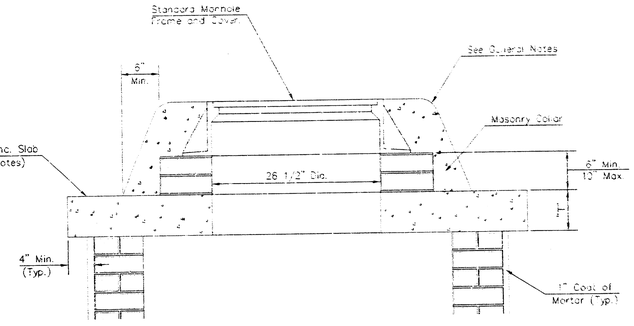

MASONRY COLLAR DETAIL

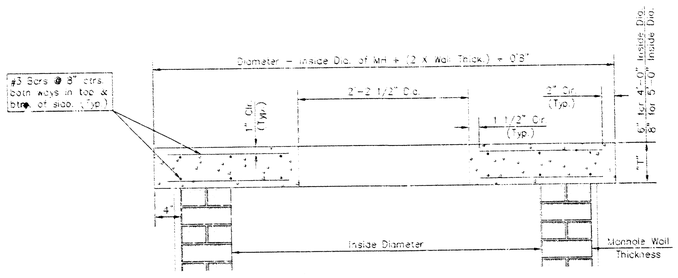

SECTION A-A

FLAT CONCRETE SLAB DETAILS

GENERAL NOTES

1. Mortar used in masonry construction shall contain 8 sacks of cement per cubic yard. Concrete used in manhole bases shall conform to the requirements of concrete for concrete pavement construction as specified in the city standard paving specifications using city concrete cement mix without air entraining admixture. Mortar shall be placed around the manhole ring as shown on the drawings when manholes are constructed in unpaved areas. Type "A" shallow manholes can be used on sewers when the manhole is not located within public street pavement. Manholes constructed where pipe sizes are smaller than 24" shall have an inside diameter of 4'. Manholes constructed where pipe sizes are 24" or larger shall have an inside diameter of 5'. Completed manhole shall be without leaks and water tight.

2. Reinforcing steel shall be installed in the manhole bases and shall consist of no. 4 bars placed on 6" centers in both directions. The manhole base reinforcement shall be placed 6" above the bottom of the manhole base. All costs for furnishing and installing reinforcing steel shall be included in the unit price bid for the manhole.

3. The floors of all manholes shall be shaped with flow channels such that the manholes will be self cleaning and free of areas where solids could be deposited as sewage flows through the manhole from an inlet pipes to the outlet pipe. Flow channels shall be formed to match the bottom halves of the inflowing pipes and the outflowing pipe as shown by the drawings. Manhole floors shall have slopes of 3 inches per foot in the areas outside of the flow channels sloped toward the flow channels. Pipes laid through manholes shall have the top half removed to neat lines to the full inside diameter of the manhole. Manhole floors shall then be shaped around the bottom half of the pipe which forms the flow channel.

4. Pipes installed within the excavation made for the manhole shall be cradled with concrete to the limits of the manhole excavation. When clay pipe is used, the cradle shall extend to the first joint outside the manhole. The cradle shall be terminated at the clay pipe joint in a manner which will maintain the flexibility of the joint. Cost of cradle within manhole excavation or to clay pipe joints adjacent to manhole shall be included in the unit price bid for the manhole.

5. Manhole cover castings and manhole frame castings shall conform to the requirements as indicated in the standard specifications and as shown in the standard detail drawings.

6. The crowns of inflowing pipes shall never be set lower than the crown of the outflowing pipe.

7. Standard shallow manholes type "A" and "B" shall be paid for at the unit price bid per each for the type and diameter indicated. Standard special shallow manholes type "A" and "B" shall be paid for at the unit price bid per each for the type indicated. All standard shallow manhole diameters will be 4' unless indicated otherwise.

8. All brick used in manhole construction shall meet Grade SW of ASTM C652 or C62-87.

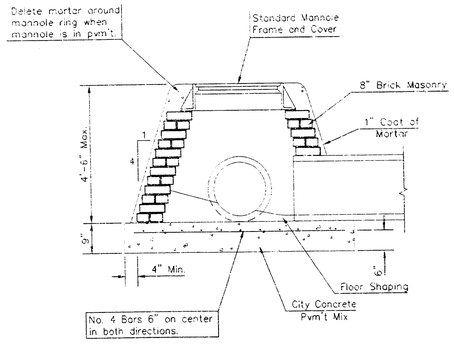

SPECIAL SHALLOW TYPE "A" MANHOLE

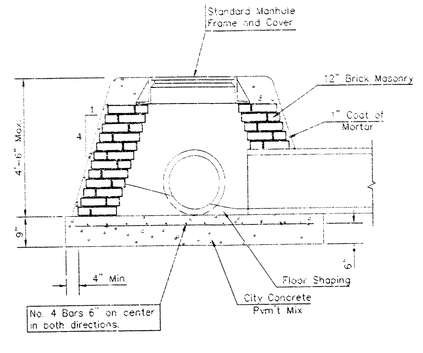

SPECIAL SHALLOW TYPE "B" MANHOLE

THE CITY OF WICHITA

CITY ENGINEER'S OFFICE
CITY HALL - SEVENTH FLOOR
455 NORTH MAIN STREET
WICHITA, KANSAS 67202
(316) 268-4500
(316) 268-4514 FAX

STANDARD/SPECIAL SHALLOW MANHOLES TYPE 'A' & 'B'

W. E. LINDEBAK P.E. - CITY ENGINEER

PROJECT NUMBER	INDEX CODE
XXX-XXXXX	XXXXXX
DATE	SHEET 02 OF 3
MAR 96	

FILE: DETAIL.dwg PLOT: 12-17-98 SCALE: 1"=20' ACADWIN v.14 FINAL DRAWING

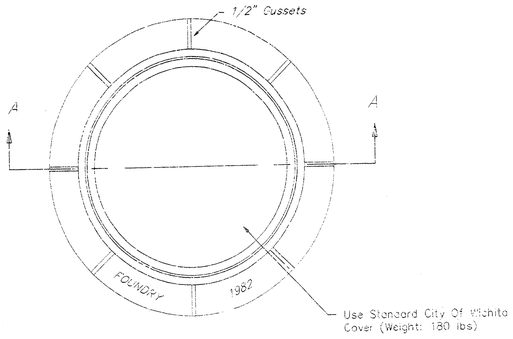

TOP VIEW

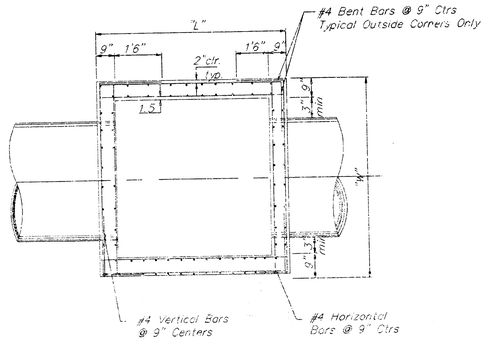

NOTE:
Bend Bars Not More Than 8" to Clear Pipes, or Cut Bars 2" Clear of Pipe, as Necessary.

SECTION B-B

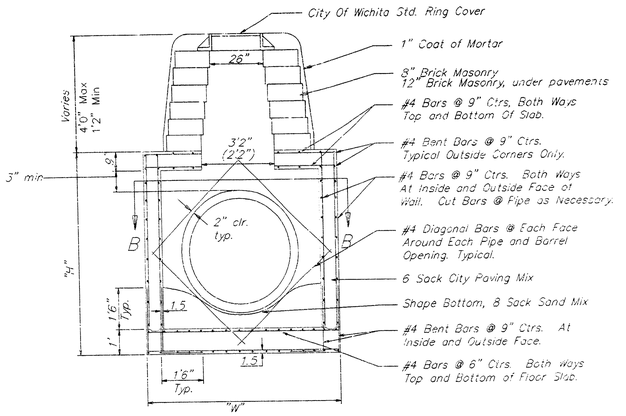

REINFORCED CONCRETE MANHOLE
STACK 2.33' TO 4'0"

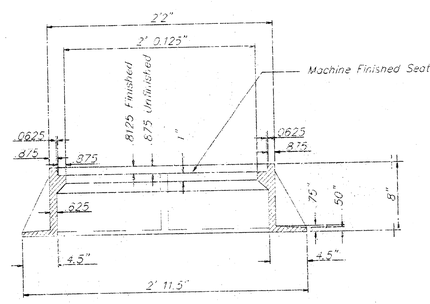

SECTION A--A

MANHOLE FRAME
Weight: 240 Lbs.

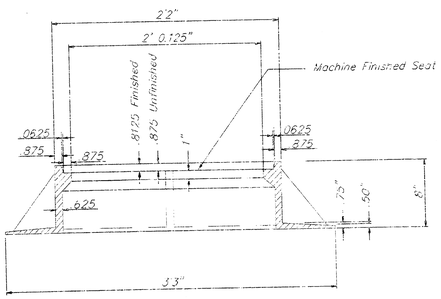

WIDE FLANGE RING
Weight: 735 Lbs.

GENERAL NOTES:

1. MORTAR USED IN MASONRY CONSTRUCTION SHALL CONTAIN 8 SACKS OF CEMENT PER CUBIC YARD. CONCRETE USED IN MANHOLE WALLS AND BASES SHALL CONFORM TO THE REQUIREMENTS FOR CONCRETE PAVEMENT CONSTRUCTION AS SPECIFIED IN THE CITY STANDARD PAVING SPECIFICATIONS, USING CITY CONCRETE PAVEMENT MIX WITHOUT AIR ENTRAINING ADMIXTURE. MORTAR SHALL BE PLACED AROUND THE MANHOLE RING AS SHOWN ON THE DRAWINGS WHEN MANHOLES ARE CONSTRUCTED IN UNPAVED AREAS. COMPLETED MANHOLE SHALL BE WITHOUT LEAKS AND WATER TIGHT.

2. THE FLOORS OF ALL MANHOLES SHALL BE SHAPED WITH FLOW CHANNELS SUCH THAT THE MANHOLES WILL BE SELF CLEANING. USING 8-SACK SAND MIX CONCRETE. FLOW CHANNELS SHALL BE FORMED TO MATCH THE BOTTOM HALVES OF THE INFLOWING PIPES AND THE OUTFLOWING PIPE. MANHOLE FLOORS SHALL HAVE SLOPES OF 3 INCHES PER FOOT IN THE AREAS OUTSIDE OF THE FLOW CHANNELS SLOPED TOWARD THE FLOW CHANNELS.

3. MANHOLE COVER CASTINGS AND MANHOLE FRAME CASTINGS SHALL CONFORM TO THE REQUIREMENTS AS INDICATED IN THE STANDARD SPECIFICATIONS AND AS SHOWN IN THE STANDARD DETAIL DRAWING.

4. THE ENDS OF ALL PIPES IN MANHOLES SHALL BE CUT OFF FLUSH WITH THE INSIDE FACE OF MANHOLE WALL.

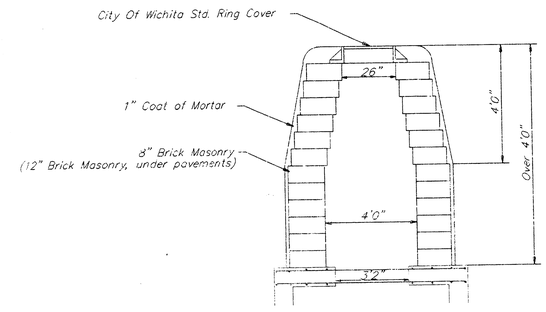

MANHOLE STACK OVER 4'0"

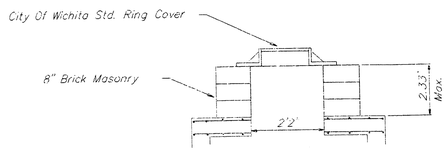

MANHOLE STACK LESS THAN 2.33'

REF. DETAIL7.dwg PLOT: 12-17-96 SCALE: 1"=20' ACADWIN r.14 FINAL DRAWING

THE CITY OF WICHITA
CITY ENGINEER'S OFFICE
CITY HALL - SEVENTH FLOOR
455 NORTH MAIN STREET
WICHITA, KANSAS 67202
(316) 268-4501
(316) 268-4114 FAX

REINFORCED CONCRETE MANHOLE

M. E. LINDEBAK P.E. - CITY ENGINEER

PROJECT NUMBER	INDEX CODE
XXX-XXXXX	XXXXXX
DATE: MAR 96	SHEET C3 OF 3

14 02 03 02