STORM SEWER IMPROVEMENTS

to serve

QUIKTRIP CANYON PROPERTIES ADDITION

Private Project Number

880PPS

Index Code

807861

CITY OF WICHITA, KANSAS

Michael E. Lindebak, P.E. City Engineer

GENERAL NOTES:

1. Contractor will be required to provide notice to utility companies a minimum of twenty-four (24) hours prior to any excavation, as follows:

   Kansas One-Call 687-2470

   The Contractor must notify the following in case of an emergency:

Multimedia Cablevision	262-0661
K.P.L. Gas Service Company	383-8650
Kansas Gas & Electric Company	383-8600
Peoples Gas Company	342-8350
Southwestern Bell Telephone Company	1-571-2611
City of Wichita Water Dept.	268-4908
City of Wichita Traffic Engineering	269-4416

2. Underground utility service lines and overhead utility pole lines are to be adjusted as necessary by others prior to construction unless the plans specifically call for their adjustment by the Contractor or unless the plans specifically identify a utility to be adjusted by its owner during construction. Existing utilities and their location, as shown on the plans, represent the best information obtainable for design. The Contractor will be required to work around existing utilities within the right-of-way which do not conflict with proposed construction.

3. Trees and shrubs in public right-of-way which are in direct conflict with proposed new construction shall be removed by the Contractor with the Engineer's approval. Trees and shrubs which are not in direct conflict with proposed new construction shall be saved and protected from damage.

4. The Contractor shall give all property owners and/or tenants of developed property abutting the construction of this project a minimum of ten (10) days advance notice prior to start of construction.

5. The Contractor shall be responsible for preserving property irons. The Contractor will be required to re-establish any property irons which are damaged or destroyed by his construction operations. Such irons shall be re-established by a licensed land surveyor in accordance with state laws.

6. All areas disturbed by construction operations shall by seeded with rye grass at a rate of 300 lbs/acre immediately following construction in that area. Prior to seeding, area shall be prepared per City specs.

7. The Contractor shall be responsible for maintaining continuous flow of storm sewer during construction.

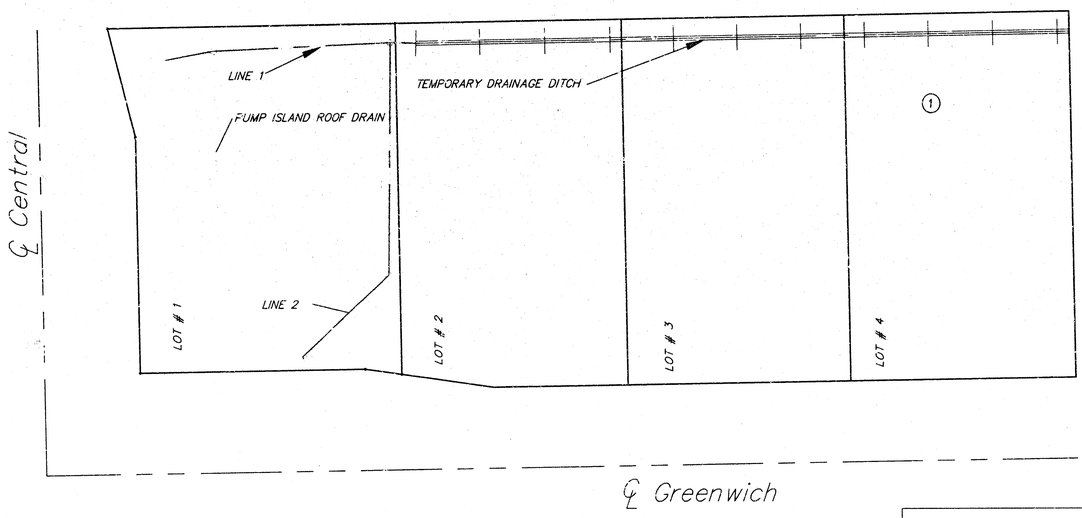

SCALE:
1" = 50'
• = IRON

BENCHMARKS:

STEP NAIL IN NORTHEST FACE POWER POLE AT SOUTEAST CORNER CENTRAL AVENUE AND GREENWICH ROAD.
ELEV.= 191.30 CITY DATUM

STEP NAIL IN WEST FACE POWER POLE, 450' SOUTH AND 40' EAST OF THE CENTERLINES OF CENTRAL AVENUE AND GREENWICH ROAD.
ELEV.= 192.12 CITY DATUM.

INDEX:

Title Sheet	1
Line 1	2
Line 2	3
Ditch	4
Ditch Cross Section Profile	5
Type 1 Curb Inlet	6
Special Yard Inlet	7
Manhole Detail	8
Plat	9

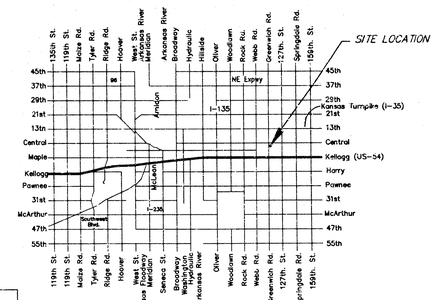

Vicinity Map

APPROVED AS NOTED
BY CITY ENGINEER OF WICHITA

Storm Sewers VRH 1/6/99

NOTE TO CONTRACTORS

Installation, inspection and testing for this project is to be provided by a Licensed Consulting Engineering Firm under contract with the Owner/Developer. Said Inspection to be in accordance with the City of Wichita standard construction engineering practices and certified by a Licensed Professional Engineer. No work shall be performed in dedicated easements or public right-of-way by the Contractor without such inspection nor shall any work be commenced without written authorization by the City Engineer. All Construction and Materials shall comply with the City of Wichita Specifications and Standards (on file and available in the City Engineer's Office).

1/6/99

BAUGHMAN COMPANY P.A.
ENGINEERING, SURVEYING, & PLANNING
316-262-7271 • 315 ELLIS • WICHITA, KAN.

DWG Tue Jan 05 16:07:23 1999

BENCHMARK:

STEP NAIL IN NORTHWEST FACE POWER POLE AT SOUTHEAST CORNER CENTRAL AVENUE AND GREENWICH ROAD.
ELEV.=191.00 CITY DATUM

STEP NAIL IN WEST FACE POWER POLE, 450' SOUTH AND 40' EAST OF THE CENTERLINES of CENTRAL AVENUE AND GREENWICH ROAD.
ELEV.=192.12 CITY DATUM

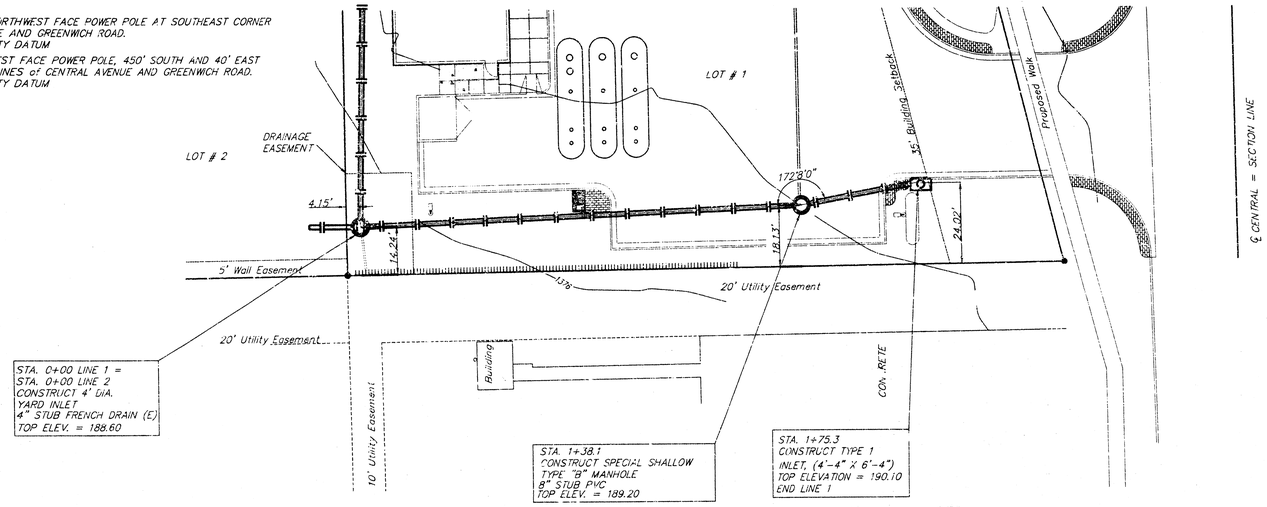

℄ CENTRAL = SECTION LINE

SCALE:
1" = 20' HORIZONTAL
1" = 5' VERTICAL
• = IRON

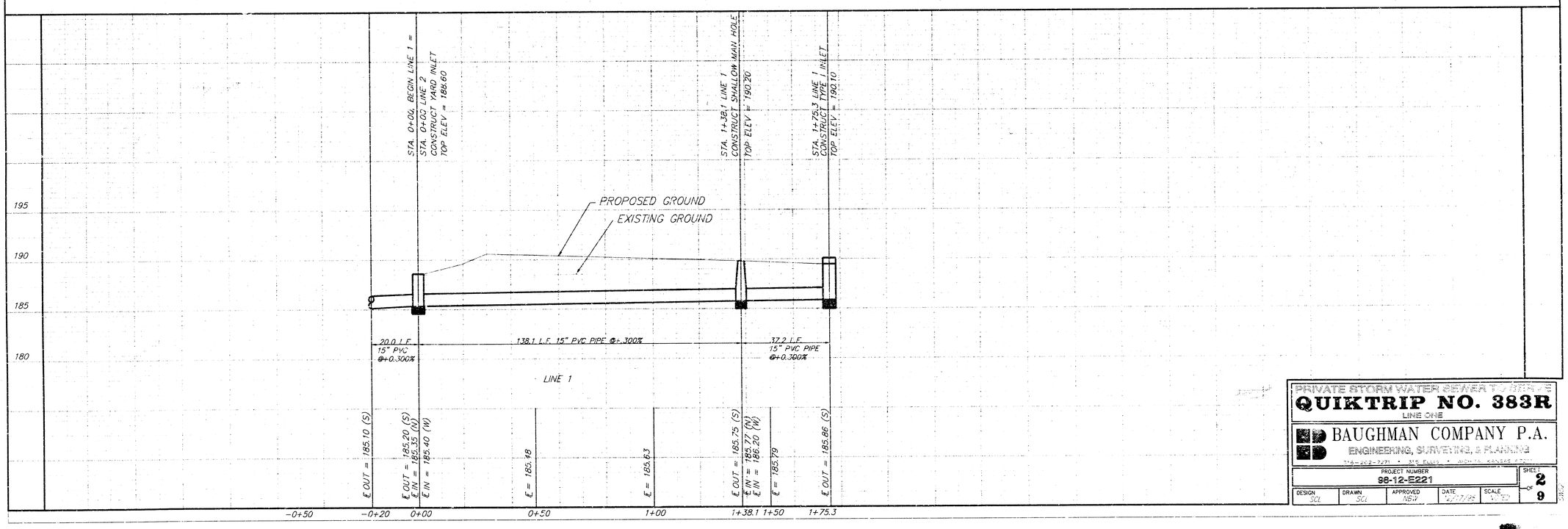

PRIVATE STORM WATER SEWER PLAN & PROFILE

QUIKTRIP NO. 383R

LINE ONE

BAUGHMAN COMPANY P.A.
ENGINEERING, SURVEYING, & PLANNING

750-252-7171 • 315 EARL • NORTH KANSAS CITY

PROJECT NUMBER	SHEET
98-12-E221	2 OF 9

DESIGN	DRAWN	APPROVED	DATE	SCALE
SCL	SCL	NSW	12/17/98	1"=20'

Tue Jan 05 16:11:29 1999

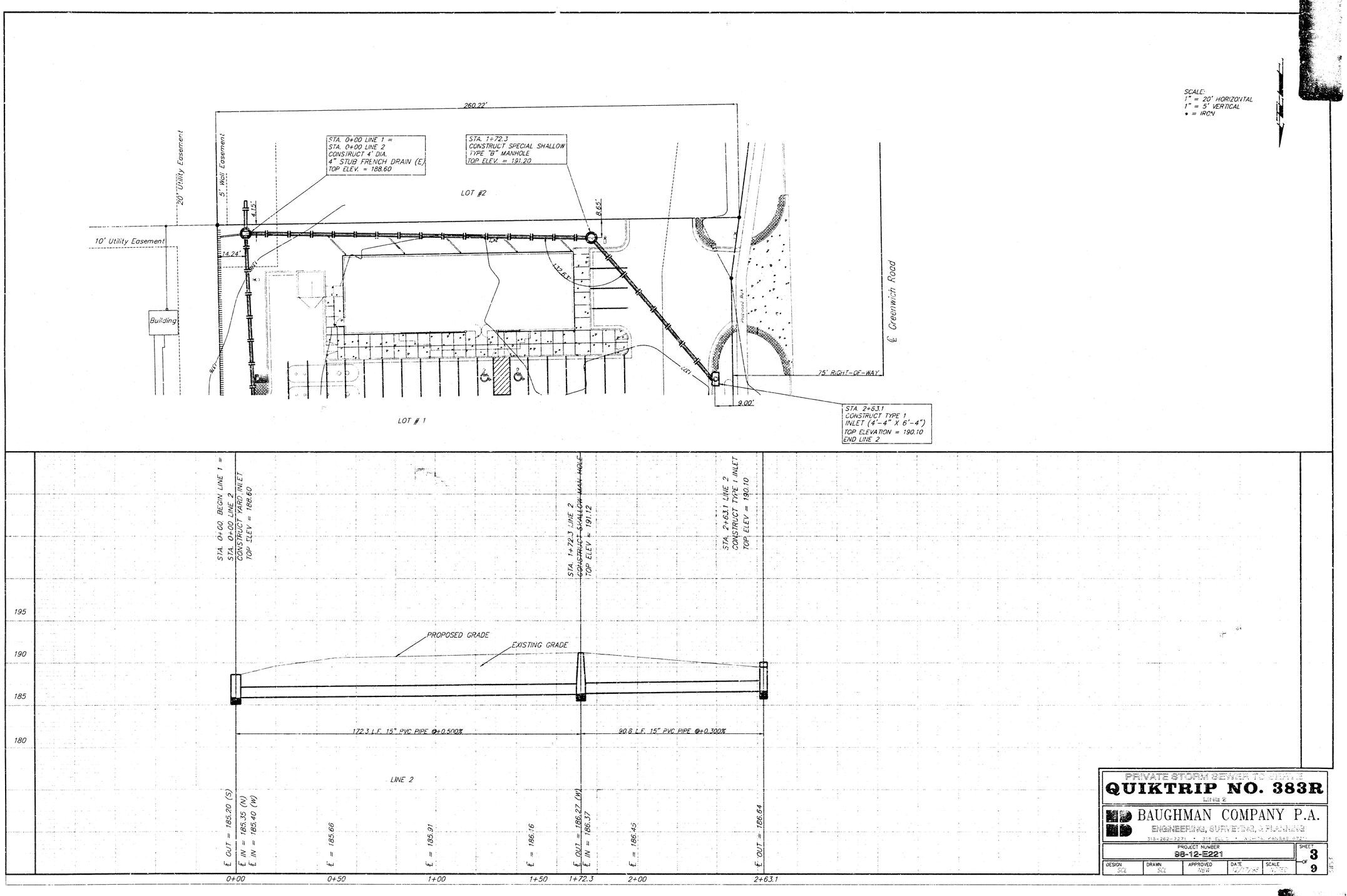

PRIVATE STORM SEWER TO SERVE

QUIKTRIP NO. 383R

LINE 2

BAUGHMAN COMPANY P.A.

ENGINEERING, SURVEYING, & PLANNING

315-262-7271 • 314 ELLIS • WICHITA, KANSAS 67211

PROJECT NUMBER					SHEET
98-12-E221					3 OF 9
DESIGN	DRAWN	APPROVED	DATE	SCALE	
SCL	SCL	NEW	12/17/98	NOTED	

DWG Tue Jan 05 16:12:04 1999

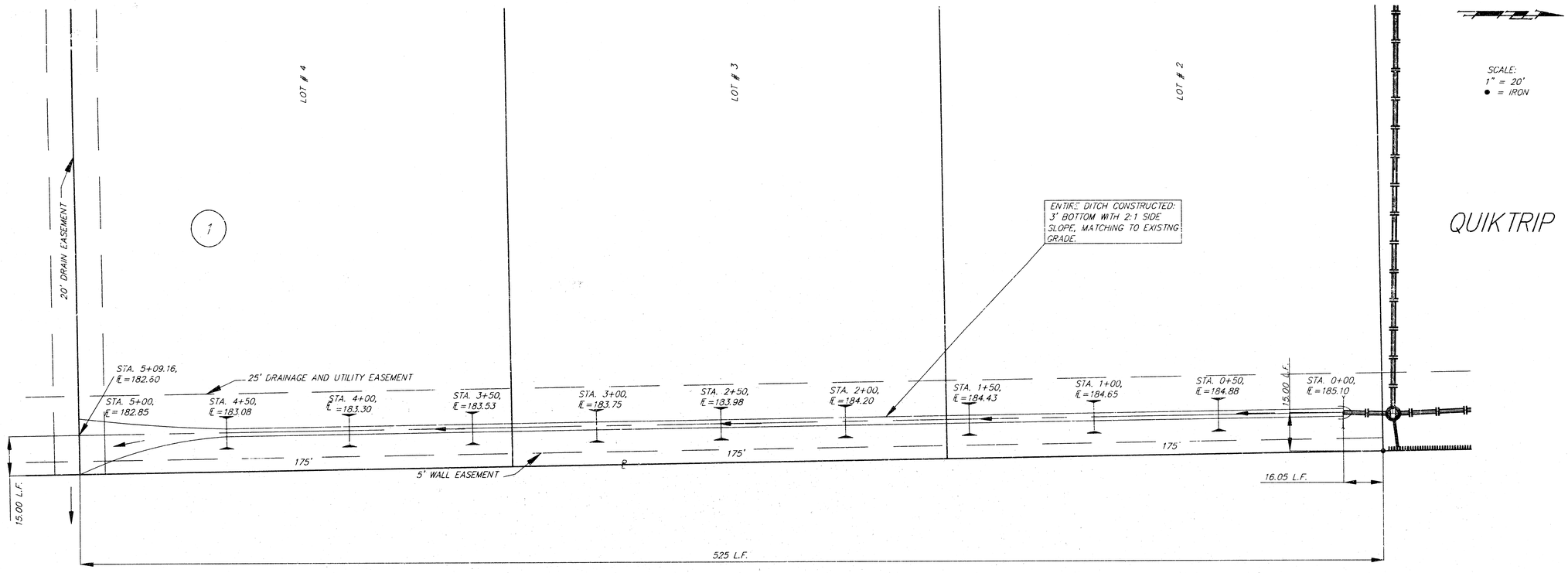

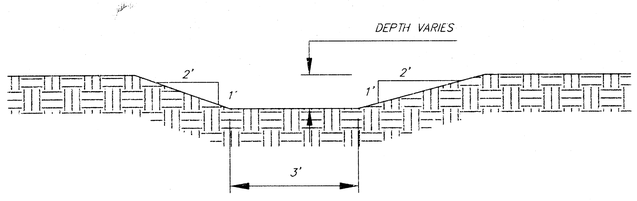

TYPICAL DITCH SECTION

(NO SCALE)

PRIVATE STORM SEWER TO BE A
QUIKTRIP NO. 383R
DITCH

BAUGHMAN COMPANY P.A.
ENGINEERING, SURVEYING, & PLANNING
316-262-7271 • 315 ELLIS • WICHITA, KANSAS 67211

PROJECT NUMBER					SHEET
98-12-E221					4 OF 9
DESIGN	DRAWN	APPROVED	DATE	SCALE	
SCL	SCL	MSW	12/22/98	AS SHOWN	

DWG Tue Jan 05 16:21:03 1999

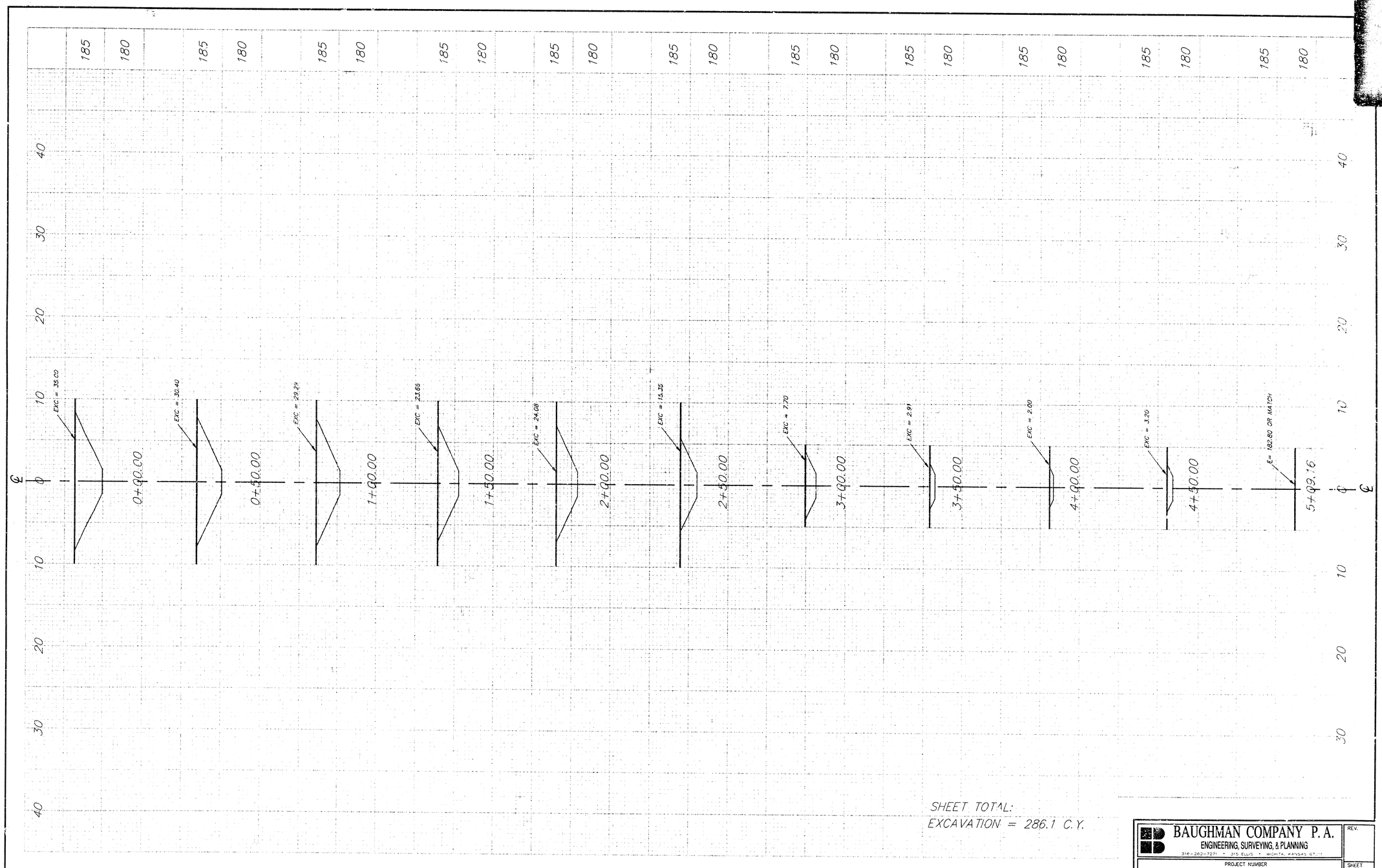

SHEET TOTAL:
EXCAVATION = 286.1 C.Y.

BAUGHMAN COMPANY P.A.
ENGINEERING, SURVEYING, & PLANNING
316-262-7271 • 315 ELLIS • WICHITA, KANSAS 67211

PROJECT NUMBER
98 - 12 - E221

REV.

SHEET
5/9

Tue Jan 05 17:00:42 1999

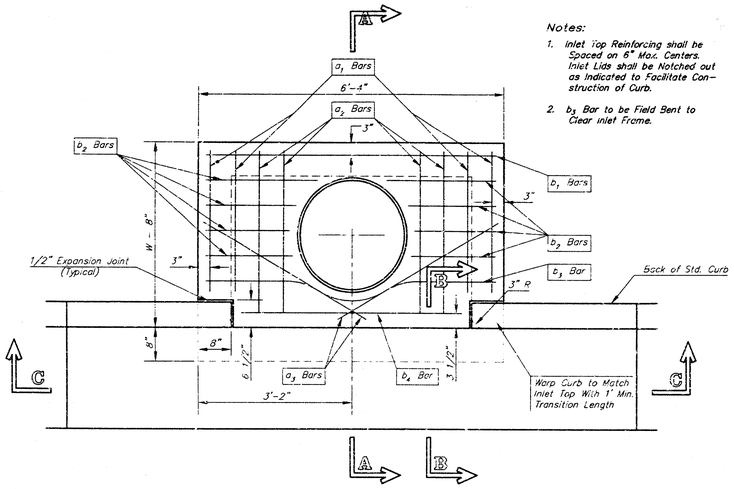

PLAN

Notes:

1. Inlet Top Reinforcing shall be Spaced on 6" Max. Centers. Inlet Lids shall be Notched out as Indicated to Facilitate Construction of Curb.
2. b_3 Bar to be Field Bent to Clear Inlet Frame.

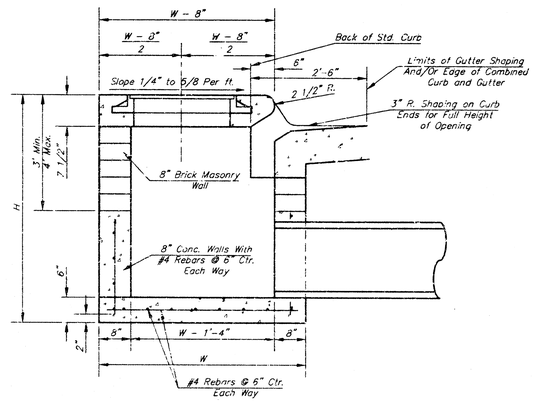

SECTION A-A

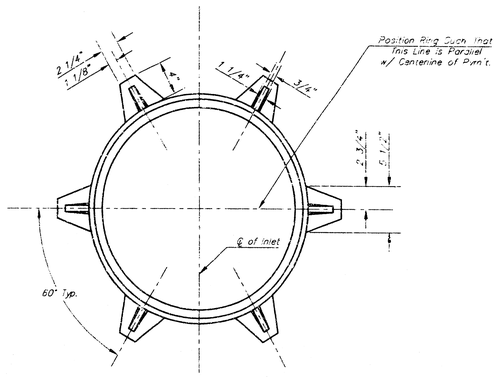

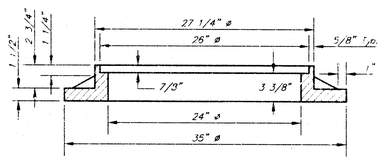

WT. = 180 lbs.

MANHOLE RING AND COVER

*See City of Wichita Standard Manhole Ring and Cover Detail Sheet for Cover Details to Be Used With Inlet Frame.

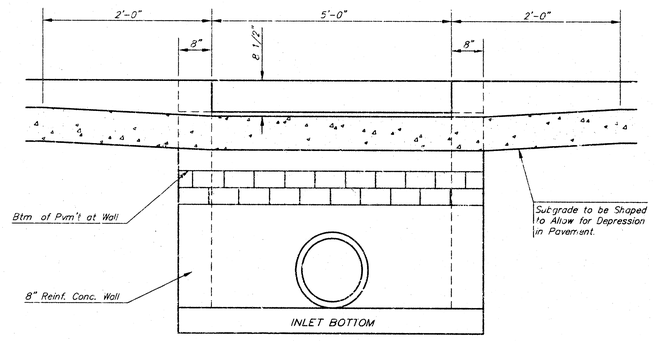

SECTION C-C

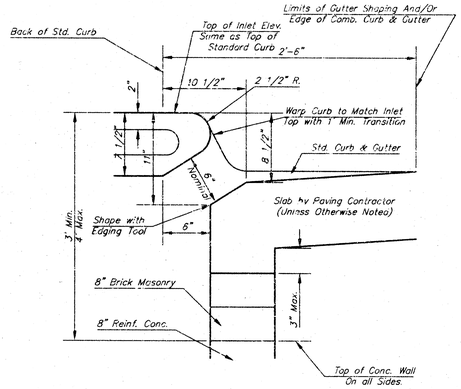

SECTION B-B

a_1 Bar = W-21"
a_2 Bar = W-15"

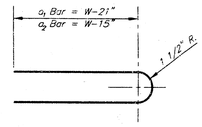

BENDING DIAGRAM

STEEL SCHEDULE

BAR		a_1	a_2	a_3	b_1 W=4'-4"	b_1 W=5'-4"	b_1 W=6'-4"	b_1 W=7'-4"	b_1 W=8'-4"	b_2	b_3	b_4	Wt. Lbs.
NUMBER		4	4	2	1	3	5	7	9	6	1	1	
SIZE		#4	#4	#4	#4	#4	#4	#4	#4	#4	#4	#6	
LENGTH	W=4'-4"	5'-7"	6'-7"	4'-0"	6'-1"	–	–	–	–	1'-9"	6'-2"	4'-8"	60±
	W=5'-4"	7'-7"	8'-7"	5'-0"	–	6'-1"	–	–	–	1'-9"	6'-2"	4'-8"	81±
	W=6'-4"	9'-7"	10'-7"	6'-0"	–	–	6'-1"	–	–	1'-9"	6'-2"	4'-8"	101±
	W=7'-4"	11'-7"	12'-7"	7'-0"	–	–	–	6'-1"	–	1'-9"	6'-2"	4'-8"	121±
	W=8'-4"	13'-7"	14'-7"	8'-0"	–	–	–	–	6'-1"	1'-9"	6'-2"	4'-8"	141±

Note: a_3 Bars to be Placed Approx. 2" Below Top of Inlet Cover.

STANDARD CURB INLET PRECAST TOPS			
W	PRE-CAST TOP SIZE	PIPE SIZE	CU. YD. CONC.
4'-4"	3'-8" 6'-4" 7 1/2"	21" & SMALLER	0.38±
5'-4"	4'-8" 6'-4" 7 1/2"	24" & 30"	0.51±
6'-4"	5'-8" 6'-4" 7 1/2"	36" & 42"	0.64±
7'-4"	6'-8" 6'-4" 7 1/2"	48" & 54"	0.77±
8'-4"	7'-8" 6'-4" 7 1/2"	60" & 66"	0.90±

GENERAL NOTES

1. Concrete tops to be installed on thin mortar cushion to insure full support along brick walls. Concrete tops may be cast in place or precast. Concrete used for inlet construction shall be concrete pavement mix.
2. Contractor shall have the option of constructing 8" brick masonry walls between the concrete inlet base and top on this inlet when W=6'-4" and H=7'-0" or less.
3. Inlet invert shall be shaped with B sack sand mix concrete to create flow channels and to increase hydraulic efficiency such that the inlet will be self cleaning between all inlet and/or outlet pipes.
4. The ends of all pipes installed in inlets shall be cut off flush with the inside face of the inlet wall.

Revised - Dec. 21, 1984

CITY OF WICHITA, KANSAS

TYPE 1 CURB INLET

INLET OPENING = 4'-4" x 2'-6"

BAUGHMAN COMPANY P.A.

ENGINEERING, SURVEYING, & PLANNING

316-262-7271 • 316 East 9th • Box 14 • Wichita, Kansas 67201

PROJECT NUMBER	SHEET
93-12-E221	6 OF 9

DESIGN	DRAWN	APPROVED	DATE	SCALE
C.I.O.W.	STAFF	MEW	2/22/85	N.S.

Tue Jan 05 16:40:16 1999

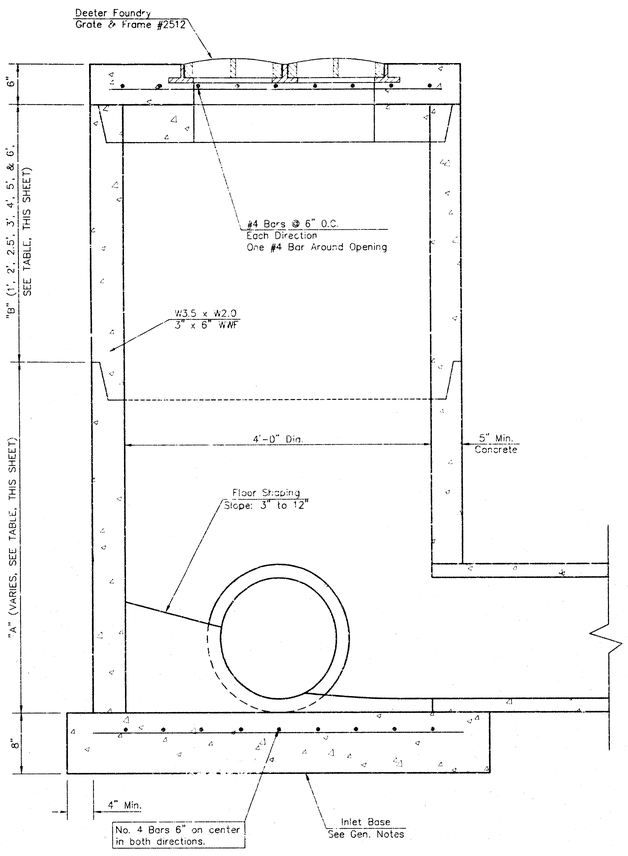

YARD INLET

LINE #	STA.	TOP OF INLET	INLET FLOW	"A"	"B"
1	0+00.00	188.60	185.20	3.0'	NONE

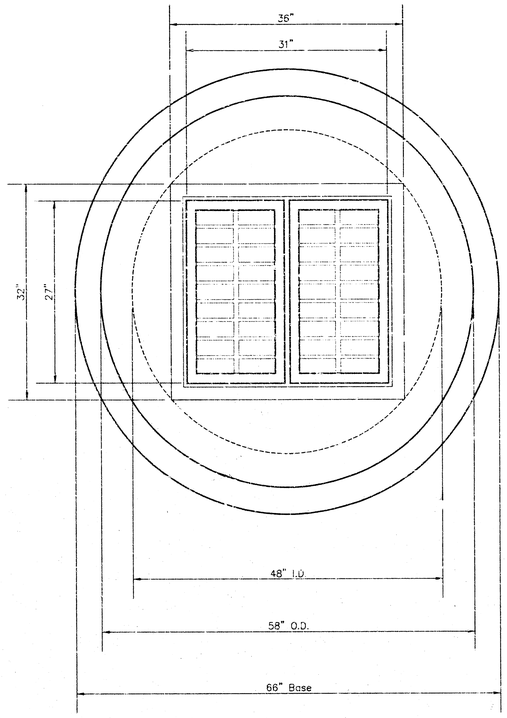

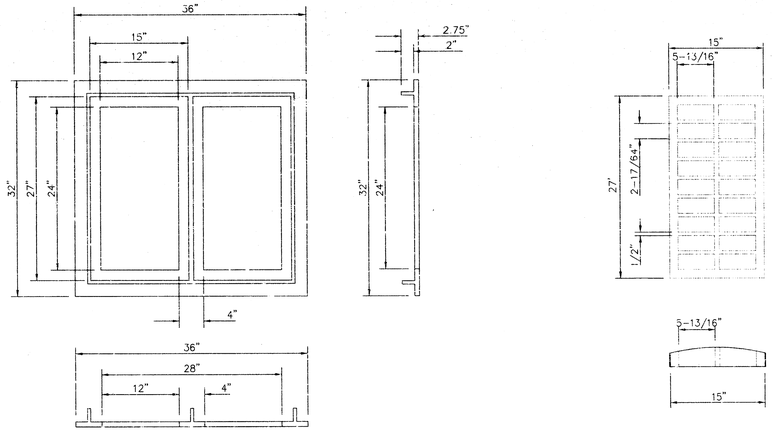

DEETER #2512 CATCH BASIN INLET GRATE & FRAME

GENERAL NOTES

1. Mortar used in masonry construction shall contain 8 sacks of cement per cubic yard. Concrete used in yard inlet bases shall conform to the requirements of concrete for concrete pavement construction as specified in the city standard paving specifications using city concrete cement mix without air entraining.

2. Reinforcing steel shall be installed in the yard inlet bases and shall consist of no. 4 bars placed on 6" centers in both directions. The yard inlet base reinforcement shall be placed 6" above the bottom of the yard inlet base. All costs for furnishing and installing reinforcing steel shall be included in the unit price bid for the yard inlet.

3. The floors of all yard inlet shall be shaped with flow channels such that the inlets will be self cleaning and free of areas where solids could be deposited. Flow channels shall be formed to match the bottom halves of the inflowing pipes and the outflowing pipe as shown by the drawings. Inlet floors shall have slopes of 3 inches per foot in the areas outside of the flow channels sloped toward the flow channels. Pipes laid through inlets shall have the top half removed to neat lines for the full inside diameter of the inlet. Inlet floors shall then be shaped around the bottom half of the pipe which forms the flow channel.

4. Pipes installed within the excavation made for the inlet shall be cradled with concrete to the limits of the inlet excavation. When clay pipe is used, the cradle shall extend to the first joint outside the inlet. The cradle shall be terminated at the clay pipe joint in a manner which will maintain the flexibility of the joint. Cost of cradle within inlet excavation or to clay pipe joints adjacent to inlet shall be included in the unit price bid for the inlet.

5. Inlet grate castings and inlet frame castings shall conform to the requirements as indicated in the standard specifications and as shown in the standard detail drawing.

6. The crowns of inflowing pipes shall never be set lower than the crown of the outflowing pipe.

7. Joints between inlet sections to be sealed with two two wraps of extruded butyl rubber joint mastic meeting City of Wichita Type "P" Manhole Specifications.

8. Special yard inlet shall be paid for at the unit price bid per each. All standard yard inlet diameters will be 4'.

SPECIAL YARD INLET

WICHITA, KANSAS

BAUGHMAN COMPANY P.A.

ENGINEERS, SURVEYORS & PLANNERS

PROJECT NUMBER	SHEET
98-12-5221	7 of 9

DESIGN	DRAWN	APPROVED	DATE	SCALE

LMG Tue Jan 05 16:40:40 1999

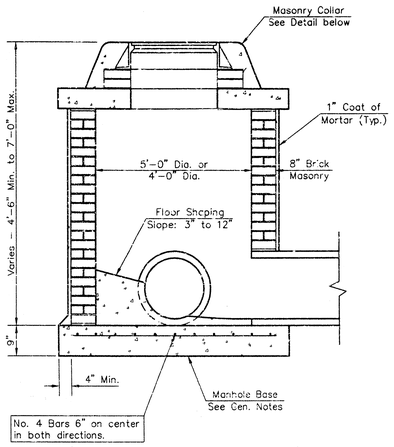

SHALLOW TYPE "A" MANHOLE

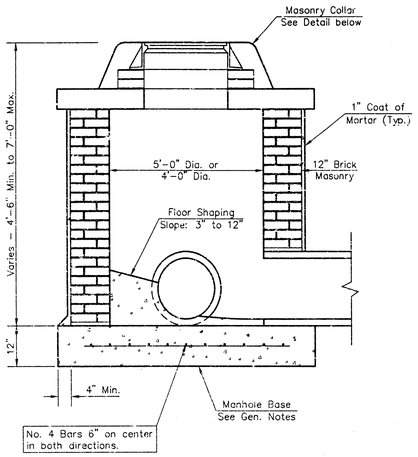

SHALLOW TYPE "B" MANHOLE

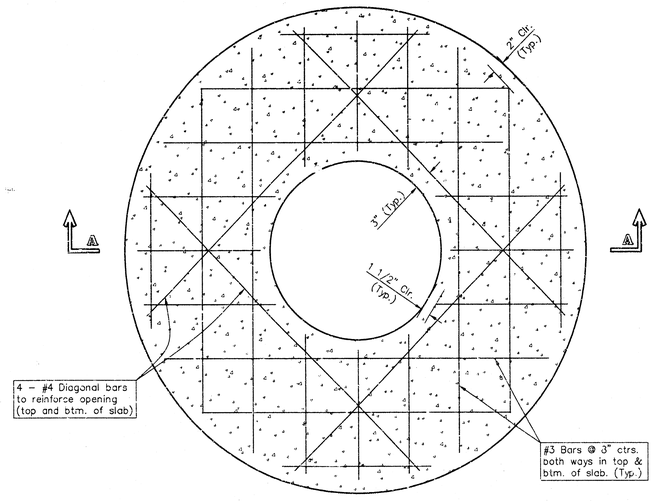

PLAN

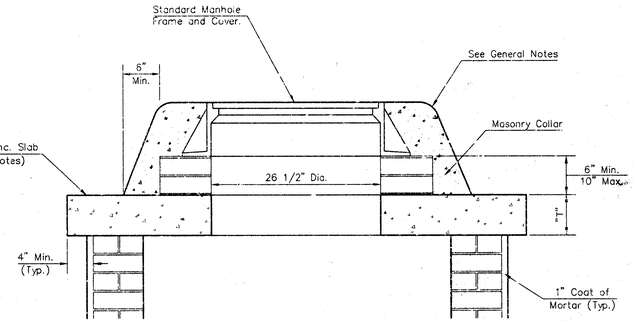

MASONRY COLLAR DETAIL

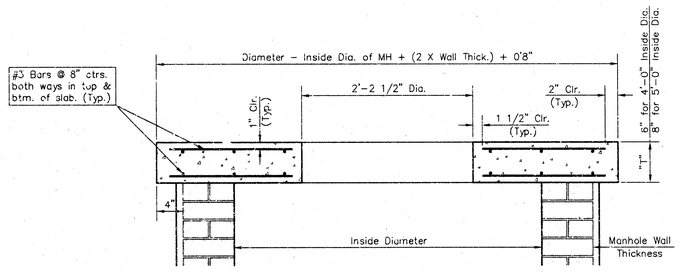

SECTION A-A

FLAT CONCRETE SLAB DETAILS

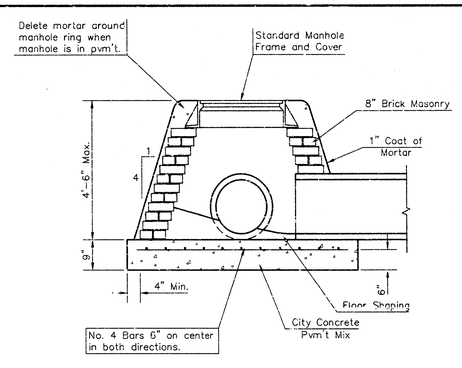

SPECIAL SHALLOW TYPE "A" MANHOLE

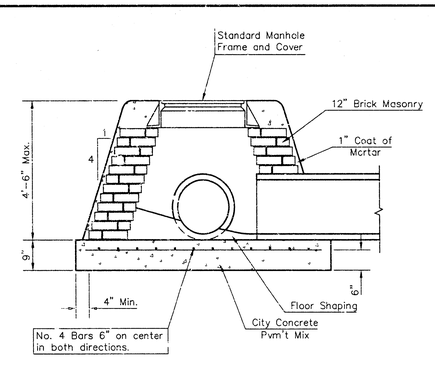

SPECIAL SHALLOW TYPE "B" MANHOLE

GENERAL NOTES

1. Mortar used in masonry construction shall contain 8 sacks of cement per cubic yard. Concrete used in manhole bases shall conform to the requirements of concrete for concrete pavement construction as specified in the city standard paving specifications using city concrete cement mix without air entraining admixture. Mortar shall be placed around the manhole ring as shown on the drawings when manholes are constructed in unpaved areas. Type "A" shallow manholes can be used on sewers when the manhole is not located within public street pavement. Manholes constructed where pipe sizes are smaller than 24" shall have an inside diameter of 4'. Manholes constructed where pipe sizes are 24" or larger shall have an inside diameter of 5'. Completed manhole shall be without leaks and water tight.

2. Reinforcing steel shall be installed in the manhole bases and shall consist of no. 4 bars placed on 6" centers in both directions. The manhole base reinforcement shall be placed 6" above the bottom of the manhole base. All costs for furnishing and installing reinforcing steel shall be included in the unit price bid for the manhole.

3. The floors of all manholes shall be shaped with flow channels such that the manholes will be self cleaning and free of areas where solids could be deposited as sewage flows through the manhole from all inlet pipes to the outlet pipe. Flow channels shall be formed to match the bottom halves of the inflowing pipes and the outflowing pipe as shown by the drawings. Manhole floors shall have slopes of 3 inches per foot in the areas outside of the flow channels sloped toward the flow channels. Pipes laid through manholes shall have the top half removed to neat lines for the full inside diameter of the manhole. Manhole floors shall then be shaped around the bottom half of the pipe which forms the flow channel.

4. Pipes installed within the excavation made for the manhole shall be cradled with concrete to the limits of the manhole excavation. When clay pipe is used, the cradle shall extend to the first joint outside the manhole. The cradle shall be terminated at the clay pipe joint in a manner which will maintain the flexibility of the joint. Cost of cradle within manhole excavation or to clay pipe joints adjacent to manhole shall be included in the unit price bid for the manhole.

5. Manhole cover castings and manhole frame castings shall conform to the requirements as indicated in the standard specifications and as shown in the standard detail drawings.

6. The crowns of inflowing pipes shall never be set lower than the crown of the outflowing pipe.

7. Standard shallow manholes type "A" and "B" shall be paid for at the unit price bid per each for the type and diameter indicated. Standard special shallow manholes type "A" and "B" shall be paid for at the unit price bid per each for the type indicated. All standard shallow manhole diameters will be 4' unless indicated otherwise.

8. All brick used in manhole construction shall meet Grade SW of ASTM C652 or C62-87.

CITY OF WICHITA

MANHOLE DETAIL

TYPE "A" AND TYPE "B"

BAUGHMAN COMPANY P.A.
ENGINEERING, SURVEYING, & PLANNING
316-262-7271 • 315 EARL • WICHITA, KANSAS 67211

PROJECT NUMBER	SHEET	OF
98-12-E221	8	9

DESIGN	DRAWN	APPROVED	DATE	SCALE
SCL	STAFF	NFW	12/22/98	

Tue Jan 05 16:36:03 1999

8-16 Pd

CANYON PROPERTIES ADDITION

TO WICHITA, SEDGWICK COUNTY, KANSAS

SCALE: 1"=50'

BM GG112 – STEP NAIL IN NORTHWEST FACE POWER POLE AT SOUTHEAST CORNER CENTRAL AVENUE AND GREENWICH ROAD.
ELEV.=1378.40 M.S.L.

BM GG113 – STEP NAIL IN WEST FACE POWER POLE, 450' SOUTH AND 40' EAST OF THE CENTERLINES OF CENTRAL AVENUE AND GREENWICH ROAD.
ELEV.=1379.52 M.S.L.

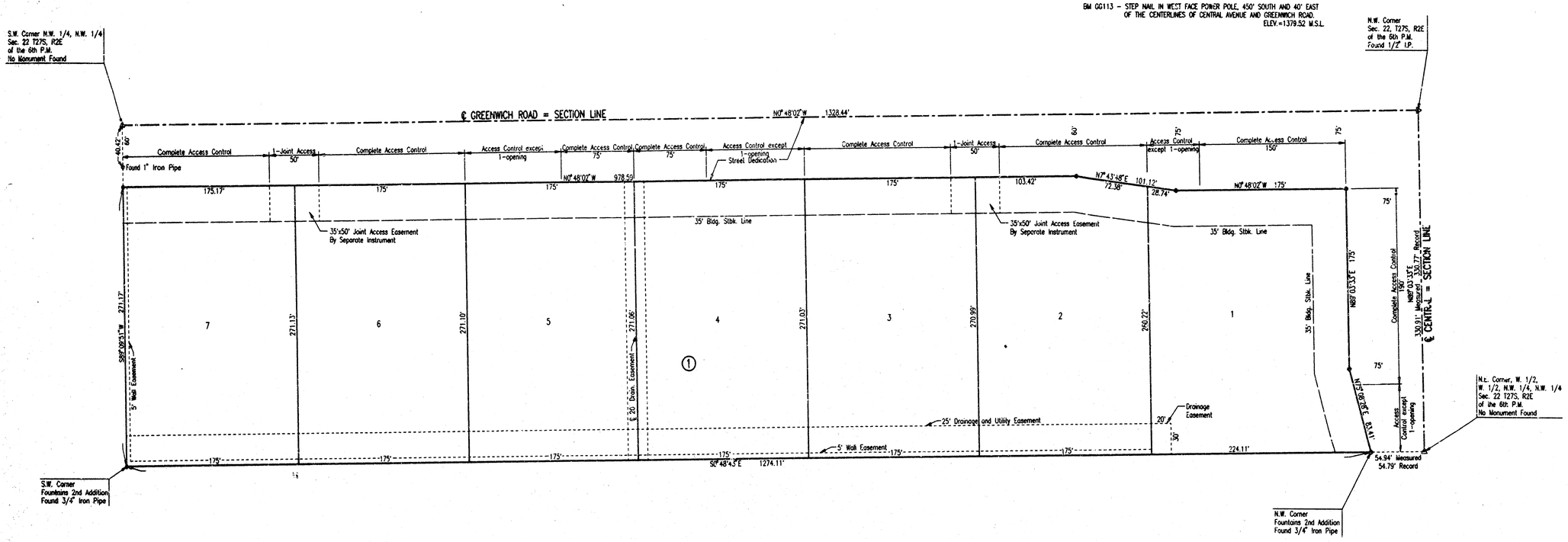

STATE OF KANSAS } SS
COUNTY OF SEDGWICK }

I, JAMES P. MOORE, A REGISTERED LAND SURVEYOR IN AFORESAID STATE AND COUNTY, DO HEREBY CERTIFY THAT ON THIS 21st DAY OF July, 1998, I HAVE CAUSED TO BE SURVEYED AND PLATTED CANYON PROPERTIES ADDITION TO WICHITA, SEDGWICK COUNTY, KANSAS, INTO LOTS, A BLOCK, AND STREETS THE SAME BEING DESCRIBED AS:

ALL OF THE WEST HALF OF THE WEST HALF OF THE NORTHWEST QUARTER OF THE NORTHWEST QUARTER OF SECTION 22, TOWNSHIP 27 SOUTH, RANGE 2 EAST OF THE SIXTH PRINCIPAL MERIDIAN, SEDGWICK COUNTY, KANSAS.

RIGHT-OF-WAY ROAD EASEMENTS AS PER FILM 1722, PAGES 1379 AND 1381, AND MISC. BOOK 301, PAGE 437, AND MISC BOOK 606, PAGE 11, ARE HEREBY VACATED AND REPLATTED BY VIRTUE OF K.S.A. 12-512(b) AMENDED.

James P. Moore
JAMES P. MOORE, R.L.S. NO. 829
PROFESSIONAL ENGINEERING CONSULTANTS, P.A.

JAMES P. MOORE LS-829 7-21-98 LICENSED LAND SURVEYOR

KNOW ALL MEN BY THESE PRESENTS THAT WE, THE UNDERSIGNED PROPERTY OWNERS OF THE LAND AS ABOVE SET FORTH IN THE SURVEYOR'S CERTIFICATE, HAVE CAUSED THE LAND TO BE SURVEYED AND PLATTED INTO LOTS, A BLOCK, AND STREETS THE SAME TO BE KNOWN AS CANYON PROPERTIES ADDITION TO WICHITA, SEDGWICK COUNTY, KANSAS. EASEMENTS FOR THE CONSTRUCTION AND MAINTENANCE OF PUBLIC UTILITIES AND DRAINAGE ARE HEREBY GRANTED.

THE STREETS ARE HEREBY DEDICATED TO AND FOR THE USE OF THE PUBLIC

THE 5-FOOT WALL EASEMENT ALONG THE EAST LINE OF LOTS 2 THROUGH 7, AND THE SOUTH LINE OF LOT 7, BLOCK 1, IS HEREBY PLATTED FOR THE CONSTRUCTION AND MAINTENANCE OF A PRIVATE WALL. UTILITIES MAY CROSS THE WALL EASEMENT

ALL ABUTTERS' RIGHT OF ACCESS TO AND FROM GREENWICH ROAD AND CENTRAL AVENUE OVER AND ACROSS THE NORTH AND WEST LINES OF BLOCK 1, ARE HEREBY GRANTED TO THE CITY OF WICHITA, PROVIDED HOWEVER THAT LOT 1, BLOCK 1 SHALL HAVE ACCESS TO CENTRAL AVENUE AT (1) ONE LOCATION AND TO GREENWICH ROAD AT (1) ONE LOCATION; THAT LOTS 2, 3, 6 AND 7 SHALL HAVE A JOINT ACCESS OPENING TO GREENWICH ROAD, AS SHOWN, AND THAT LOTS 4 AND 5 SHALL HAVE ACCESS TO GREENWICH ROAD AT (1) ONE LOCATION EACH; SAID LOCATIONS TO BE DETERMINED BY THE CITY ENGINEER OF THE CITY OF WICHITA, KANSAS.

FOR ADDITIONAL INFORMATION AND SETBACK LINES, SEE C.U.P. DP-229 ON FILE AT THE WICHITA-SEDGWICK COUNTY METROPOLITAN AREA PLANNING DEPARTMENT, WICHITA, KANSAS.

OWNER: CANYON PROPERTIES, INC.

BY Jerry D. Jones
JERRY D. JONES, PRESIDENT

STATE OF KANSAS } SS
COUNTY OF SEDGWICK }

BE IT REMEMBERED ON THIS 24th DAY OF July, 1998, BEFORE ME A NOTARY PUBLIC IN AFORESAID STATE AND COUNTY CAME JERRY D. JONES, VICE-PRESIDENT OF CANYON PROPERTIES, INC., AND TO ME PERSONALLY KNOWN TO BE THE SAME PERSON WHO EXECUTED THE FOREGOING INSTRUMENT OF WRITING AND DULY ACKNOWLEDGED THE EXECUTION OF SAME FOR AND ON BEHALF OF AND AS THE ACT AND DEED OF SAID COMPANY IN TESTIMONY WHEREOF I HAVE HEREUNTO SET MY HAND AND AFFIXED MY NOTARIAL SEAL THE DAY AND YEAR ABOVE WRITTEN.

Gary L. Wiley
GARY L. WILEY, NOTARY PUBLIC

MY COMMISSION EXPIRES 1-15-2001

GARY L. WILEY NOTARY PUBLIC STATE OF KANSAS My Appt. Exp. 1-15-2001

WE, INTRUST BANK N.A., IN WICHITA, KANSAS, HOLDER OF A MORTGAGE ON THE ABOVE DESCRIBED PROPERTY, DO HEREBY CONSENT TO THE PLATTING OF CANYON PROPERTIES ADDITION TO WICHITA, SEDGWICK COUNTY, KANSAS.

BY: Roger G. Eastwood
ROGER G. EASTWOOD, SENIOR VICE PRESIDENT

STATE OF KANSAS } SS
COUNTY OF SEDGWICK }

BE IT REMEMBERED ON THIS 24th DAY OF July, 1998, BEFORE ME A NOTARY PUBLIC IN AFORESAID STATE AND COUNTY CAME ROGER G. EASTWOOD, SENIOR VICE-PRESIDENT, INTRUST BANK, N.A., AND TO ME PERSONALLY KNOWN TO BE THE SAME PERSON WHO EXECUTED THE FOREGOING INSTRUMENT OF WRITING AND DULY ACKNOWLEDGED THE EXECUTION OF SAME FOR AND ON BEHALF OF AND AS THE ACT AND DEED OF SAID BANK IN TESTIMONY WHEREOF I HAVE HEREUNTO SET MY HAND AND AFFIXED MY NOTARIAL SEAL THE DAY AND YEAR ABOVE WRITTEN.

Gary L. Wiley
GARY L. WILEY, NOTARY PUBLIC

MY COMMISSION EXPIRES 1-15-2001

GARY L. WILEY NOTARY PUBLIC STATE OF KANSAS My Appt. Exp. 1-15-2001

THIS PLAT HAS BEEN SUBMITTED TO AND APPROVED BY THE WICHITA-SEDGWICK COUNTY METROPOLITAN AREA PLANNING COMMISSION, WICHITA, KANSAS. DATED THIS 25th DAY OF June, 1998.

Richard E. Lopez
RICHARD LOPEZ, CHAIRMAN

Marvin S. Krout
MARVIN S. KROUT, SECRETARY

WICHITA-SEDGWICK COUNTY METROPOLITAN PLANNING COMMISSION SEAL KANSAS

THIS PLAT APPROVED AND ALL DEDICATIONS SHOWN HEREON ARE ACCEPTED BY THE CITY COUNCIL OF THE CITY OF WICHITA, KANSAS. DATED THIS 25 th DAY OF AUGUST, 1998.

Bob Knight
BOB KNIGHT, MAYOR

Pat Burnett
PAT BURNETT, CITY CLERK

ENTERED ON TRANSFER RECORD THIS 3rd DAY OF September, 1998.

James Alford
JAMES ALFORD, COUNTY CLERK

THIS IS TO CERTIFY THAT THIS INSTRUMENT WAS FILED FOR RECORD IN THE REGISTER OF DEEDS OFFICE AT 9:19 A.M., ON THIS 4th DAY OF September, 1998.

BILL MEEK, REGISTER OF DEEDS

Linda Kizzire
LINDA KIZZIRE, DEPUTY

1722853

20.00

DSN#: SANCHEZ, OPER: DEP SCALE: 1=50.00
Q:\1998\1980\2\FINAL 07-08-1998 10:04:26 am

60 10 60 Pl

PC 91 8