6mp-1-SWS 09/07/1999 10:59:49

STORM WATER SEWER TO SERVE

LANCASTER ADDITION
LOTS 1 & 2

Private Project Number

901 PPS (607861)

CITY OF WICHITA, KANSAS

Michael E. Lindebak, P.E. City Engineer

June 1999

Index

Cover/Plan/Profile Sheet	1
Detail Sheet	2
Copy Of Plat	3

LEGAL DESCRIPTION:

Lots 1 and 2 Lancaster Addition, Wichita, Kansas.

SITE BENCHMARK:

Chiseled V-Notch at the Northwest corner of Lot 1, Lancaster Addition.
Elevation = 154.27 City Datum (MSL = 1341.67)

Location Map

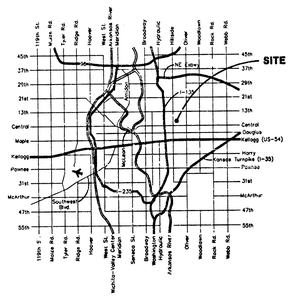

General Notes

1. Contractor will be required to provide notice to utility companies a minimum of forty-eight (48) hours prior to any excavation, as follows:

   Kansas One-Call 687-2470

   The Contractor must notify the following in case of an emergency:

MultiMedia Cablevision	262-4270
Kansas Gas Service Company	383-8650
Kansas Gas & Electric Company	383-8600
Peoples Gas Company	942-7600
Southwestern Bell Telephone Company	1-571-2611
City of Wichita Water Department	268-4908
City of Wichita Sewer Department	268-4071

2. Underground utility service lines and overhead utility pole lines are to be adjusted as necessary by others prior to construction unless the plans specifically call for their adjustment by the Contractor or unless the plans specifically identify a utility to be adjusted by its owner during construction. Existing utilities and their location, as shown on the plans, represent the best information obtainable for design. Location information has been obtained from the various utility companies and is either from company record drawings or company provided field locations. The Contractor will be required to work around existing utilities within the right-of-way which do not conflict with proposed construction.

3. The Contractor shall be responsible for preserving property irons. The Contractor will be required to re-establish any property irons which are damaged or destroyed by his construction operations. Such irons shall be re-established by a licensed land surveyor in accordance with state law.

4. Contractor shall not start work on the project until the project inspector is assigned to the project and is present on the site. Any work done without inspection will be required to be uncovered for inspection.

5. Rubble from the removal of miscellaneous structures and excess excavation which is to be wasted shall be disposed of on sites to be provided by the Contractor. These sites shall be approved by the Engineer as to suitability, appearance and site location. Locations that, in the opinion of the Engineer, will leave an unsightly appearance will not be approved. All disposal sites must be approved by the Kansas Department of Health and Environment. Material either stockpiled or disposed of in a flood plain would require a Kansas State Board of Agriculture permit. Any material dumped in waters of the United States or wetlands is subject to U.S. Corps. of Engineers permitting regulations. Any material buried or stockpiled beyond approved construction limits would require additional archaeological investigations unless buried in a previously approved borrow location.

6. All areas disturbed by construction operations shall be seeded with rye grass at a rate of 6 lbs. per 1000 sq. feet or as per city specs. Contractor to prepare ground to city specifications.

7. Cuts made to paved surfaces on public property will be repaired by the City's contractor and charged against the owner/applicant. Unit repair prices are available from the City at 268-4418. A surcharge may be applicable: call 268-4418 for details. Repair costs to be paid prior to release of water service if water service is affected.

APPROVED AS NOTED
BY CITY ENGINEER OF WICHITA

Storm Sewers VRH 6/1/99

NOTE TO CONTRACTORS

Installation, inspection and testing for this project is to be provided by a Licensed Consulting Engineering Firm under contract with the Owner/Developer. Said inspection to be in accordance with the City of Wichita standard construction engineering practices and certified by a Licensed Professional Engineer. No work shall be performed in dedicated easements or public right-of-way by the Contractor without such inspection nor shall any work be commenced without written authorization by the City Engineer. All Construction and Materials shall comply with the City of Wichita Specifications and Standards (on file and available in the City Engineer's Office).

DAVID L. YARBROUGH LICENSED 14709 6/1/99 KANSAS PROFESSIONAL ENGINEER

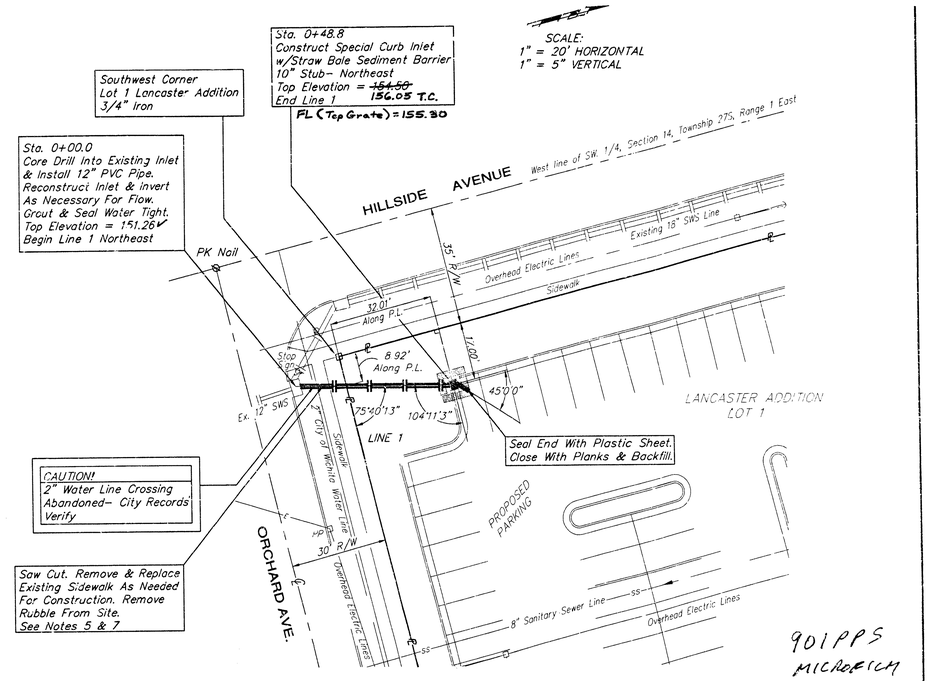

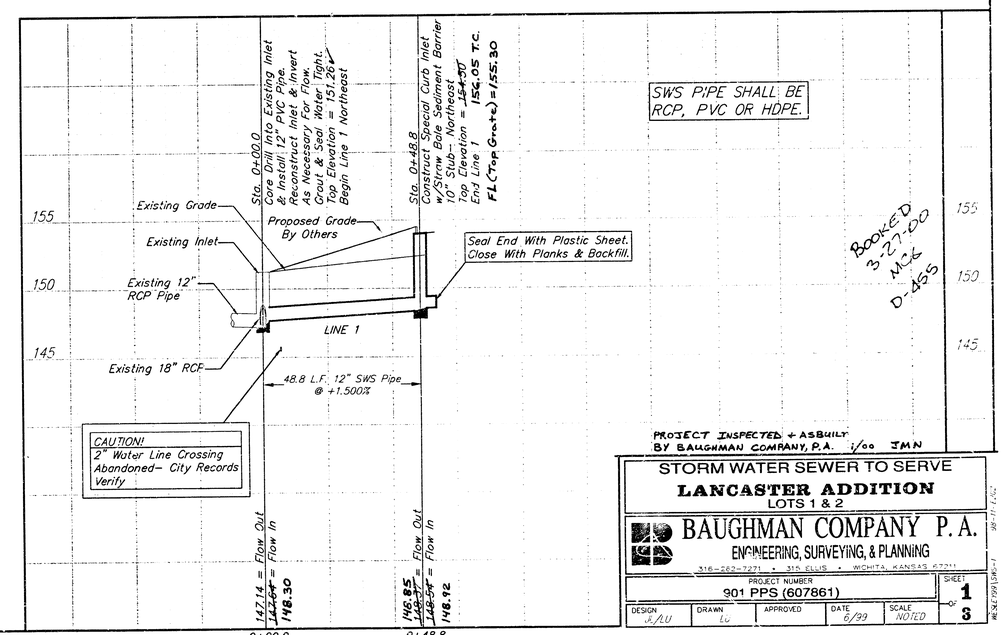

STORM WATER SEWER TO SERVE
LANCASTER ADDITION
LOTS 1 & 2

BAUGHMAN COMPANY P.A.
ENGINEERING, SURVEYING, & PLANNING
316-262-7271 • 315 ELLIS • WICHITA, KANSAS 67211

PROJECT NUMBER					SHEET
901 PPS (607861)					1 of 3
DESIGN	DRAWN	APPROVED	DATE	SCALE	
J.J.U	LC		6/99	NOTED	

98-11-1.CDC
REVISED 1999 SWS-1

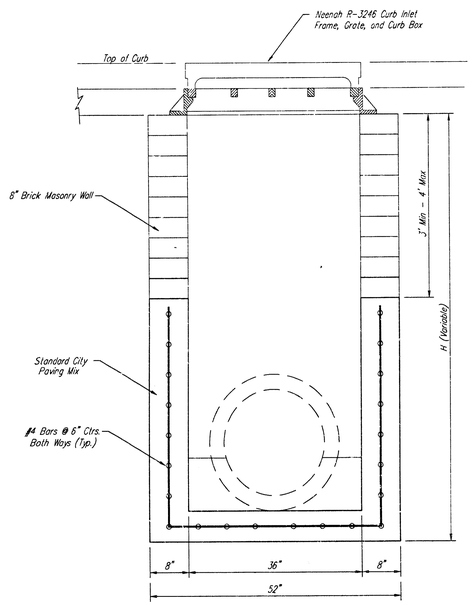

FRONT VIEW

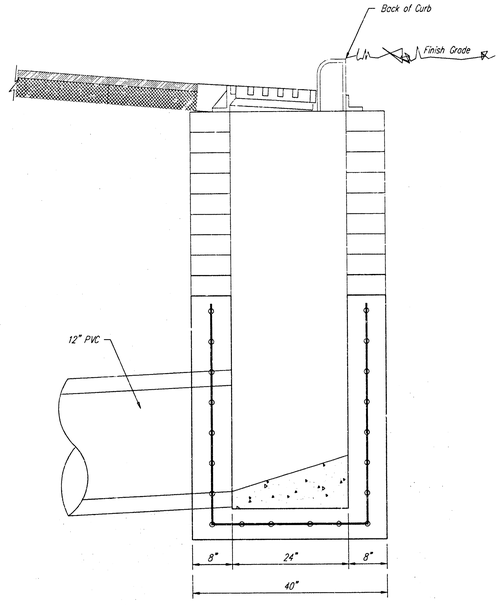

SIDE VIEW

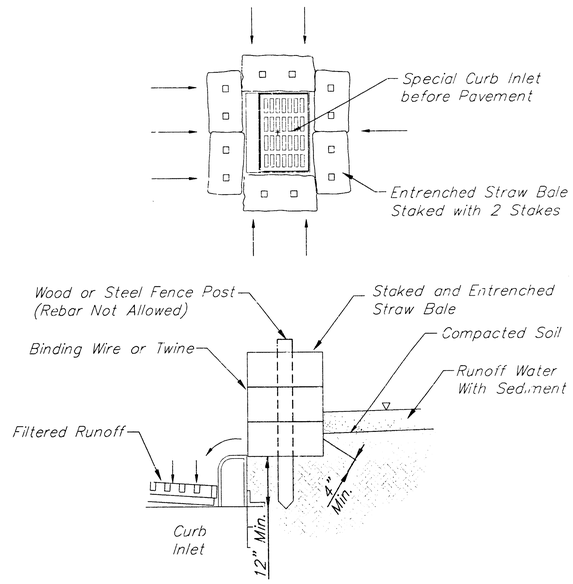

TYP. STRAW BALE BARRIER DETAIL

Note: Straw Bale Barriers to be Paid per Each as Inlet Sediment Barriers.

GENERAL NOTES:

Contractor shall have the option of constructing 8" brick masonry walls between the concrete inlet base and frame on this inlet when the height (H) is 7 feet or less.

The inlet invert shall be shaped with 8 sack sand mix concrete to create flow channels and to increase the hydraulic efficiency such that the inlet shall be self cleaning between all inlet and/or outlet pipes.

The end of all pipes installed in this inlet shall be cut off flush with the inside face of the inlet wall.

DETAIL
SPECIAL CURB INLET

BAUGHMAN COMPANY P.A.
ENGINEERING, SURVEYING, & PLANNING
316-262-7271 • 315 ELLIS • WICHITA, KANSAS 67211

PROJECT NUMBER					SHEET
901 PPS (607861)					2 OF 3
DESIGN JL/LU	DRAWN LU	APPROVED	DATE 6/99	SCALE NONE	

WESLEY\CBINLET

C-1 5-30

LANCASTER ADDITION

WICHITA, KANSAS

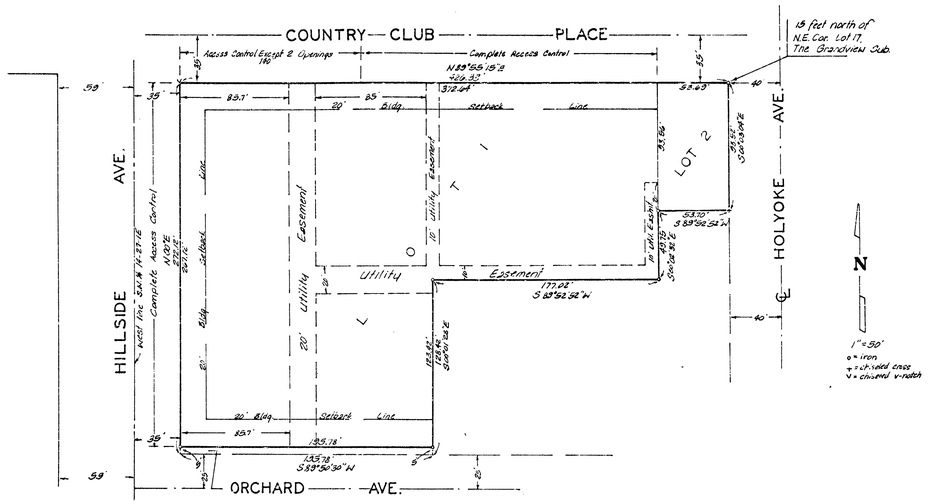

State of Kansas } ss.
Sedgwick County }

We, Baughman Company, P.A., Surveyors in aforesaid county and state do hereby certify that we have surveyed and platted "LANCASTER ADDITION," Wichita, Kansas and that the accompanying plat is a true and correct exhibit of the property surveyed, described as and being a replat of Lots 1, 2, 3, 4, 5, 6, 7, 8, 9 and 10 on Hillside, except the west 35 feet thereof, and Lots 21, 22, 23 and 24 on Country Club Place, and Lots 25, 26, 27, and 28 on Orchard, all in Myers Subdivision of Lots 1 and 3 in Block 6, of Frisco Heights Addition to Wichita, Sedgwick County, Kansas, together with all of the Alley lying between said Lots, and together with the south 15 feet of Country Club Place adjacent thereto on the north, and all of Lots 1, 3, 5, 7, 9, 11, and 13, and Lot 15 except the south 44.75 feet of the east 23 feet thereof, and Lot 17 except the south 44.75 feet thereof, all on Country Club Place, in The Grandview Subdivision of Lots 2 and 4 in Block 6 of Frisco Heights Addition to Wichita, Sedgwick County, Kansas, together with the south 15 feet of Country Club Place adjacent thereto on the north, and together with the N½ of the Alley adjacent thereto on the south. Said street and alley right-of-ways being vacated by virtue of K.S.A. 12-512(b). Being situated in the S.W.¼ of Sec. 14, Twp. 27-S, R-1-E of the 6th P.M., Sedgwick County, Kansas.

10/10/84 Baughman Company, P.A.
Date William L. Korber Surveyor

This plat of "LANCASTER ADDITION," Wichita, Kansas has been submitted to and approved by the Wichita-Sedgwick County Metropolitan Area Planning Commission, Wichita, Kansas.
Dated this 1st day of December 1984.

Wichita-Sedgwick County Metropolitan Area Planning Commission

James C. Wilson Chairman
Jack H. Goldsmith Asst Secretary

This plat approved and all dedications shown hereon accepted by the Board of Commissioners of the City of Wichita, Kansas, this ___ day of ___ 198__.

Tony Cosado Mayor
Donald C. Gleick City Clerk

Entered on transfer record this ___ day of ___ 198__.

Don Wright County Clerk

State of Kansas } ss.
Sedgwick County }

This is to certify that this plat has been filed for record in the office of the Register of Deeds, this ___ day of ___ 198__, at ___ o'clock ___ M; and is duly recorded.

Pat Kettler Register of Deeds
Ed Kesa Deputy

We, the undersigned, holders of a mortgage on a portion of the above described property do hereby consent to this plat of "LANCASTER ADDITION," Wichita, Kansas.

Federal National Mortgage Association

Frank L. Scrirano

State of ___ } ss.
County of ___ }

The foregoing instrument was acknowledged before me this ___ day of ___ 198__, by Frank L. Scrirano, Assistant Vice President of Federal National Mortgage Association.

My App. Exp. ___ M.L. Youngblood Notary Public

We, the undersigned, holders of a mortgage on a portion of the above described property do hereby consent to this plat of "LANCASTER ADDITION," Wichita, Kansas.

Mid Kansas Federal Savings and Loan Association of Wichita

Kenneth P. Brasted II

State of Kansas } ss.
Sedgwick County }

The foregoing instrument was acknowledged before me this ___ day of ___ 198__, by ___ of Mid Kansas Federal Savings and Loan Association of Wichita.

My App. Exp. ___ Dorothy Meincke Notary Public

We, the undersigned, holders of a mortgage on a portion of the above described property do hereby consent to this plat of "LANCASTER ADDITION," Wichita, Kansas.

Central Bank and Trust

State of Kansas } ss.
Sedgwick County }

The foregoing instrument was acknowledged before me this ___ day of ___ 198__, by ___, ___ of Central Bank and Trust.

___ Notary Public

Know all men by these presents that we, the undersigned, have caused the land described in the surveyors certificate to be platted into lots and a street to be known as "LANCASTER ADDITION," Wichita, Kansas. The street is hereby dedicated to and for the use of the public. The utility easements are hereby granted as indicated for the construction and maintenance of all public utilities. All abutters rights of access to or from Hillside Ave. over and across the west line of Lot 1, and to or from Country Club Place over and across the north line of Lot 1 are hereby granted to the City of Wichita, provided however, that Lot 1 shall have access to Country Club Place at 2 points over the west 140 feet thereof, as shall be determined by the City Engineer of the City of Wichita, Kansas.

Lancaster Properties Ltd, a limited partnership

By: Lancaster Ventures Inc., General Partner

Joe W. Carmichael President

State of Kansas } ss.
Sedgwick County }

The foregoing instrument was acknowledged before me this ___ day of ___ 198__, by Joe W. Carmichael, President of Lancaster Ventures Inc., General Partner of Lancaster Properties Ltd., a limited partnership.

My App. Exp. ___ Susan Randt Notary Public

03 02 90 18