PRIVATE STORM SEWER
TO SERVE LOTS 18-22, BLOCK 8
MARTINSON'S 7TH ADDITION AND LOTS 19-23,
BLOCK 5, JUNCTION TOWN CO. ADDITION

PROJECT NO: 905PPS
INDEX CODE: 607861

SRB

SCALE: 1"=50'

SHEET INDEX

1. TITLE SHEET/GENERAL NOTES
2. PLAN/PROFILE
3. DROP INLET DETAILS

GENERAL NOTES

1. Contractor will be required to provide a minimum notice of 48 hours to utility companies prior to starting any excavation as follows:

   Kansas One-Call 687-2470

   The Contractor must notify the following in case of an emergency.

Multimedia	262-4270 or 263-2061
Kansas Gas Service	393-8650
KGE	383-8600
Peoples Natural Gas Company	942-8350 or 263-8161
Southwestern Bell Telephone Company	1-517-2611
City of Wichita Water Department	268-4908
City of Wichita Sewer Maintenance	268-4071

2. All work and materials on this project shall conform to City of Wichita standard specifications for Sewer Construction, except that the Contractor may use Advance Drainage Systems Ultra pipe or approved equal, or alternate drop inlet design approved by the Engineer.

3. No roof drains are to be connected to this storm sewer except by permit from the Office of Central Inspection.

4. Two-way traffic on Vine and Douglas streets shall be maintained during construction.

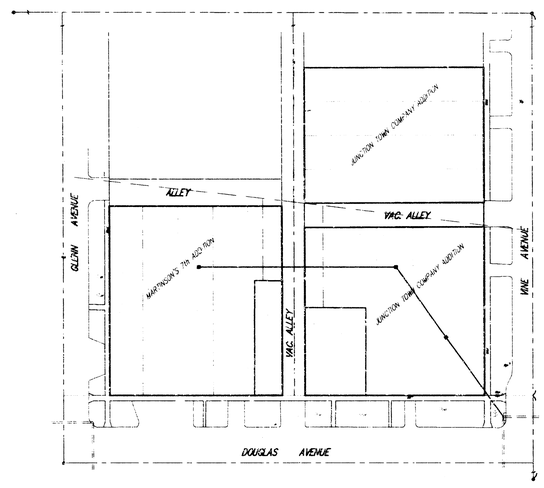

PROJECT LOCATION

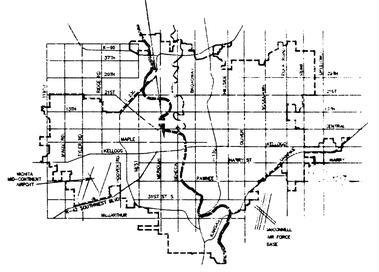

Booked
E-5
8/27/03
KDL



APPROVED AS NOTED
BY CITY ENGINEER OF WICHITA

Sanitary Sewers _____

Storm Sewers VR 6/7/91

Driveway Approaches _____

Water Mains _____

Paving _____

NOTE TO CONTRACTORS

Inspection and testing for this project are to be provided by a Licensed Consulting Engineering Firm under contract with the Owner/Developer. Said inspection to be in accordance with the City of Wichita standard construction engineering practices and certified by a Licensed Professional Engineer. No work shall be performed in dedicated easements or public right-of-way by the Contractor without such inspection, nor shall any work be commenced without written authorization by the City Engineer.

1.390E

BENCH MARK:

BENCHMARK
CITY OF WICHITA INTERSECTION GLENN AND MAPLE
ELEV. = 1091.14

CITY OF WICHITA, KANSAS
MICHAEL E. LINDEBAK - CITY ENGINEER

SRB
924 NORTH MAIN
WICHITA, KANSAS 67203
316-264-8305
FAX 264-4621
SAVOY, RUGGLES & BOHM, P.A.
ENGINEERING & SURVEYING

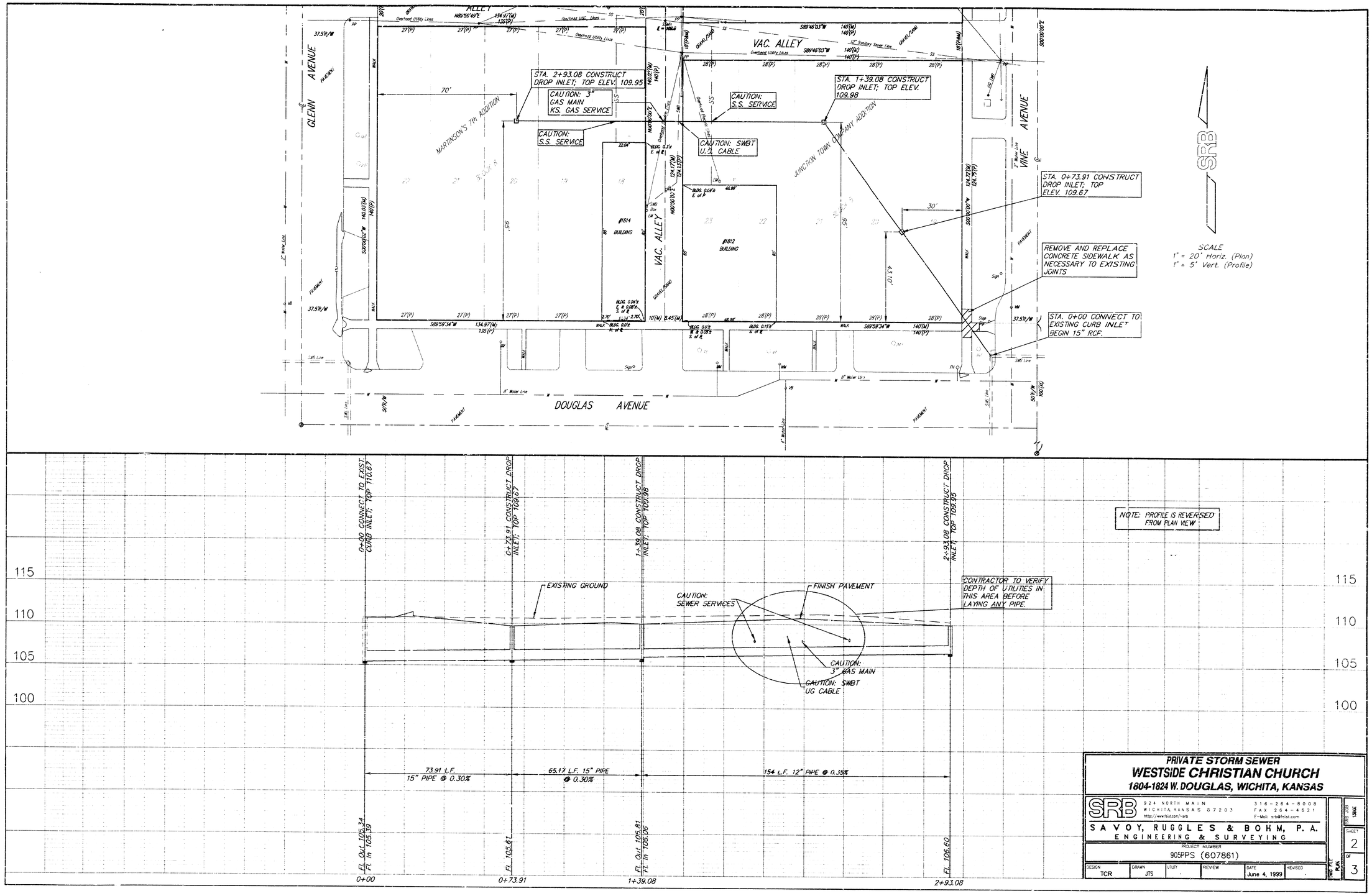

PRIVATE STORM SEWER

WESTSIDE CHRISTIAN CHURCH

1804-1824 W. DOUGLAS, WICHITA, KANSAS

SRB
924 NORTH MAIN
WICHITA KANSAS 67203
http://www.fcsi.com/srb
316-264-8008
FAX 264-4621
E-Mail: srb@fcsi.com

SAVOY, RUGGLES & BOHM, P. A.
ENGINEERING & SURVEYING

PROJECT NUMBER
905PPS (607861)

DESIGN	DRAWN	UTILITY	REVIEW	DATE	REVISED
TCR	JTS	-	-	June 4, 1999	-

SHEET NO. 2 OF 3 SHEETS
PLAN
SSD 259
1.30OE

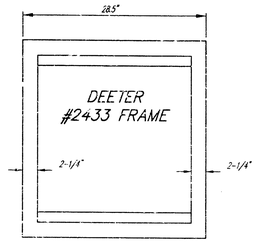

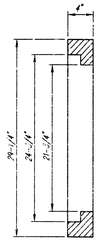

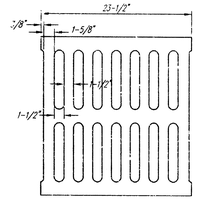

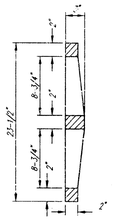

DEETER #2433 GRATE

NOTE: Grates shall be imprinted on the top surface with "CITY OF WICHITA" using letters at least 1" in height. Other marking methods may be approved by the engineer.

24" x 24" Frame and Grate Detail

Double 24" x 24" Frame Detail

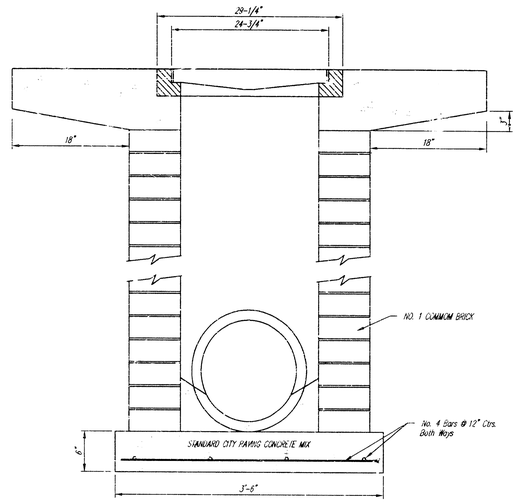

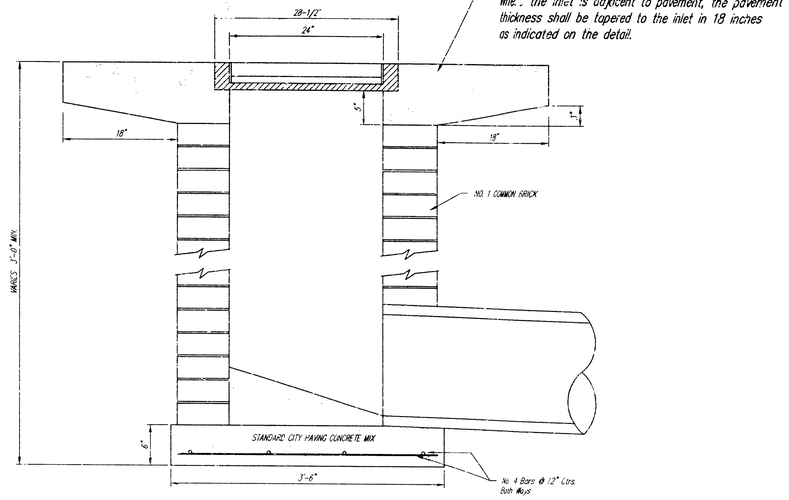

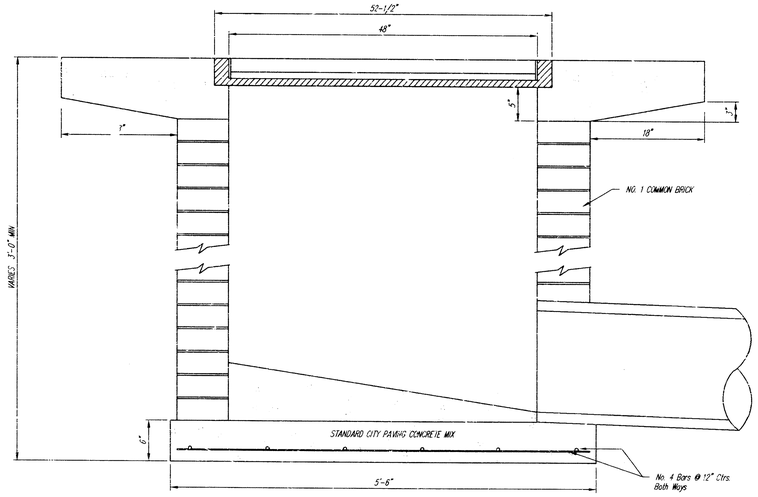

THE CITY OF WICHITA

CITY ENGINEER'S OFFICE
CITY HALL - SEVENTH FLOOR
455 NORTH MAIN STREET
WICHITA, KANSAS 67202
(316) 268-4501
(316) 268-4114 FAX

DROP INLET
2'x2' / 2'x4'

M. E. LINDEBAK P.E. – CITY ENGINEER

PROJECT NUMBER	INDEX CODE
905PPS	607861

DATE	SHEET
MAR 96	SHEET 3 OF 3

18 03 03 13