STORM WATER SEWER IMPROVEMENTS TO SERVE BALTHROP 3rd ADDITION

SATURN OF WICHITA

Project Number

938PPS(607861)

CITY OF WICHITA, KANSAS

Michael E. Lindebak, P. E., City Engineer

GENERAL NOTES

1. Contractor will be required to provide notice to utility companies a minimum of twenty-four (24) hours prior to any excavation, as follows:

   Kansas One-Call 687-2470

   The Contractor must notify the following in case of an emergency.

Cablevision	262-4270
or	263-2061
K.P.L. Gas Service Company	383-8650
Kansas Gas & Electric Company	383-8600
Peoples Natural Gas	442-5311
or	1-800-303-0357
Southwestern Bell Telephone Company	1-571-2611
City of Wichita Water Department	268-4913
City of Wichita Sewer Department	268-4071

2. Exist. utilities and their locations, as shown on the plans, represent the best information obtainable for design. Location information has been obtained from the various utility companies and is either from company records drawings or company-provided field locations. The Contractor will be required to work around existing utilities which do not conflict with proposed construction.

3. The Contractor to verify utility locations prior to construction of this project.

4. Utility service and installation shall be coordinated with the respective utility owners. Contacts are:

KG&E Gas	Steve Orth	261-5567
K.G. & E.	Miles Capps	261-6434
Wichita Water	Paul Bryant	268-4555
	Steve Palmer	268-4908
Southwestern Bell	Jim Tobin	268-2759

5. All areas disturbed by construction shall be seeded with rye Rebel II Fescure grass at a rate of 350 lbs./acre immediately following construction in that area.

6. Traffic affected by the construction of this project shall be handled in accordance with the latest edition of the Manual on Uniform Traffic Control Devices.

7. All lawn/turf areas disturbed by construction of proposed improvements shall be restored with the same grass/ sod as existing. Restoration of disturbed areas shall include, but not be limited to, top soil preparation, seeding, mulch and/or reseeding. All seeding/sodding work shall be in accordance with the City of Wichita standard specifications and the City of Wichita administrative regulation No. AR78 which governs cleanup and replacement following construction. All costs for this work shall be subsidiary to the lump sum price bid for "Site Restoration."

APPROVED AS NOTED BY CITY ENGINEER OF WICHITA

STORM SEWERS VRH 11/17/99

Inspection and testing for this project are to be provided by a Licensed Consulting Engineering Firm under contract with the Owner/Developer. Said inspection is to be in accordance with the City of Wichita standard construction engineering practices and certified by a Licensed P.E. Engineer. No work shall be performed in dedicated easements or public right-of-way by the Contractor without such inspection nor shall work be commenced without written authorization by the City Engineer. All construction and materials shall comply with the City of Wichita Specifications and Standards (on file and available in the City Engineer's Office).

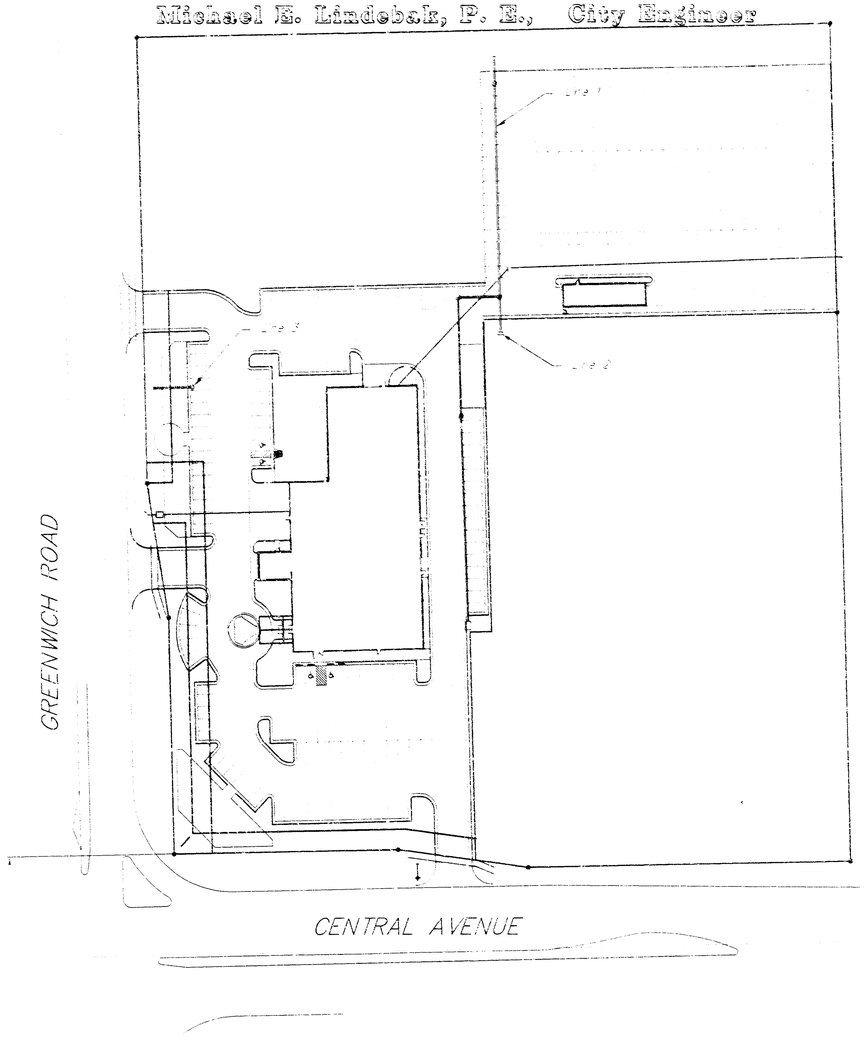

BENCHMARK:

Benchmark
Railroad Spike in Pole north side of south entry drive along Greenwich Road
Elevation 1385.74

INDEX:

1. Title Sheet
2. Plan and Profile of Line 1
3. Plan and Profile of Line 2 & 3
4. Type "P" Manholes
5. Standard Type 1 Curb Inlet
6. Drop Inlet

Date: AS-BUILT
Signed:

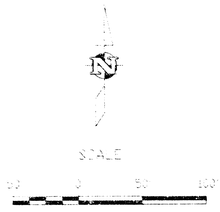

BOOKED
6-8-00
MCG
D-463

11/17/99

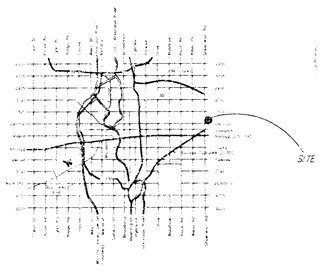

LOCATION MAP

AUSTIN P.A.
ENGINEERING SERVICES

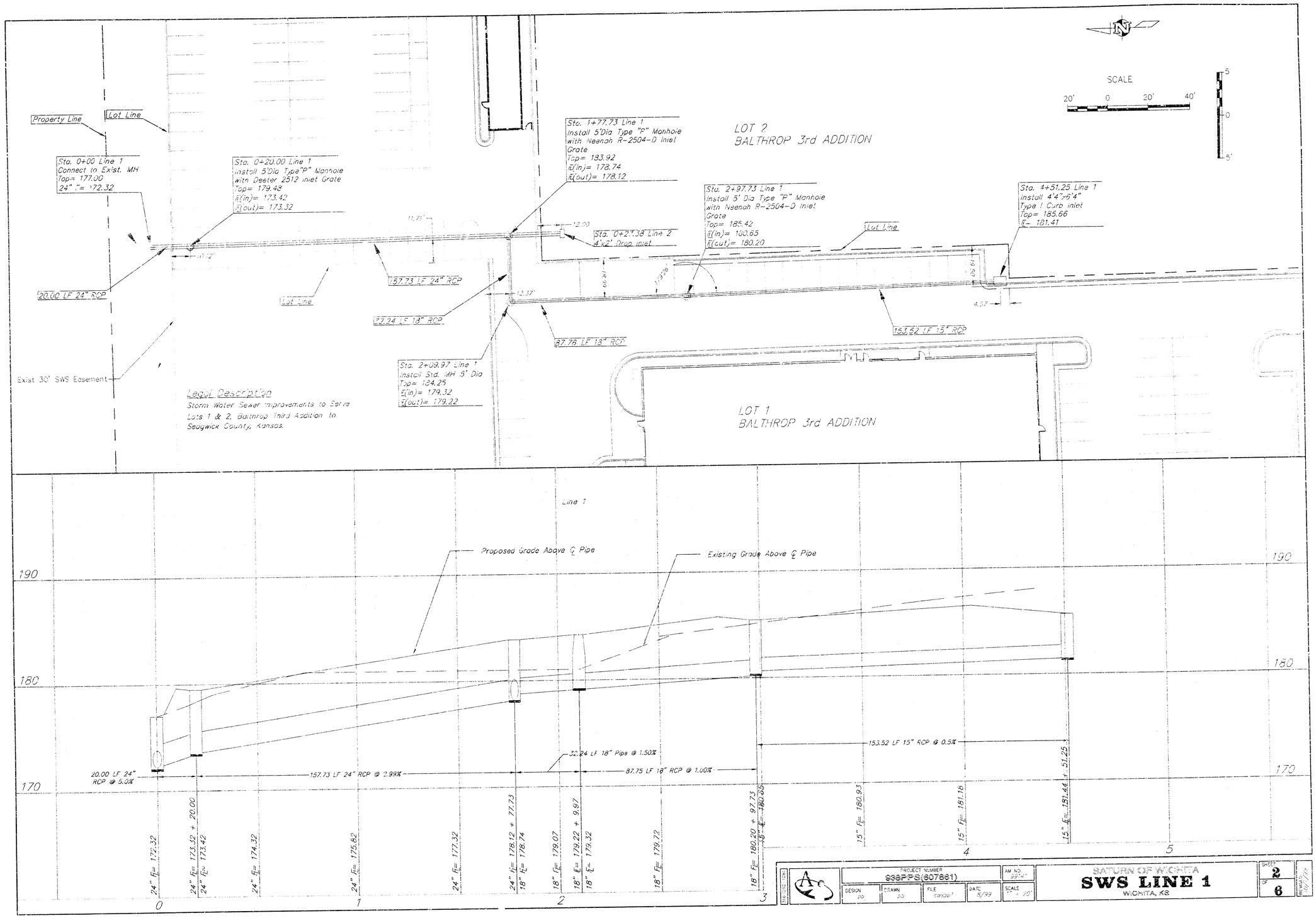
Property Line
Lot Line
Sta. 0+00 Line 1
Connect to Exist. MH
Top= 177.00
24" I.E.= 172.32
Sta. 0+20.00 Line 1
Install 5'Dia Type"P" Manhole
with Deeter 2512 Inlet Grate
Top= 179.48
E(in)= 173.42
E(out)= 173.32
Sta. 1+77.73 Line 1
Install 5'Dia Type "P" Manhole
with Neenah R-2504-D Inlet
Grate
Top= 183.92
E(in)= 178.74
E(out)= 178.12
LOT 2
BALTHROP 3rd ADDITION
Sta. 2+97.73 Line 1
Install 5' Dia Type "P" Manhole
with Neenah R-2504-D Inlet
Grate
Top= 185.42
E(in)= 180.65
E(out)= 180.20
Sta. 4+51.25 Line 1
Install 4'4"x5'4"
Type 1 Curb Inlet
Top= 185.66
E= 181.41
Sta. 0+27.38 Line 2
4'x2' Drop Inlet
20.00 LF 24" RCP
157.73 LF 24" RCP
32.24 LF 18" RCP
87.76 LF 18" RCP
153.52 LF 15" RCP
Exist 30' SWS Easement
Sta. 2+09.97 Line 1
Install Std. MH 5' Dia
Top= 184.25
E(in)= 179.32
E(out)= 179.22
LOT 1
BALTHROP 3rd ADDITION
SCALE
20' 0 20' 40'
5 0 5'
Legal Description
Storm Water Sewer Improvements to Serra
Lots 1 & 2, Balthrop Third Addition to
Sedgwick County, Kansas.
Line 1
Proposed Grade Above ℄ Pipe
Existing Grade Above ℄ Pipe
190
180
170
20.00 LF 24" RCP @ 5.0%
157.73 LF 24" RCP @ 2.99%
32.24 LF 18" Pips @ 1.50%
87.75 LF 18" RCP @ 1.00%
153.52 LF 15" RCP @ 0.5%
24" I.E.= 172.32
24" I.E.= 173.32 + 20.00
24" I.E.= 173.42
24" I.E.= 174.32
24" I.E.= 175.82
24" I.E.= 177.32
24" I.E.= 178.12 + 77.73
18" I.E.= 178.74
18" I.E.= 179.07
18" I.E.= 179.22 + 9.97
18" I.E.= 179.32
18" I.E.= 179.72
18" I.E.= 180.20 + 97.73
15" I.E.= 180.65
15" I.E.= 180.93
15" I.E.= 181.18
15" I.E.= 181.44 + 51.25
0
1
2
3
4
5
PROJECT NUMBER
936PPS(607881)
AM. NO.
9974
DESIGN
DRAWN
FILE
DATE
8/99
SCALE
SATURN OF WICHITA
SWS LINE 1
WICHITA, KS
SHEET
2
OF
6

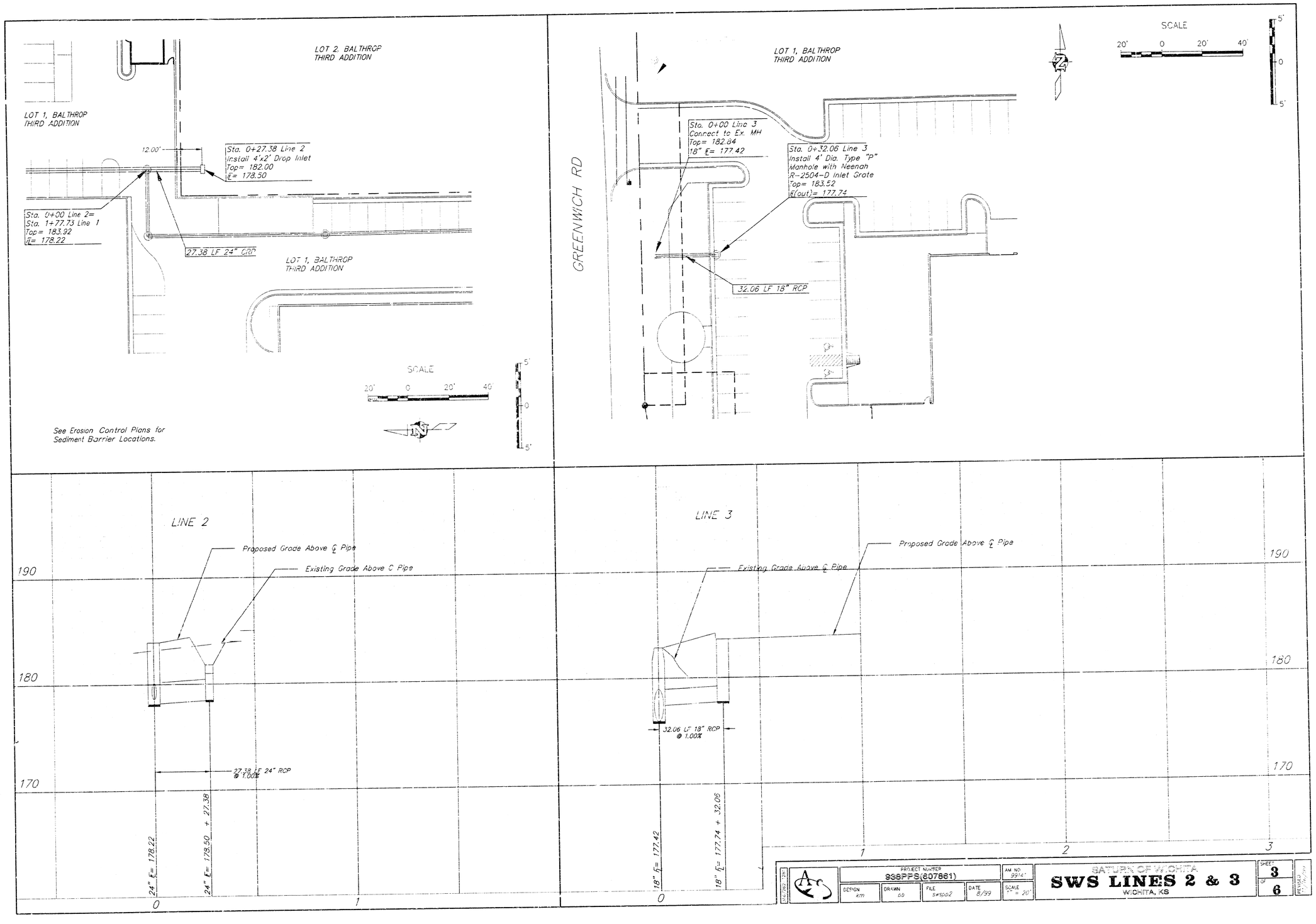

PROJECT NUMBER 938PPS(607861)			AM NO 9914	SATURN OF WICHITA SWS LINES 2 & 3 WICHITA, KS	SHEET 3 OF 6
DESIGN km	DRAWN bb	FILE swspp2	DATE 8/99	SCALE 1" = 20'	

SEWER APPURTENANCES DETAILS

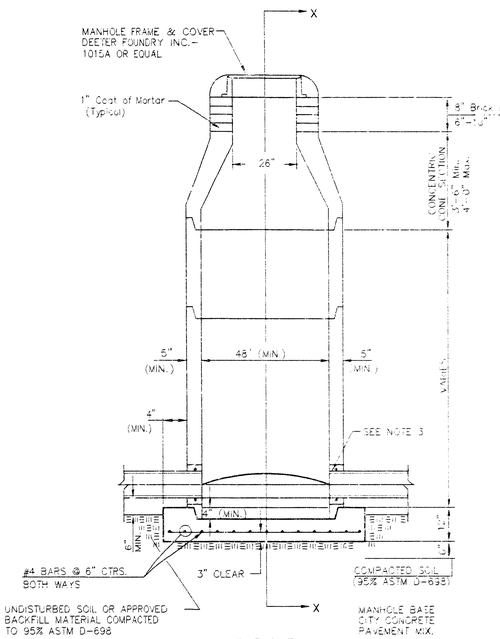

TYPE P
STANDARD MANHOLE

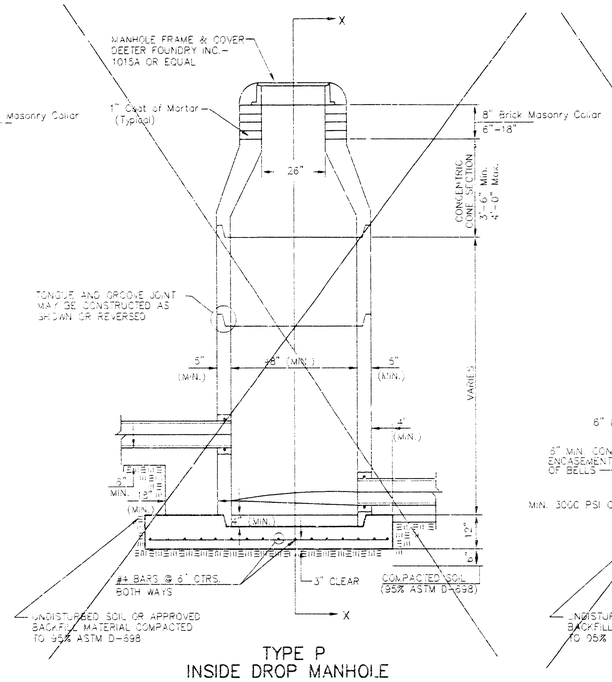

TYPE P
INSIDE DROP MANHOLE

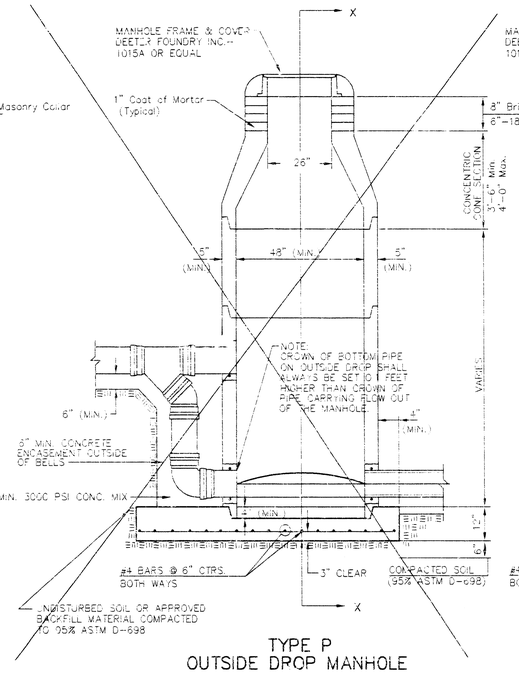

TYPE P
OUTSIDE DROP MANHOLE

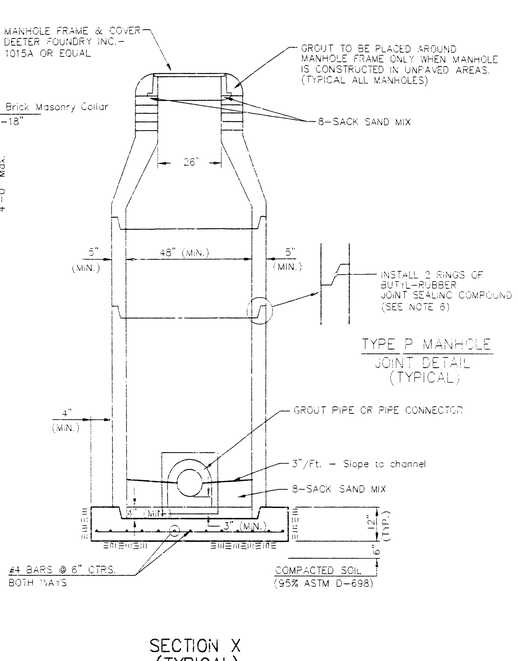

SECTION X
(TYPICAL)

GENERAL NOTES

PRECAST MANHOLE NOTES

1. ALL PRECAST CONCRETE MANHOLE SECTIONS SHALL CONFORM TO THE LATEST REVISIONS OF A.S.T.M. C478 AS MODIFIED BY THE SPECIFICATIONS.
2. NON-SHRINK GROUT SHALL BE NON-METALLIC TYPE.
3. APPROVED FLEXIBLE WATERSTOP GASKETS SHALL BE INSTALLED TO JOIN THE SEWER TO THE MANHOLE WALL WHEN A.B.S. COMPOSITE PIPE OR P.V.C. PIPE IS USED. FOR OTHER TYPES OF PIPE THE SEWER SHALL BE GROUTED IN PLACE WITH NON-SHRINK GROUT. THE SEWER PIPE SHALL BE SUPPORTED WITH CONCRETE ENCASEMENT A MINIMUM OF 3 FEET FROM THE MANHOLE WALL AND TO THE FIRST JOINT FOR V.C.P. SUCH THAT THE JOINT REMAINS FLEXIBLE.
4. ALL INSIDE SURFACES OF THE CONCRETE MANHOLE WHICH WOULD BE EXPOSED TO SEWER GAS SHALL BE COATED WITH 2 COATS THEMEC SERIES 66 HI-BUILD EPOXOLINE, DRY THICKNESS OF 8 MILS (MIN.)
5. EXTERIOR MANHOLE WALLS SHALL BE COATED WITH 1 COAT MOBILARMA 633 BITUMINOUS COATING.
6. JOINT SEALING COMPOUND SHALL BE KENT SEAL NO. 2 OR APPROVED EQUAL.
7. PRECAST MANHOLES SHALL BE SET AT LEAST 4 INCHES INTO THE MANHOLE BASE.
8. TOP OF MANHOLE FLOOR SLAB SHALL BE AT LEAST 3 INCHES BELOW THE FLOW LINE OF THE OUTLET PIPE TO INSURE SUFFICIENT MINIMUM THICKNESS OF SHAPED INVERT.
9. LIFTING HOLES SHALL BE FILLED WITH NON-SHRINK GROUT AND THE INTERIOR SURFACE COATED AS SPECIFIED.
10. MORTAR USED IN MASONRY CONSTRUCTION SHALL CONTAIN 8 SACKS OF CEMENT PER CUBIC YARD. CONCRETE USED IN MANHOLE BASES SHALL CONFORM TO THE REQUIREMENTS OF CONCRETE FOR CONCRETE PAVEMENT CONSTRUCTION AS SPECIFIED IN THE CITY STANDARD PAVING SPECIFICATIONS USING CITY CONCRETE PAVEMENT MIX WITHOUT AIR ENTRAINING ADMIXTURE. MORTAR SHALL BE PLACED AROUND THE MANHOLE RING AS SHOWN ON THE DRAWINGS WHEN MANHOLES ARE CONSTRUCTED IN UNPAVED AREAS. MANHOLES CONSTRUCTED WHERE PIPE SIZES ARE SMALLER THAN 24" SHALL HAVE AN INSIDE DIAMETER OF 4'. MANHOLES CONSTRUCTED WHERE PIPE SIZES ARE 24" OR LARGER SHALL HAVE AN INSIDE DIAMETER OF 5'. COMPLETED MANHOLE SHALL BE WITHOUT LEAKS AND WATER TIGHT.
11. REINFORCING STEEL SHALL BE INSTALLED IN THE MANHOLE BASES AND SHALL CONSIST OF NO. 4 BARS PLACED ON 6" CENTERS IN BOTH DIRECTIONS. THE MANHOLE BASE REINFORCEMENT SHALL BE PLACED AT LCAST 3" ABOVE THE BOTTOM OF THE MANHOLE BASE. ALL COSTS FOR FURNISHING AND INSTALLING REINFORCING STEEL SHALL BE INCLUDED IN THE UNIT PRICE BID FOR THE MANHOLE.
12. OPENINGS SHALL BE CUT INTO THE MANHOLE WALL WHEN OUTSIDE DROPS ARE CONSTRUCTED ON EXISTING MANHOLES. SUCH OPENINGS CUT INTO EXISTING MANHOLES SHALL BE AS SMALL AS PRACTICAL TO FACILITATE INSTALLING AND GROUTING THE NEW PIPE IN PLACE. WATERSTOP GASKETS SHALL BE USED WITH P.V.C. AND A.B.S. COMPOSITE PIPE. THE NEW PIPE SHALL BE GROUTED INTO THE OPENING USING AN APPROVED NONSHRINK GROUT FOR THE FULL MANHOLE WALL THICKNESS. THE EXTERIOR OF THE COMPLETED CONNECTION SHALL BE SEALED WITH AN APPROVED BITUMINOUS COATING SUCH THAT THE CONNECTION WILL BE WATER TIGHT. FLOOR OF MANHOLE SHALL BE MODIFIED TO FORM NEW FLOW CHANNEL FOR THE NEW CONNECTION AS INDICATED BY THE DRAWING. THIS WORK, INCLUDING MODIFICATION OF MANHOLE FLOOR, SHALL BE PAID FOR AT THE UNIT PRICE BID FOR OUTSIDE DROP STACK CONSTRUCTED ON EXISTING MANHOLE.
13. THE FLOORS OF ALL MANHOLES SHALL BE SHAPED WITH FLOW CHANNELS SUCH THAT THE MANHOLES WILL BE SELF CLEANING AND FREE OF AREAS WHERE SOLIDS COULD BE DEPOSITED AS SEWAGE FLOWS THROUGH THE MANHOLE FROM ALL INLET PIPES TO THE OUTLET PIPE. FLOW CHANNELS SHALL BE FORMED TO MATCH THE BOTTOM HALVES OF THE INFLOWING PIPES AND THE OUTFLOWING PIPE AS SHOWN BY THE DRAWINGS EXCEPT FOR INSIDE DROP MANHOLES. FLOW CHANNELS FOR INSIDE DROP MANHOLES SHALL BE CONSTRUCTED AS INDICATED BY THE DRAWING. MANHOLE FLOORS SHALL HAVE SLOPES OF .3 INCHES PER FOOT IN THE AREAS OUTSIDE OF THE FLOW CHANNELS SLOPED TOWARD THE FLOW CHANNELS. PIPES LAID THROUGH MANHOLES SHALL HAVE THE TOP HALF REMOVED TO NEAT LINES FOR THE FULL INSIDE DIAMETER OF THE MANHOLE. MANHOLE FLOORS SHALL THEN BE SHAPED AROUND THE BOTTOM HALF OF THE PIPE WHICH FORMS THE FLOW CHANNEL.
14. PIPES INSTALLED WITHIN THE EXCAVATION MADE FOR THE MANHOLE SHALL BE CRADLED WITH CONCRETE TO THE LIMITS OF THE MANHOLE EXCAVATION. WHEN CLAY PIPE IS USED, THE CRADLE SHALL EXTEND TO THE FIRST JOINT OUTSIDE THE MANHOLE. THE CRADLE SHALL BE TERMINATED AT THE CLAY PIPE JOINT IN A MANNER WHICH WILL MAINTAIN THE FLEXIBILITY OF THE JOINT. COST OF CRADLE WITHIN MANHOLE EXCAVATION OR TO CLAY PIPE JOINTS ADJACENT TO MANHOLE SHALL BE INCLUDED IN THE UNIT PRICE BID FOR THE MANHOLE.
15. MANHOLE COVER CASTINGS AND MANHOLE FRAME CASTINGS SHALL CONFORM TO THE REQUIREMENTS AS INDICATED IN THE STANDARD SPECIFICATIONS AND AS SHOWN IN THE STANDARD DETAIL DRAWING.
16. THE VERTICAL DROP IN INSIDE DROP MANHOLES SHALL NOT EXCEED 2' FOR INFLOWING PIPES SIZED 12" OR SMALLER AND 3' FOR INFLOWING PIPES LARGER THAN 12". THE CROWNS OF INFLOWING PIPES SHALL NEVER BE SET LOWER THAN THE CROWN OF THE OUTFLOWING PIPE.
17. STANDARD MANHOLES AND STANDARD INSIDE DROP MANHOLES SHALL BE BID AS STANDARD MANHOLES FOR THE TYPE AND DIAMETER INDICATED. OUTSIDE DROP MANHOLES SHALL BE BID AS STANDARD OUTSIDE DROP MANHOLES FOR THE TYPE AND DIAMETER INDICATED. ALL MANHOLE DIAMETERS WILL BE 4' UNLESS INDICATED OTHERWISE.
18. A BRICK MASONRY COLLAR SHALL BE INSTALLED BETWEEN THE CAST IRON FRAME AND THE CONCENTRIC CONE. THE COLLAR WILL HAVE 8" WALLS AND A VERTICAL HEIGHT OF 6" MINIMUM AND 18" MAXIMUM. A 1" COAT OF MORTAR WILL BE PLASTERED ON THE OUTSIDE OF THE COLLAR. THE USE OF PRE-CAST CONCRETE SPACERS FOR MANHOLE TOP ADJUSTMENT IS ALSO ALLOWED.

THE CITY OF WICHITA

CITY ENGINEER'S OFFICE
CITY HALL - SEVENTH FLOOR
455 NORTH MAIN STREET
WICHITA, KANSAS 67202
(316) 268-4351
(316) 268-4114 FAX

STANDARD
TYPE 'P'
MANHOLES

M. E. LINDEBAK P.E. - CITY ENGINEER

PROJECT NUMBER	INDEX CODE
938 PPS	(607861)
DATE: MAR 96	SHEET 4 OF 6

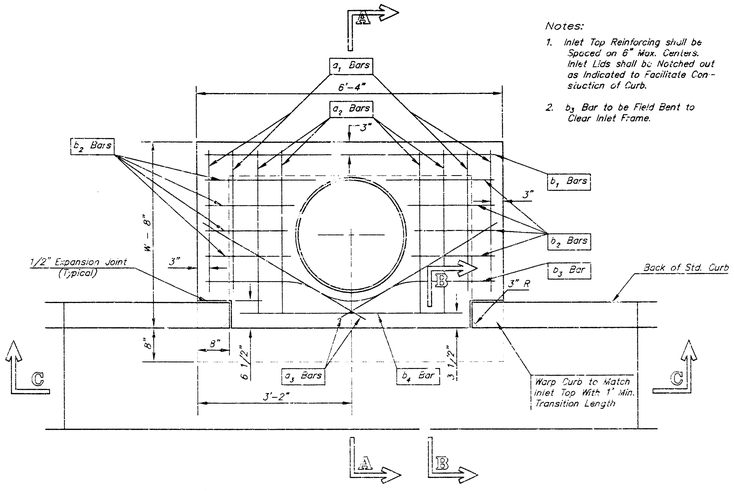

PLAN

Notes:

1. Inlet Top Reinforcing shall be Spaced on 6" Max. Centers. Inlet Lids shall be Notched out as Indicated to Facilitate Construction of Curb.
2. b_3 Bar to be Field Bent to Clear Inlet Frame.

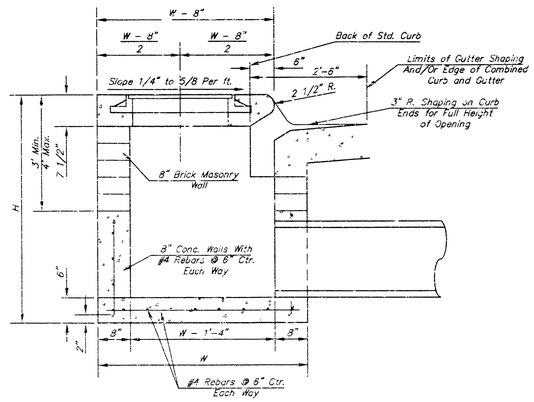

SECTION A–A

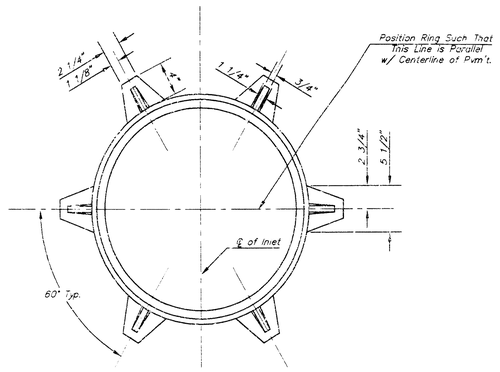

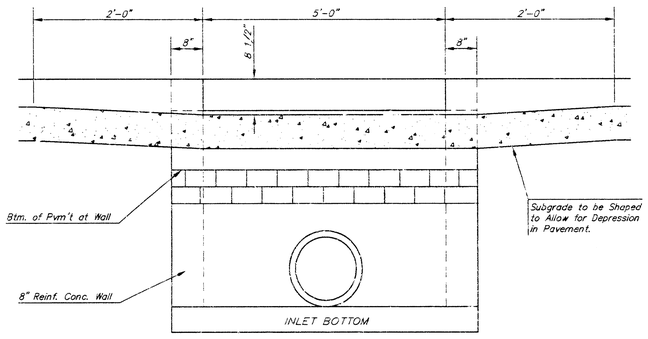

SECTION C–C

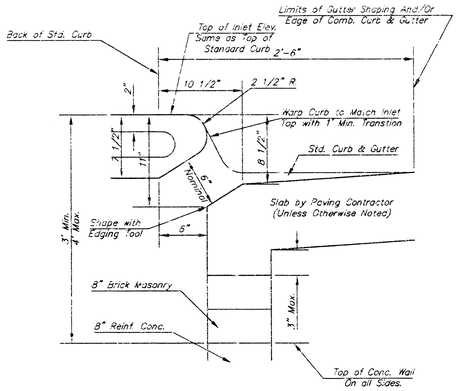

SECTION B–B

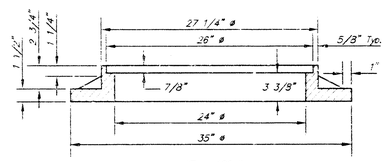

WT. = 180 lbs.

MANHOLE RING AND COVER

*See City of Wichita Standard Manhole Ring and Cover Detail Sheet for Cover Details to Be Used With Inlet Frame.

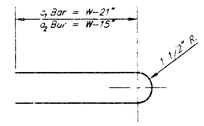

BENDING DIAGRAM

STEEL SCHEDULE

BAR		a_1	a_2	a_3	b_1 W=4'-4"	b_1 W=5'-4"	b_1 W=6'-4"	b_1 W=7'-4"	b_1 W=8'-4"	b_2	b_3	b_4	Wt. Lbs.
NUMBER		4	4	2	1	3	5	7	9	6	1	1	
SIZE		#4	#4	#4	#4	#4	#4	#4	#4	#4	#4	#6	
LENGTH	W=4'-4"	5'-7"	6'-7"	4'-0"	6'-1"	–	–	–	–	1'-9"	6'-2"	4'-8"	60±
	W=5'-4"	7'-7"	8'-7"	5'-0"	–	6'-1"	–	–	–	1'-9"	6'-2"	4'-8"	81±
	W=6'-4"	9'-7"	10'-7"	6'-0"	–	–	6'-1"	–	–	1'-9"	6'-2"	4'-8"	101±
	W=7'-4"	11'-7"	12'-7"	7'-0"	–	–	–	6'-1"	–	1'-9"	6'-2"	4'-8"	121±
	W=8'-4"	13'-7"	14'-7"	8'-0"	–	–	–	–	6'-1"	1'-9"	6'-2"	4'-8"	141±

Note: a_3 Bars to be Placed Approx 2" Below Top of Inlet Cover.

STANDARD CURB INLET PRECAST TOPS				
W	PRE-CAST TOP SIZE		PIPE SIZE	CU. YD. CONC.
4'-4"	3'-8"	6'-4" 7 1/2"	21" & SMALLER	0.38±
5'-4"	4'-8"	6'-4" 7 1/2"	24" & 30"	0.51±
6'-4"	5'-8"	6'-4" 7 1/2"	36" & 42"	0.64±
7'-4"	6'-8"	5'-4" 7 1/2"	48" & 54"	0.77±
8'-4"	7'-8"	6'-4" 7 1/2"	60" & 66"	0.90±

GENERAL NOTES

1. Concrete tops to be installed on thin mortar cushion to insure full support along brick walls. Concrete tops may be cast in place or precast. Concrete used for inlet construction shall be concrete pavement mix.
2. Contractor shall have the option of constructing 8" brick masonry walls between the concrete inlet base and top on this inlet when W=6'-4" and H=7'-0" or less.
3. Inlet invert shall be shaped with 8 sack sand mix concrete to create flow channels and to increase hydraulic efficiency such that the inlet will be self cleaning between all inlet and/or outlet pipes.
4. The ends of all pipes installed in inlets shall be cut off flush with the inside face of the inlet wall.

THE CITY OF WICHITA

CITY ENGINEER'S OFFICE
CITY HALL – SEVENTH FLOOR
455 NORTH MAIN STREET
WICHITA, KANSAS 67202
(316) 268-4501
(316) 268-4114 FAX

STANDARD TYPE 1 CURB INLET

OPENING = 6" x 5'-0"

W. E. LINDEBAK P.E. – CITY ENGINEER

PROJECT NUMBER	INDEX CODE
938 PPS	(607861)
DATE	SHEET 5 OF 6
MAR 96	

STYP1-S.DWG

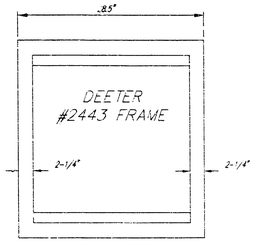

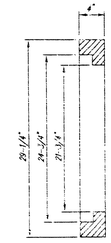

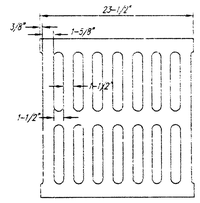

DEETER #2433 GRATE

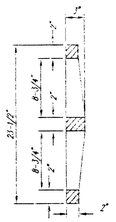

NOTE: Grates shall be imprinted on the top surface with "CITY OF WICHITA" using letters at least 1" in height. Other marking methods may be approved by the engineer.

24" x 24" Frame and Grate Detail

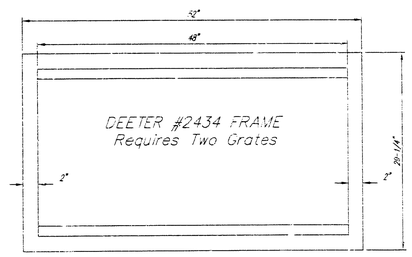

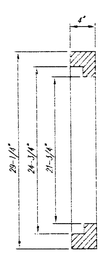

Double 24" x 24" Frame Detail

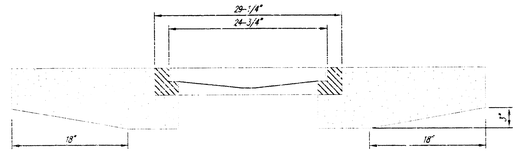

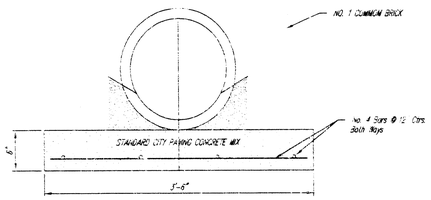

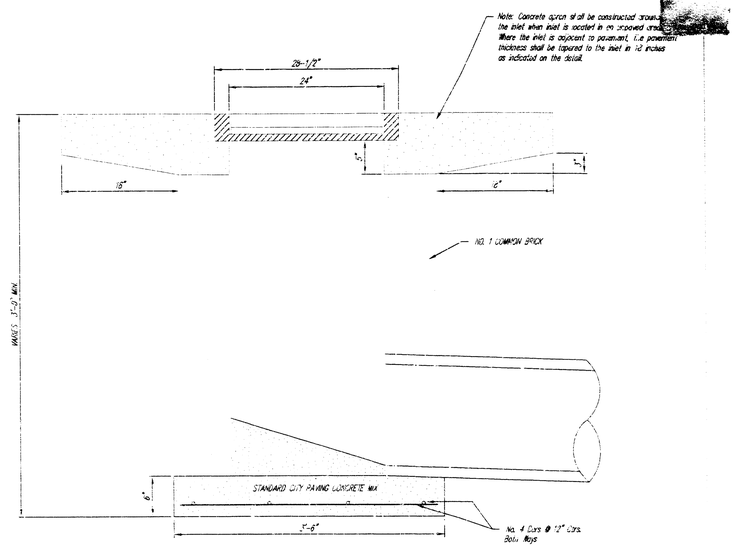

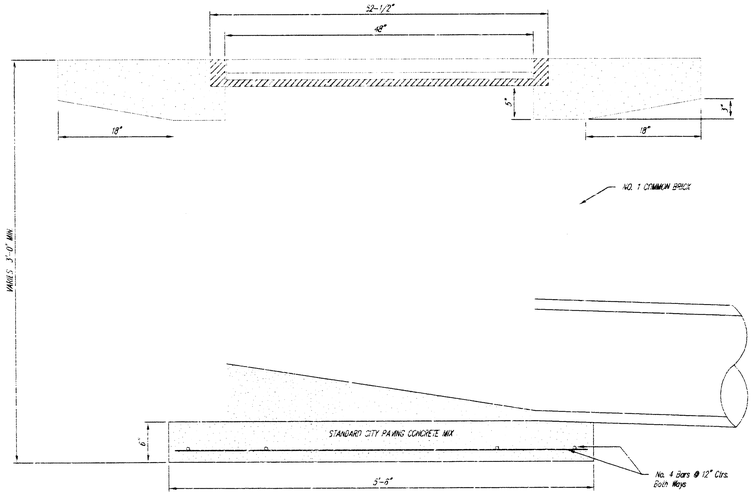

THE CITY OF WICHITA

CITY ENGINEER'S OFFICE
CITY HALL - SEVENTH FLOOR
455 NORTH MAIN STREET
WICHITA, KANSAS 67202
(316) 268-4351
(316) 268-4114 FAX

DROP INLET
2' X 2'/2' X 4'

M. E. LINDEBAK P.E. - CITY ENGINEER

PROJECT NUMBER	INDEX CODE
933 PPS	(607861)
DATE: MAR 96	SHEET 6 OF

DROPINLT.DWG