SHEET NO.	TOTAL SHEETS
1	2

PRIVATE STORM WATER SEWER INPROVEMENTS
IN
DILLON 4TH ADDITION
PRIVATE PROJECT NO. 941PPS(607861)

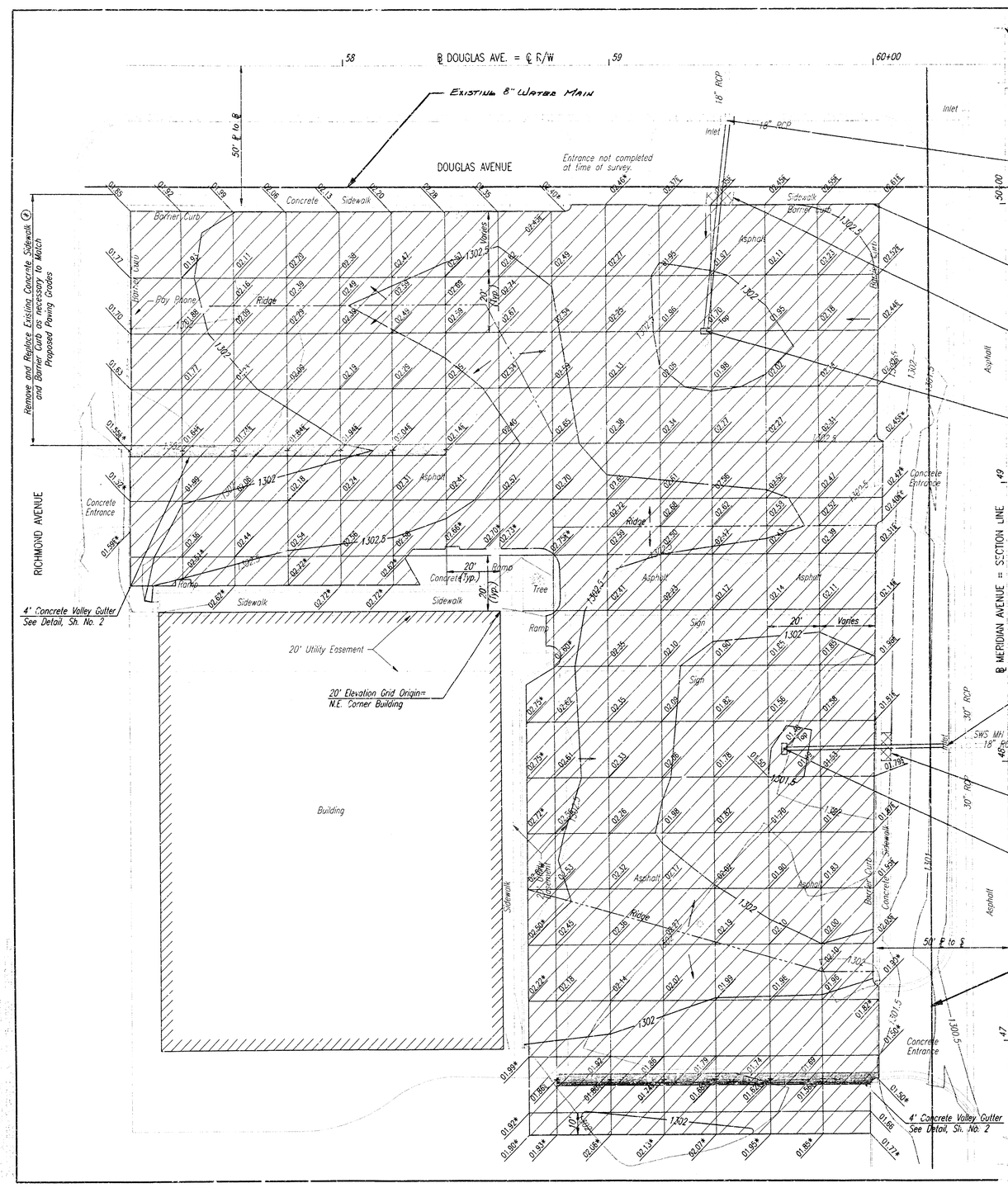

℄ Douglas Ave. Sta. 59+44.9, 20.5' Rt. = ℄ Existing Inlet = Sta. 20+00.0, SWS Line No. 2 Break thru Existing Inlet Wall and Begin SWS Construction by Installing New 15" RCP. ℄ In=1297.56(S) (110.16 City Datum) ℄ Out=1297.41(E)(Exist.)(110.01 City Datum) Install 75.3 L.F. 15" RCP(S) @ 0.50%

NE Cor., Lot 1, Dillon 4th Addition= ℄ Meridian Ave., Sta. 50+00, 50' Lt.= ℄ Douglas Ave., Sta. 60+00, 50' Rt.

Remove and Replace Concrete Sidewalk Ⓐ and Barrier Curb as necessary to permit SWS Construction

℄ Douglas Ave. Sta. 59+36.7, 95.4' Rt. = Sta. 20+75.3, SWS Line No. 2 Construct Std. Area Inlet Top Elev.=1301.70 (114.30 City Datum) ℄ Out=1297.94(N) (110.54 City Datum) Install Inlet Protection See Sh. No. 2

℄ Meridian Ave. Sta. 48+05.7, 24.0' Lt. = ℄ Existing Inlet= Sta. 10+00.0, SWS Line No. 1 Break thru Existing Inlet Wall and Begin SWS Construction by Installing New 15" RCP. ℄ In=1296.65(W) (109.25 City Datum) ℄ Out=1295.50(E)(Exist.)(109.10 City Datum) Install 61.8 L.F. 15" RCP(W) @ 0.50%

Remove and Replace Concrete Sidewalk Ⓐ and Barrier Curb as necessary to permit SWS Construction

℄ Meridian Ave. Sta. 48+05.7, 65.8' Lt. Sta. 10+61.8, SWS Line No. 1 Construct Std. Area Inlet Top Elev.=1301.40 (114.00 City Datum) ℄ Out=1296.95(E) (109.55 City Datum) Install Inlet Protection See Sh. No. 2

SCALE: 1"=20'

TOPOGRAPHIC SURVEY PERFORMED BY GARBER SURVEYING SERVICE, P.A.
ADD 1300 TO ELEVATION SHOWN FOR M.S.L.
M.S.L.=CITY DATUM + 1187.4

LEGEND

PAVEMENT REMOVAL SEE GENERAL NOTES

Ⓐ CONTRACTOR SHALL OBTAIN ANY NECESSARY PERMITS BEFORE REMOVING SIDEWALK. CONCRETE SIDEWALK CONSTRUCTION SHALL BE IN ACCORDANCE WITH CITY OF WICHITA STANDARD SPECIFICATIONS.

MATCH EXISTING ELEVATION

BUL
3/11/99
Date
Signed

DARWIN F. CARLSON
LICENSED
14396
11-5-99
PROFESSIONAL ENGINEER

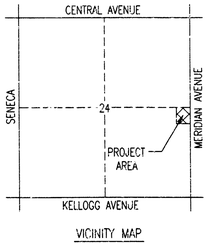

VICINITY MAP

APPROVED AS NOTED
BY CITY ENGINEER OF WICHITA

SANITARY SEWERS _____
STORM SEWERS VRH 11/5/99
DRIVEWAY APPROACHES _____
WATER MAINS _____
PAVING _____

GENERAL NOTES

UNDERGROUND UTILITY SERVICE LINES AND OVERHEAD UTILITY POLE LINES ARE TO BE ADJUSTED AS NECESSARY BY OTHERS PRIOR TO CONSTRUCTION UNLESS THE PLANS SPECIFICALLY CALL FOR THEIR ADJUSTMENT BY THE CONTRACTOR. EXISTING UTILITIES AND THEIR LOCATION, AS SHOWN ON THE PLANS, REPRESENT THE BEST INFORMATION OBTAINABLE FOR DESIGN. LOCATION INFORMATION HAS BEEN OBTAINED FROM THE VARIOUS UTILITY COMPANIES AND IS EITHER FROM COMPANY RECORD DRAWINGS OR COMPANY PROVIDED FIELD LOCATIONS. THE CONTRACTOR WILL BE REQUIRED TO WORK AROUND EXISTING UTILITIES WITHIN THE RIGHT-OF-WAY WHICH DO NOT CONFLICT WITH PROPOSED CONSTRUCTION. CONTRACTOR SHALL SATISFY HIMSELF OF SUBSURFACE CONDITIONS PRIOR TO BIDDING.

RUBBLE FROM THE REMOVAL OF MISCELLANEOUS STRUCTURES AND PAVEMENT SHALL BE DISPOSED OF ON SITES TO BE PROVIDED BY THE CONTRACTOR AND APPROVED AS NOTED

ALL DISPOSAL SITES MUST BE APPROVED BY THE KANSAS DEPARTMENT OF HEALTH AND ENVIRONMENT. MATERIAL EITHER STOCKPILED OR DISPOSED OF IN A FLOOD PLAIN WOULD REQUIRE A KANSAS STATE BOARD OF AGRICULTURE PERMIT. ANY MATERIAL DUMPED IN WATERS OF THE UNITED STATES OR WETLANDS IS SUBJECT TO U.S. CORPS OF ENGINEERS PERMITTING REGULATIONS. ANY MATERIAL BURIED OR STOCKPILED BEYOND APPROVED CONSTRUCTION LIMITS WOULD REQUIRE ADDITIONAL ARCHEOLOGICAL INVESTIGATIONS UNLESS BURIED IN A PREVIOUSLY APPROVED BORROW LOCATION

EXCESS EXCAVATED MATERIAL SHALL BECOME THE PROPERTY OF THE CONTRACTOR AND SHALL BE REMOVED FROM THE PROJECT AREA.

CONTRACTOR SHALL PROVIDE A MINIMUM FORTY-EIGHT (48) HOUR ADVANCE NOTICE (EXCLUDING WEEKENDS AND HOLIDAYS) PRIOR TO BEGINNING ANY EXCAVATION, TO KANSAS ONE-CALL SYSTEM, A UTILITY LOCATION SERVICE, AT (316) 687-2470 TO REQUEST THE FOLLOWING UTILITY COMPANIES TO LOCATE ALL EXISTING LINES WITHIN THE PROJECT AREA: K.G.S. GAS, PEOPLES NATURAL GAS, K.G.E. ELECTRIC SOUTHWESTERN BELL TELEPHONE, MULTIMEDIA CABLEVISION, CITY OF WICHITA SEWER MAINTENANCE AND CITY OF WICHITA WATER DEPARTMENT.

THE CONTRACTOR SHALL BE RESPONSIBLE FOR PRESERVING PROPERTY IRONS. THE CONTRACTOR WILL BE REQUIRED TO RE-ESTABLISH ANY PROPERTY IRONS WHICH ARE DAMAGED OR DESTROYED BY HIS CONSTRUCTION OPERATIONS. SUCH IRONS SHALL BE RE-ESTABLISHED BY A LICENSED LAND SURVEYOR IN ACCORDANCE WITH STATE LAWS

ALL EXISTING BARRIER CURB AND ADJACENT CITY SIDEWALK SHALL BE PRESERVED AND PROTECTED FROM DAMAGE, EXCEPT AS NOTED ON THE PLAN.

ALL STORM SEWER CONSTRUCTION SHALL BE IN ACCORDANCE WITH CITY OF WICHITA STANDARD SPECIFICATIONS.

THE CONTRACTOR SHALL STRIPE THE PARKING LOT USING APPROVED PAINT PER THE JANUARY, 1972 PLAN SHEET #1, TO BE PROVIDED BY THE OWNER. A SUFFICIENT NUMBER OF THE PARKING SPACES SHALL BE STRIPED AND SIGNED FOR DISABLED PARKING PER THE A.D.A. REQUIREMENTS.

ANY UNPAVED AREAS DISTURBED DURING CONSTRUCTION SHALL BE SEEDED AS DIRECTED BY THE OWNER.

NOTE TO CONTRACTOR

INSPECTION AND TESTING FOR THIS PROJECT IS TO BE PROVIDED BY A LICENSED CONSULTING ENGINEERING FIRM CONTRACTED BY THE OWNER/DEVELOPER. SAID INSPECTION TO BE IN ACCORDANCE WITH THE CITY OF WICHITA STANDARD CONSTRUCTION ENGINEERING PRACTICES AND CERTIFIED BY A LICENSED PROFESSIONAL ENGINEER. NO WORK SHALL BE PERFORMED IN DEDICATED EASEMENTS OR PUBLIC RIGHT-OF-WAY BY THE CONTRACTOR UNTIL SUCH INSPECTION IS ARRANGED FOR AND REQUIRED BONDS HAVE BEEN SUBMITTED TO AND APPROVED BY THE CITY NOR SHALL ANY WORK BE COMMENCED IN DEDICATED EASEMENTS OR PUBLIC RIGHT-OF-WAY WITHOUT WRITTEN AUTHORIZATION BY THE CITY ENGINEER. IMPROVEMENTS PERFORMED UNDER THIS PROJECT SHALL NOT BE ACCEPTED BY THE CITY UNTIL ALL APPLICABLE DOCUMENTATION HAS BEEN SUBMITTED TO THE CITY ENGINEER. THIS MAY INCLUDE: AS-BUILT DRAWINGS, INSPECTION LOGS, TEST DOCUMENTATION, TV TAPES, AND A CERTIFICATE OF COMPLETION. THE ABOVE SHAL BE PERFORMED BY THE CONSULTING FIRM CONTRACTED TO INSPECT THIS PROJECT.

DILLONS STORE #30
DOUGLAS & MERIDIAN

GRADING PLAN

Professional Engineering Consultants, P.A.
303 S. TOPEKA • WICHITA, KANSAS 67202
316-262-2691 • FAX 316-262-3003

Designed by	DRC	Checked by	
Drawn by	DEP	Date NOV., 1999	Job No 99517

16-4-2-1

SHEET NO.	TOTAL SHEETS
2	2

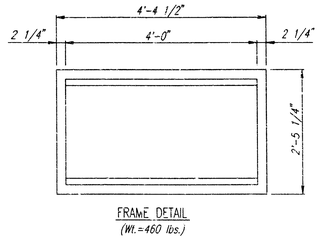

FRAME DETAIL
(Wt.=460 lbs.)

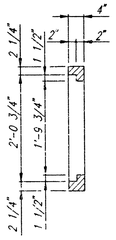

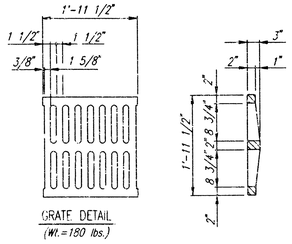

GRATE DETAIL
(Wt.=180 lbs.)

GENERAL NOTES

CONCRETE SHALL BE C.O.W. STANDARD PAVING MIX. ALL EXPOSED EDGES SHALL BE FINISHED WITH AN APPROVED EDGING TOOL.

REINFORCING STEEL SHALL BE A MINIMUM GRADE 40, A.S.T.M. 1615. ALL DIMENSIONS RELATIVE TO PLACEMENT OF REINFORCING ARE TO THE CENTERLINE OF BARS UNLESS OTHERWISE NOTED.

INLET CASTINGS SHALL BE MANUFACTURED USING GOOD QUALITY GRAY IRON CONFORMING TO CLASS 30 OF A.S.T.M. DESIGNATION A-48. DIMENSIONS AND WEIGHTS SHOWN ON THE DETAILED DRAWINGS SHALL BE CONSIDERED AS MINIMUM REQUIREMENTS AND ANY DEVIATIONS FROM THE DIMENSIONS SHOWN MUST BE SPECIFICALLY APPROVED. THE FINISHED CASTINGS SHALL BE OF UNIFORM QUALITY, FREE FROM BLOWHOLES, POROSITY, HARD SPOTS, SHRINKAGE DISTORTIONS OR OTHER DEFECTS.

CONSTRUCTION REQUIREMENTS AND MATERIALS FOR MASONRY WALLS SHALL CONFORM TO THE REQUIREMENTS OF THE STANDARD SPECIFICATIONS.

INLET FLOOR SHALL BE SHAPED WITH UNREINFORCED CONCRETE (8 SACK SAND MIX) TO CREATE FLOW CHANNELS AND TO INCREASE HYDRAULIC EFFICIENCY SUCH THAT THE INLET WILL BE SELF CLEANING BETWEEN ALL INLET AND/OR OUTLET PIPES.

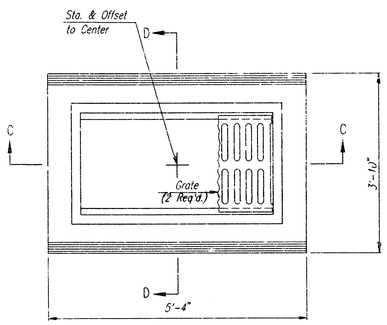

PLAN

BENDING DIAGRAM

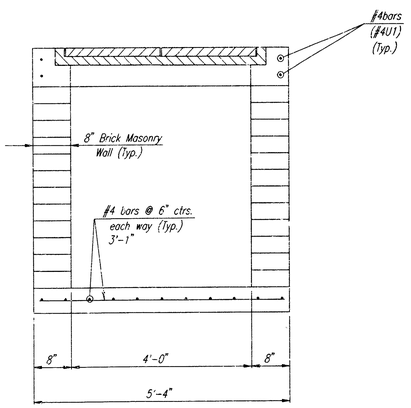

SECTION C-C

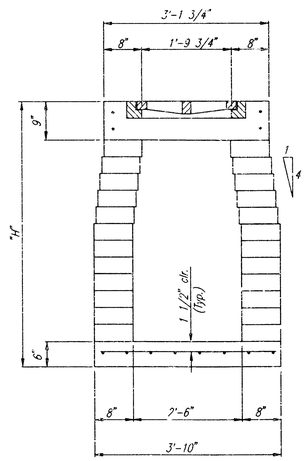

SECTION D-D

AREA INLET

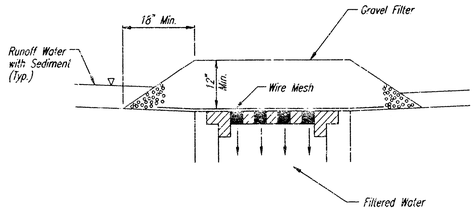

AREA INLET PROTECTION
GRAVEL AND WIRE MESH

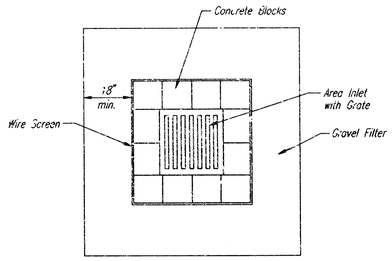

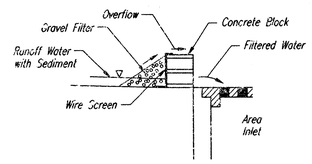

AREA INLET PROTECTION
BLOCK AND GRAVEL FILTER

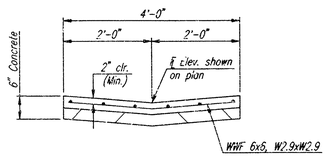

CONCRETE VALLEY GUTTER DETAIL
Where shown on plan

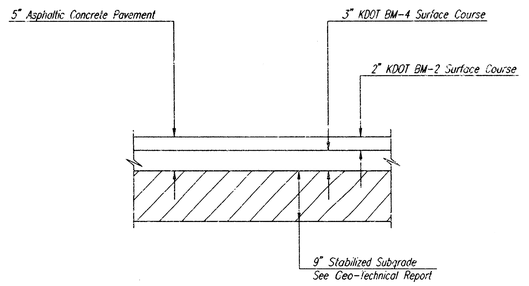

TYPICAL PAVING SECTION
PARKING LOT

GENERAL NOTES
INLET PROTECTION

1. INLET PROTECTION METHOD MAY BE ANY OF THE APPLICABLE TYPES SHOWN, AT THE CONTRACTORS OPTION.

2. GRAVEL FILTER SHALL BE A DURABLE, WELL-GRADED SAND-GRAVEL OR CRUSHED STONE, MAXIMUM 1-1/2 IN. SIZE. AS AN ALTERNATE GRAVEL FILLED BAGS OF BURLAP OR OTHER FABRIC MAY BE USED. WHERE BAGS ARE USED, THE WIRE SCREEN, WHERE SHOWN, MAY BE OMITTED.

3. FILTER FABRIC, WHERE USED, SHALL BE RESISTANT TO ULTRAVIOLET LIGHT. MATERIALS MAY BE SUPPLIED BY THE FOLLOWING MANUFACTURERS:

MIRAFI, INC.	–	100X
HOECHST FIBERS INDUSTRIES	–	TREVIRA 1115
EXXON	–	TYPAR 3301 W

MATERIALS SUPPLIED BY THE ABOVE NAMED MANUFACTURERS SHALL BE ACCEPTED UPON VISUAL INSPECTION BY THE ENGINEER. OTHER COMPARABLE MATERIALS MAY BE USED IF APPROVED BY THE ENGINEER.

4. INLET PROTECTION SHALL BE ERECTED AS SOON AS THE STRUCTURE HAS BEEN BACKFILLED. MEASURES SHALL BE TAKEN TO PRECLUDE ENTRY OF SEDIMENT INTO THE STORM WATER SEWER SYSTEM DURING CONSTRUCTION OF THE STRUCTURE.

5. REMOVAL AND DISPOSAL OF ACCUMULATED SILT AND DEBRIS AND/OR REMOVAL AND RECONSTRUCTION OF INLET PROTECTION INSTALLATIONS SHALL BE PERFORMED THROUGHOUT THE PROJECT LIFE WHENEVER DEBRIS REACHES ONE-THIRD THE BARRIER HEIGHT, OR AS DEEMED NECESSARY BY THE ENGINEER. ULTIMATE REMOVAL AND DISPOSAL OF INLET PROTECTION AND DEBRIS WILL BE PERFORMED BY THE DEVELOPER.

PAVING AND DRAINAGE DETAILS

Professional Engineering Consultants, P.A
303 S. TOPEKA • WICHITA, KANSAS 67202
316-262-2691 • FAX 316-262-3003

Designed by	DRC	Checked by	
Drawn by	DEP	Date NOV., 1999	Job No. 99517

40 of 50 40 of