City of Wichita

Sedgwick County, Kansas

ARBY'S RESTAURANT

21ST STREET NORTH & RIDGE ROAD

PRIVATE PROJECT NO. 942 PPS (607861)

Storm Sewer Improvements

Sanitary Sewer Improvements

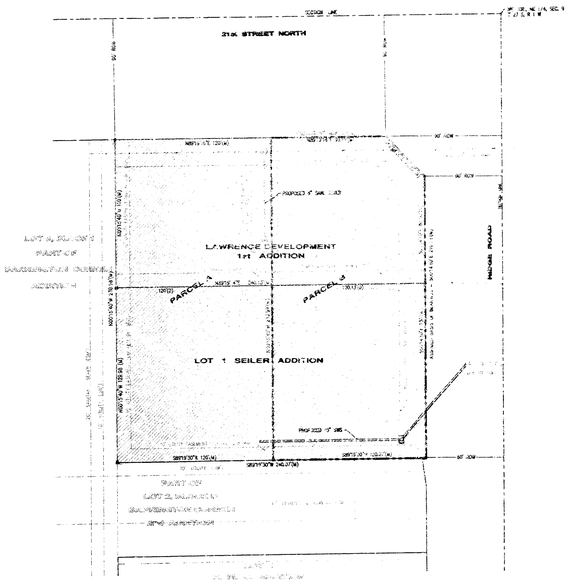

SANITARY SEWER BENEFIT DISTRICT AREA

PROPOSED ARBY'S LEASE BOUNDARY (PARCEL B)

KEY MAP

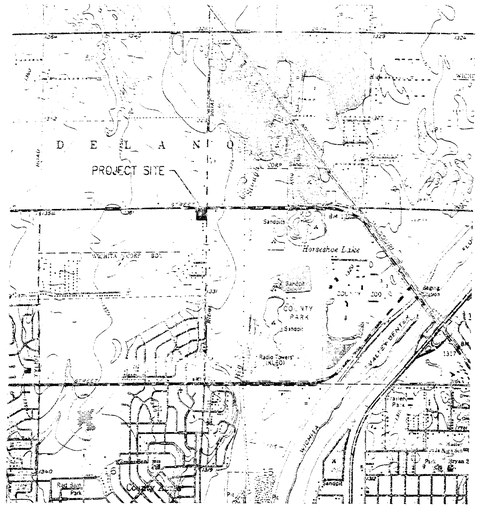

VICINITY MAP

NO SCALE

INDEX OF SHEETS:

TITLE SHEET	1
SANITARY SEWER PLAN & PROFILE	2
STANDARD TYPE 'P' MANHOLE DETAILS	3
STORM SEWER PLAN & PROFILE	4
STANDARD TYPE I CURB INLET DETAILS	5

AS-BUILT
Date: 3-22-00
Name: RT Loomis

STORM SEWER
ACCEPTED
5-31-00
D. Hunt
MS

APPROVED AS NOTED
BY CITY ENGINEERS OF WICHITA

SANITARY SEWERS VRH 12/13/99

STORM SEWERS VRH 12/13/99

DRIVEWAY APPROACHES _____

WATER MAINS _____

PAVING _____

NOTE TO CONTRACTORS

INSPECTION AND TESTING FOR THIS PROJECT ARE TO BE PROVIDED BY A LICENSED CONSULTING ENGINEERING FIRM UNDER CONTRACT WITH THE OWNER/DEVELOPER. SAID INSPECTION TO BE IN ACCORDANCE WITH THE CITY OF WICHITA STANDARD CONSTRUCTION ENGINEERING PRACTICE AND CERTIFIED BY A LICENSED PROFESSIONAL ENGINEER. NO WORK SHALL BE PERFORMED IN DEDICATED EASEMENTS OR PUBLIC RIGHT-OF-WAY BY THE CONTRACTOR WITHOUT SUCH INSPECTION, NOR SHALL ANY WORK BE COMMENCED WITHOUT WRITTEN AUTHORIZATION BY THE CITY ENGINEER.

CITY OF WICHITA PRIVATE PROJECT NO.:

San. Sew.
Booked
P-122
4-18-00
R. Loomis

NOVEMBER 1999

PLANS PREPARED BY:

YOUNG & ASSOCIATES, P.A.
Civil and Environmental Engineers
100 South Georgie * Derby, Kansas * 67037

FILE: 063\SSTITLE.dwg PLOT: 11-29-99 SCALE: 1"=200' ACADWH r14

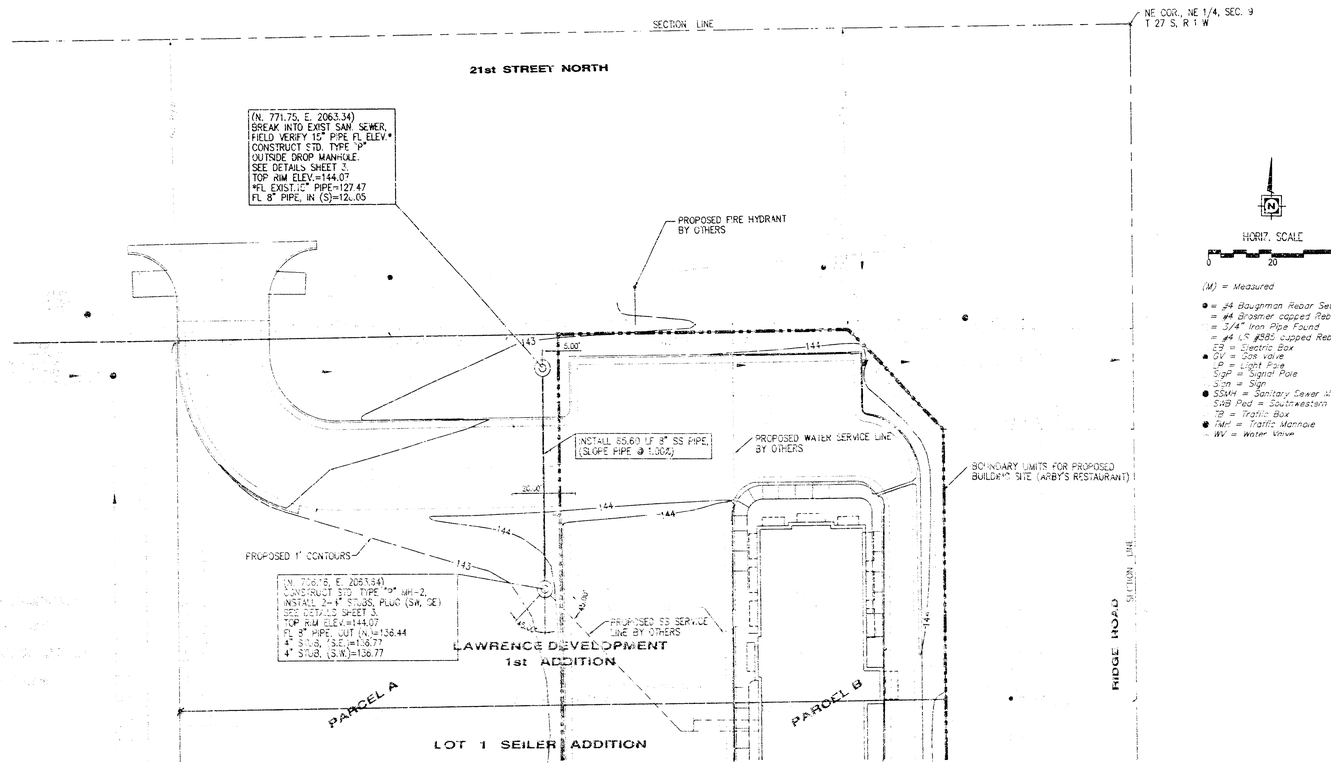

(M) = Measured

- = #4 Baughman Rebar Set
= #4 Brosmer capped Rebar Found
= 3/4" Iron Pipe Found
= #4 LS #886 capped Rebar Found
EB = Electric Box
GV = Gas Valve
LP = Light Pole
SigP = Signal Pole
Sign = Sign
SSMH = Sanitary Sewer Manhole
SWP Ped = Southwestern Bell Pedestal
TB = Traffic Box
Traf = Traffic Manhole
WV = Water Valve

GENERAL NOTES

1. ALL ELEVATIONS SHOWN ARE CITY DATUM.
2. AT LEAST 72 HOURS PRIOR TO BEGINNING ANY EXCAVATION (EXCLUDING WEEKENDS AND HOLIDAYS), THE CONTRACTOR SHALL CONTACT THE KANSAS ONE-CALL SYSTEM, A UTILITY LOCATION SERVICE, AT (316) 687-2470 TO REQUEST THE LOCAL UTILITY COMPANIES TO LOCATE ANY EXISTING LINES WITHIN THE PROJECT AREA.
3. THE SANITARY SEWER LINES SHALL BE INSTALLED IN ACCORDANCE WITH CITY OF WICHITA STANDARD SPECIFICATIONS, FOR THE "INSTALLATION OF WATER DISTRIBUTION SYSTEMS", NO. 145333. THE CONTRACTOR SHALL MAINTAIN A STATUTORY, PERFORMANCE, AND MAINTENANCE BOND FOR THE PROJECT.
4. THE CONTRACTOR MUST NOTIFY THE FOLLOWING IN CASE OF AN EMERGENCY:

CITY OF WICHITA SEWER & STORM WATER DEPARTMENT	268-4341
CITY OF WICHITA WATER DEPARTMENT	268-4555
PEOPLES NATURAL GAS COMPANY	942-8811
KANSAS GAS SERVICE	832-3122
K.C. & E.	261-6824

5. THE CONTRACTOR IS TO VERIFY UTILITY LOCATIONS PRIOR TO CONSTRUCTION OF THE PROJECT.
6. EASEMENTS AND RIGHT-OF-WAY PROVIDED BY THE OWNER FOR THE PROJECT ARE SHOWN IN THE PLANS. THE CONTRACTOR SHALL BE RESPONSIBLE FOR THE ACQUISITION OF ANY ADDITIONAL TEMPORARY CONSTRUCTION EASEMENTS OR RIGHT-OF-WAY THAT HE DESIRES TO USE IN COMPLETING THE WORK.
7. POSITIVE DRAINAGE SHALL BE PROVIDED FOR ALL AREAS ON OR NEAR SPOIL AREAS. NATURAL DRAINAGE WAYS SHALL BE MAINTAINED.
8. ANY EXCESS EXCAVATION WHICH IS TO BE WASTED, SHALL BE DISPOSED OF ON SITES PROVIDED BY THE CONTRACTOR. THESE SITES SHALL BE APPROVED BY THE ENGINEER AS TO SUITABILITY, APPEARANCE, AND SITE LOCATION, AND SHALL BE DISPOSED OF IN ACCORDANCE WITH THE PROVISIONS OF THE KANSAS SOLID WASTE MANAGEMENT STATUTES AND REGULATIONS (KSA 65-3401, KAR 28-29-1 ET SEQ.)
9. THE CONTRACTOR WILL BE REQUIRED TO WORK AROUND EXISTING UTILITIES WITHIN THE RIGHT-OF-WAY WHICH DO NOT CONFLICT WITH THE PROPOSED CONSTRUCTION.
10. IF ALTERATIONS TO THE SANITARY SEWER LINE ARE REQUIRED BECAUSE OF UTILITY CONFLICTS, THE CONTRACTOR SHALL NOTIFY AND PROVIDE THE ENGINEER WITH THE EXACT LOCATION OF THE CONFLICT SO ANY PLAN MODIFICATIONS ARE MADE.
11. ALL AREAS DISTURBED BY CONSTRUCTION INCLUDING STAGING AREAS, SHALL BE REPLANTED WITH FESCUE, AT THE FOLLOWING RATES:
    SEED APPLICATION = 1 LB/1,000 SQ. FT.
    FERTILIZER APPLICATION (N-P-K) = 12--24-12
    MULCH = PRAIRIE HAY
    MULCH APPLICATION = 90 LBS/1,000 SQ. FT.
12. EXISTING UTILITIES AND THEIR LOCATION, AS SHOWN ON THE PLANS, PRESENT THE BEST AVAILABLE INFORMATION. IT SHOULD BE NOTED THAT OTHER BURIED LINES AND CABLE MAY EXIST WHICH ARE NOT SHOWN ON THESE PLANS. THE CONTRACTOR SHALL EXERCISE EXTREME CAUTION DURING TRENCHING OPERATIONS TO AVOID DAMAGING THESE LINES AND CABLES. ANY UTILITIES DAMAGED SHALL BE REPLACED OR REPAIRED IMMEDIATELY AS DIRECTED BY THE ENGINEER AT THE CONTRACTOR'S EXPENSE. THE CONTRACTOR SHALL PROTECT FROM DAMAGE AND SUPPORT EXISTING UTILITIES THROUGH CONSTRUCTION AS APPROVED BY THE UTILITY OWNER AND THE ENGINEER AT THE CONTRACTOR'S EXPENSE.
13. THE CONTRACTOR SHALL BE RESPONSIBLE FOR PRESERVING EXISTING PROPERTY IRONS AND RIGHT-OF-WAY MONUMENTS AS SHOWN ON THE PLANS. THE CONTRACTOR SHALL BE REQUIRED TO REESTABLISH ANY PROPERTY IRONS OR RIGHT-OF-WAY MONUMENTS WHICH ARE DAMAGED OR DESTROYED BY HIS CONSTRUCTION OPERATIONS. SUCH IRONS OR MONUMENTS SHALL BE REESTABLISHED BY A LICENSED LAND SURVEYOR IN ACCORDANCE WITH STATE LAWS.
14. THE CONTRACTOR SHALL VERIFY HORIZONTAL AND VERTICAL LOCATION, TYPE, SIZE, AND GLASS OF EXISTING SANITARY SEWER PIPES PRIOR TO CONSTRUCTION. EXISTING SANITARY SEWER PIPE LOCATIONS AS SHOWN ON THE PLANS ARE APPROXIMATE. THE CONTRACTOR SHALL MAKE ADJUSTMENTS AS REQUIRED AND APPROVED BY THE ENGINEER. PROVISIONS FOR AND INSTALLATION OF PIPE ADAPTERS, SHORT SECTIONS OF PIPE, AND COUPLERS SHALL BE SUBSIDIARY TO OTHER PAY ITEMS OF WORK.
15. THE CONTRACTOR SHALL NOT START WORK ON THE PROJECT UNTIL THE PROJECT INSPECTOR IS ASSIGNED TO THE PROJECT AND IS PRESENT ON THE SITE. ANY WORK PERFORMED WITHOUT INSPECTION IS SUBJECT TO BE UNCOVERED FOR INSPECTION.

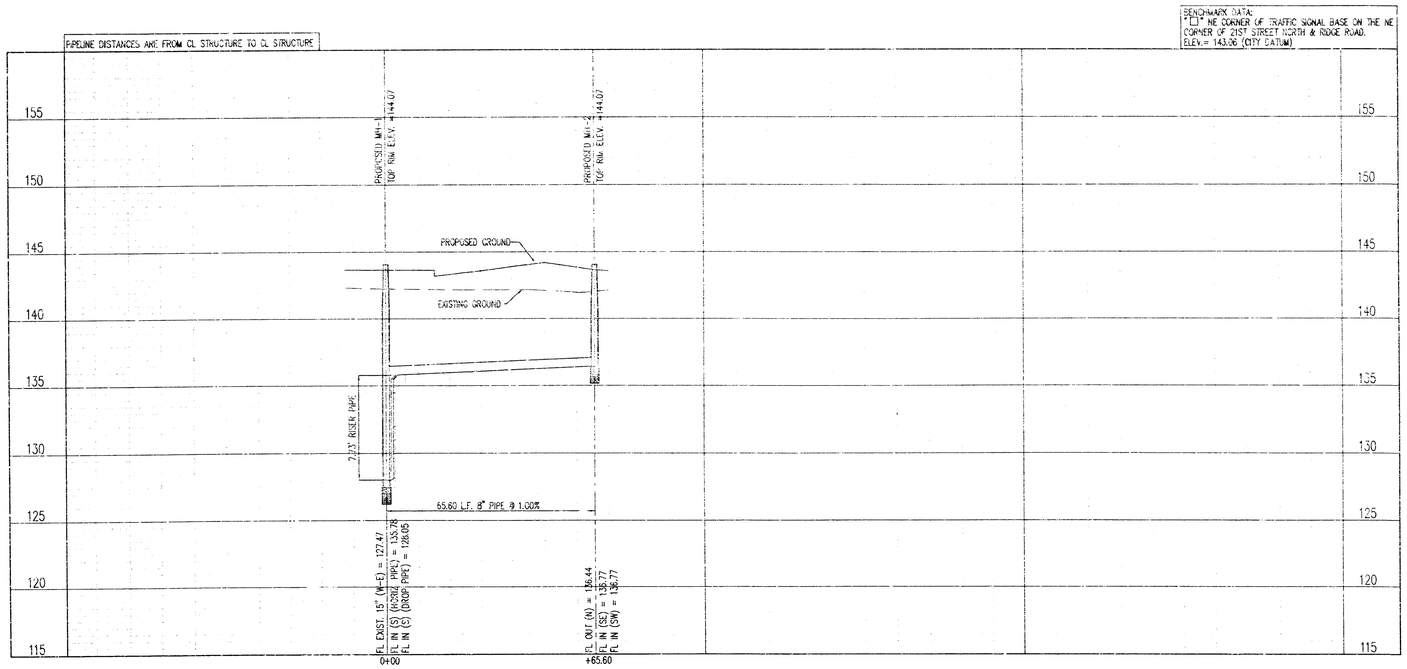

HORIZONTAL CONTROL INFORMATION

MONUMENT	NORTHING	EASTING
#4 REBAR W/ BAUGHMAN CAP NW COR. PARCEL B	781.79	2068.29
#4 REBAR W/ BAUGHMAN CAP SW COR. PARCEL B	541.80	2069.39
#4 REBAR W/ BAUGHMAN CAP SE COR. PARCEL B	543.22	2189.45

N 87° 42' 59" E
3.42.99
247.0850

FILE: 083\UTILPLN.dwg PLOT: 11-29-99 SCALE: 1"=20' ACADWIN-14

YOUNG & ASSOCIATES, PA
Civil and Environmental Engineers
130 South Georgie
Derby, Kansas 67037
Fax: (316) 788-4420

City of Wichita
Sedgwick County, Kansas

SANITARY SEWER PLAN AND PROFILE

Arby's-21st Street North and Ridge Road

City Proj. No.: 942 PPS (607861)	Engr.: CRY	Tech.: DAS, DIM
Y&A Proj. No.: 92-083	Scale: As Noted	
Date: November 1999	Sheet No. 2 of 4	

SEWER APPURTENANCES DETAILS

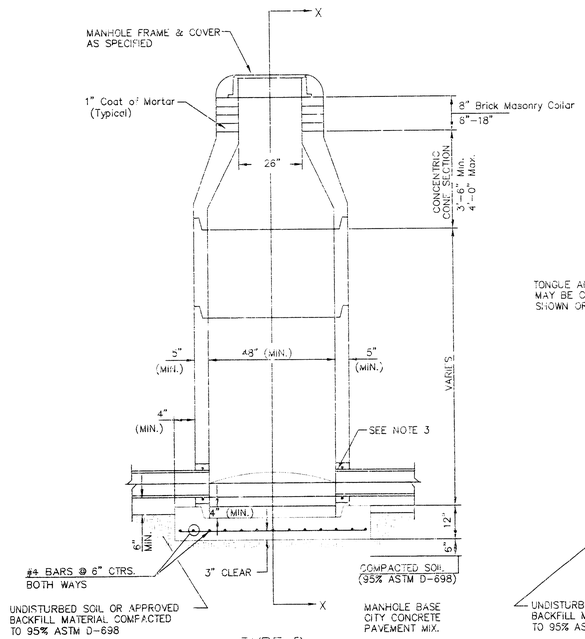

TYPE P
STANDARD MANHOLE

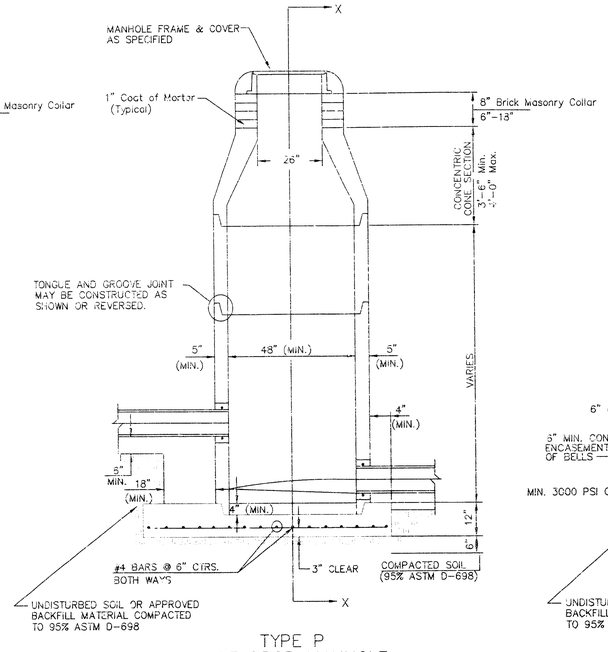

TYPE P
INSIDE DROP MANHOLE

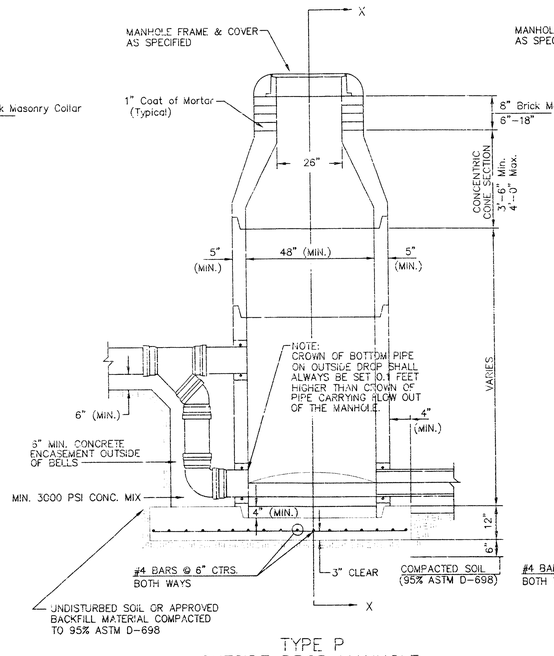

TYPE P
OUTSIDE DROP MANHOLE

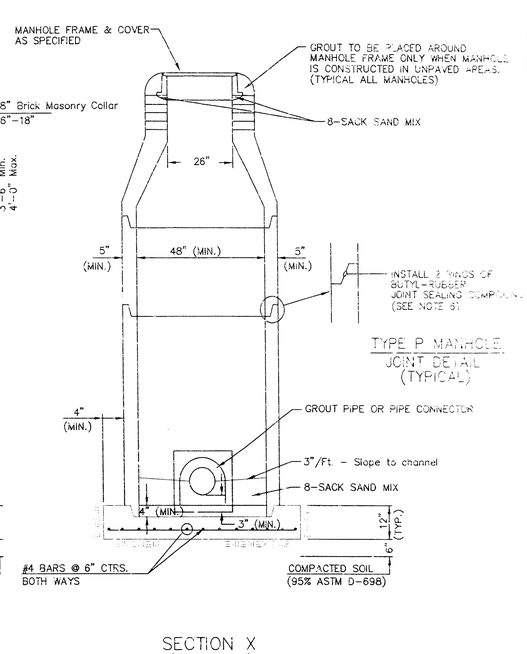

SECTION X
(TYPICAL)

GENERAL NOTES

PRECAST MANHOLE NOTES

1. ALL PRECAST CONCRETE MANHOLE SECTIONS SHALL CONFORM TO THE LATEST REVISIONS OF A.S.T.M. C478 AS MODIFIED BY THE SPECIFICATIONS.
2. NON-SHRINK GROUT SHALL BE NON-METALLIC TYPE.
3. APPROVED FLEXIBLE WATERSTOP GASKETS SHALL BE INSTALLED TO JOIN THE SEWER TO THE MANHOLE WALL WHEN A.B.S. COMPOSITE PIPE OR P.V.C. PIPE IS USED. FOR OTHER TYPES OF PIPE THE SEWER SHALL BE GROUTED IN PLACE WITH NON-SHRINK GROUT. THE SEWER PIPE SHALL BE SUPPORTED WITH CONCRETE ENCASEMENT A MINIMUM OF 3 FEET FROM THE MANHOLE WALL AND TO THE FIRST JOINT FOR V.C.P. SUCH THAT THE JOINT REMAINS FLEXIBLE.
4. ALL INSIDE SURFACES OF THE CONCRETE MANHOLE WHICH WOULD BE EXPOSED TO SEWER GAS SHALL BE COATED WITH 2 COATS INEMEC SERIES 66 HI-BUILD EPOXOLINE, DRY THICKNESS OF 8 MILS (MIN.)
5. EXTERIOR MANHOLE WALLS SHALL BE COATED WITH 1 COAT MOBILARMA 633 BITUMINOUS COATING.
6. JOINT SEALING COMPOUND SHALL BE KENT SEAL NO. 2 OR APPROVED EQUAL.
7. PRECAST MANHOLES SHALL BE SET AT LEAST 4 INCHES INTO THE MANHOLE BASE.
8. TOP OF MANHOLE FLOOR SLAB SHALL BE AT LEAST 3 INCHES BELOW THE FLOW LINE OF THE OUTLET PIPE TO INSURE SUFFICIENT MINIMUM THICKNESS OF SHAPED INVERT.
9. LIFTING HOLES SHALL BE FILLED WITH NON-SHRINK GROUT AND THE INTERIOR SURFACE COATED AS SPECIFIED.
10. MORTAR USED IN MASONRY CONSTRUCTION SHALL CONTAIN 8 SACKS OF CEMENT PER CUBIC YARD. CONCRETE USED IN MANHOLE BASES SHALL CONFORM TO THE REQUIREMENTS OF CONCRETE FOR CONCRETE PAVEMENT CONSTRUCTION AS SPECIFIED IN THE CITY STANDARD PAVING SPECIFICATIONS USING CITY CONCRETE PAVEMENT MIX WITHOUT AIR ENTRAINING ADMIXTURE. MORTAR SHALL BE PLACED AROUND THE MANHOLE RING AS SHOWN ON THE DRAWINGS WHEN MANHOLES ARE CONSTRUCTED IN UNPAVED AREAS. MANHOLES CONSTRUCTED WHERE PIPE SIZES ARE SMALLER THAN 24" SHALL HAVE AN INSIDE DIAMETER OF 4'. MANHOLES CONSTRUCTED WHERE PIPE SIZES ARE 24" OR LARGER SHALL HAVE AN INSIDE DIAMETER OF 5'. COMPLETED MANHOLE SHALL BE WITHOUT LEAKS AND WATER TIGHT.
11. REINFORCING STEEL SHALL BE INSTALLED IN THE MANHOLE BASES AND SHALL CONSIST OF NO. 4 BARS PLACED ON 6" CENTERS IN BOTH DIRECTIONS. THE MANHOLE BASE REINFORCEMENT SHALL BE PLACED AT LEAST 3" ABOVE THE BOTTOM OF THE MANHOLE BASE. ALL COSTS FOR FURNISHING AND INSTALLING REINFORCING STEEL SHALL BE INCLUDED IN THE UNIT PRICE BID FOR THE MANHOLE.
12. OPENINGS SHALL BE CUT INTO THE MANHOLE WALL WHEN OUTSIDE DROPS ARE CONSTRUCTED ON EXISTING MANHOLES. SUCH OPENINGS CUT INTO EXISTING MANHOLES SHALL BE AS SMALL AS PRACTICAL TO FACILITATE INSTALLING AND GROUTING THE NEW PIPE IN PLACE. WATERSTOP GASKETS SHALL BE USED WITH P.V.C. AND A.B.S. COMPOSITE PIPE. THE NEW PIPE SHALL BE GROUTED INTO THE OPENING USING AN APPROVED NONSHRINK GROUT FOR THE FULL MANHOLE WALL THICKNESS. THE EXTERIOR OF THE COMPLETED CONNECTION SHALL BE SEALED WITH AN APPROVED BITUMINOUS COATING SUCH THAT THE CONNECTION WILL BE WATER TIGHT. FLOOR OF MANHOLE SHALL BE MODIFIED TO FORM NEW FLOW CHANNEL FOR THE NEW CONNECTION AS INDICATED BY THE DRAWING. THIS WORK, INCLUDING MODIFICATION OF MANHOLE FLOOR, SHALL BE PAID FOR AT THE UNIT PRICE BID FOR OUTSIDE DROP STACK CONSTRUCTED ON EXISTING MANHOLE.
13. THE FLOORS OF ALL MANHOLES SHALL BE SHAPED WITH FLOW CHANNELS SUCH THAT THE MANHOLES WILL BE SELF CLEANING AND FREE OF AREAS WHERE SOLIDS COULD BE DEPOSITED AS SEWAGE FLOWS THROUGH THE MANHOLE FROM ALL INLET PIPES TO THE OUTLET PIPE. FLOW CHANNELS SHALL BE FORMED TO MATCH THE BOTTOM HALVES OF THE INFLOWING PIPES AND THE OUTFLOWING PIPE AS SHOWN BY THE DRAWINGS EXCEPT FOR INSIDE DROP MANHOLES. FLOW CHANNELS FOR INSIDE DROP MANHOLES SHALL BE CONSTRUCTED AS INDICATED BY THE DRAWING. MANHOLE FLOORS SHALL HAVE SLOPES OF 3 INCHES PER FOOT IN THE AREAS OUTSIDE OF THE FLOW CHANNELS SLOPED TOWARD THE FLOW CHANNELS. PIPES LAID THROUGH MANHOLES SHALL HAVE THE TOP HALF REMOVED TO NEAT LINES FOR THE FULL INSIDE DIAMETER OF THE MANHOLE. MANHOLE FLOORS SHALL THEN BE SHAPED AROUND THE BOTTOM HALF OF THE PIPE WHICH FORMS THE FLOW CHANNEL.
14. PIPES INSTALLED WITHIN THE EXCAVATION MADE FOR THE MANHOLE SHALL BE CRADLED WITH CONCRETE TO THE LIMITS OF THE MANHOLE EXCAVATION. WHEN CLAY PIPE IS USED, THE CRADLE SHALL EXTEND TO THE FIRST JOINT OUTSIDE THE MANHOLE. THE CRADLE SHALL BE TERMINATED AT THE CLAY PIPE JOINT IN A MANNER WHICH WILL MAINTAIN THE FLEXIBILITY OF THE JOINT. COST OF CRADLE WITHIN MANHOLE EXCAVATION OR TO CLAY PIPE JOINTS ADJACENT TO MANHOLE SHALL BE INCLUDED IN THE UNIT PRICE BID FOR THE MANHOLE.
15. MANHOLE COVER CASTINGS AND MANHOLE FRAME CASTINGS SHALL CONFORM TO THE REQUIREMENTS AS INDICATED IN THE STANDARD SPECIFICATIONS AND AS SHOWN IN THE STANDARD DETAIL DRAWING.
16. THE VERTICAL DROP IN INSIDE DROP MANHOLES SHALL NOT EXCEED 2' FOR INFLOWING PIPES SIZED 12" OR SMALLER AND 2' FOR INFLOWING PIPES LARGER THAN 12". THE CROWNS OF INFLOWING PIPES SHALL NEVER BE SET LOWER THAN THE CROWN OF THE OUTFLOWING PIPE.
17. STANDARD MANHOLES AND STANDARD INSIDE DROP MANHOLES SHALL BE BID AS STANDARD MANHOLES FOR THE TYPE AND DIAMETER INDICATED. OUTSIDE DROP MANHOLES SHALL BE BID AS STANDARD OUTSIDE DROP MANHOLES FOR THE TYPE AND DIAMETER INDICATED. ALL MANHOLE DIAMETERS WILL BE 4' UNLESS INDICATED OTHERWISE.
18. A BRICK MASONRY COLLAR SHALL BE INSTALLED BETWEEN THE CAST IRON FRAME AND THE CONCENTRIC CONE. THE COLLAR WILL HAVE 8" WALLS AND A VERTICAL HEIGHT OF 6" MINIMUM AND 18" MAXIMUM. A 1" COAT OF MORTAR WILL BE PLASTERED ON THE OUTSIDE OF THE COLLAR. THE USE OF PRE-CAST CONCRETE SPACERS FOR MANHOLE TOP ADJUSTMENT IS ALSO ALLOWED.

THE CITY OF WICHITA

CITY ENGINEER'S OFFICE
CITY HALL - 7TH FLOOR
455 NORTH MAIN STREET
WICHITA, KANSAS 67202
(316) 268-4502
(316) 268-4114 FAX

STANDARD TYPE 'P' MANHOLES

M. E. LINDEBAK P.E. - CITY ENGINEER

PROJECT NUMBER	INDEX CODE
942 DPS (607861)	XXXXXX
DATE: MAR 95	SHEET 3 OF 5

FILE: 003\SS\PMH.dwg PLOT: 11-29-99 SCALE: 1"=20' AC-ADWN r.14

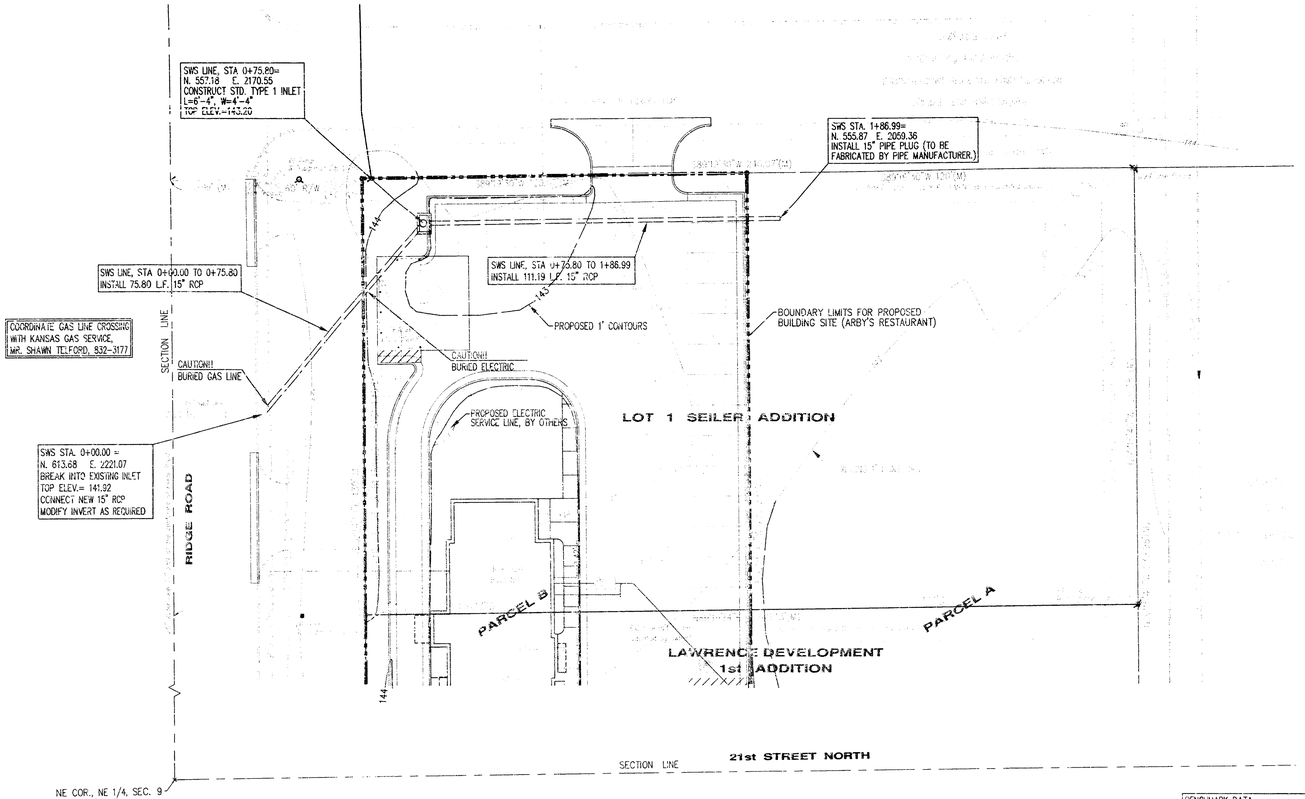

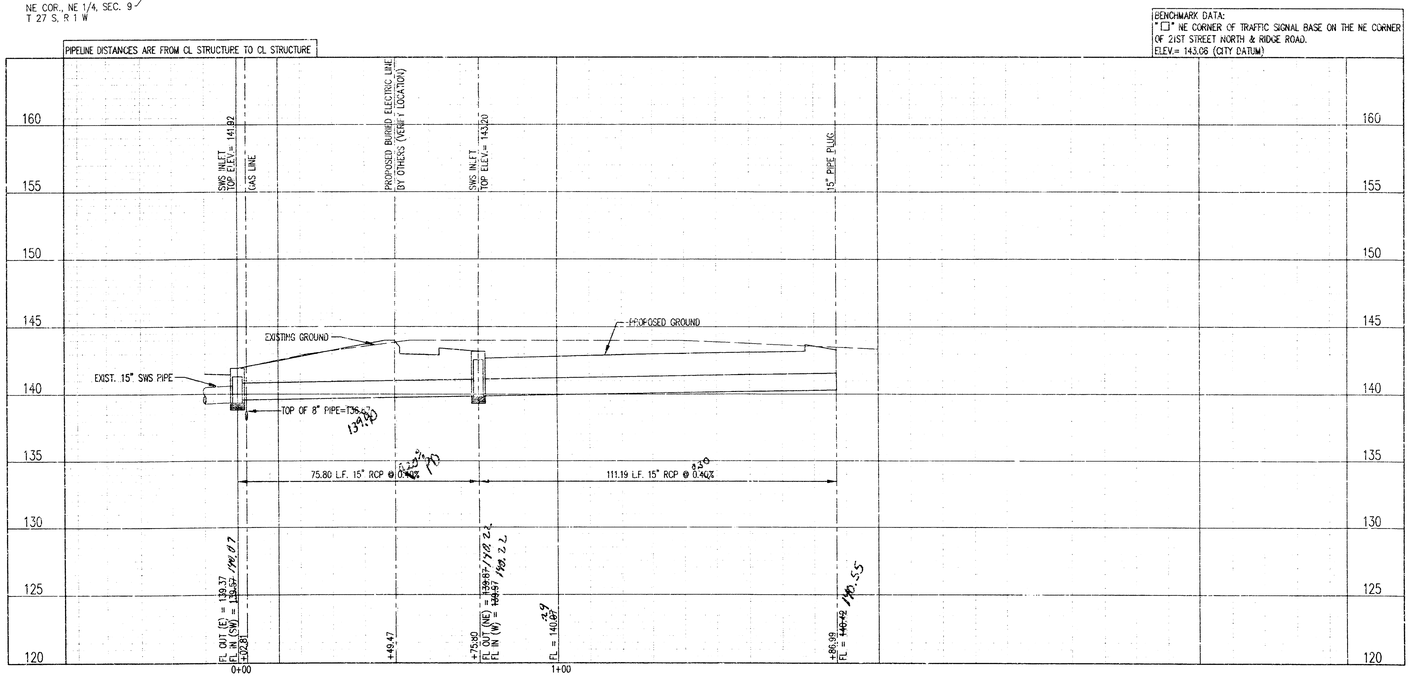

HORIZ. SCALE 0 20 40

VERT. SCALE 5 0

(M) = Measured

- ● = #4 Boughman Rebar Set
- = #4 Brasmer capped Rebar Found
- = 3/4" Iron Pipe Found
- = #4 LS #883 capped Rebar Found
- EB = Electric Box
- ● GV = Gas Valve
- LP = Light Pole
- SigP = Signal Pole
- Sign = Sign
- ● SMH = Sanitary Sewer Manhole
- SWB Ped = Southwestern Bell Pedestal
- TB = Traffic Box
- ● TMH = Traffic Manhole
- WV = Water Valve

GENERAL NOTES

1. ALL ELEVATIONS SHOWN ARE CITY DATUM.
2. AT LEAST 72 HOURS PRIOR TO BEGINNING ANY EXCAVATION (EXCLUDING WEEKENDS AND HOLIDAYS), THE CONTRACTOR SHALL CONTACT THE KANSAS ONE-CALL SYSTEM, A UTILITY LOCATION SERVICE, AT (316) 687-2470 TO REQUEST THE LOCAL UTILITY COMPANIES TO LOCATE ANY EXISTING LINES WITHIN THE PROJECT AREA.
3. THE STORM SEWER LINES SHALL BE INSTALLED IN ACCORDANCE WITH CITY OF WICHITA STANDARD SPECIFICATIONS, FOR THE 'INSTALLATION OF STORM SEWERS', NO. 145333.
4. THE CONTRACTOR MUST NOTIFY THE FOLLOWING IN CASE OF AN EMERGENCY:

CITY OF WICHITA SEWER & STORM WATER DEPARTMENT	268-4341
CITY OF WICHITA WATER DEPARTMENT	268-4555
PEOPLES NATURAL GAS COMPANY	942-8811
KANSAS GAS SERVICE	832-3122
K.G. & E.	261-6824

5. THE CONTRACTOR IS TO VERIFY UTILITY LOCATIONS PRIOR TO CONSTRUCTION OF THE PROJECT.
6. EASEMENTS AND RIGHT-OF-WAY PROVIDED BY THE OWNER FOR THE PROJECT ARE SHOWN IN THE PLANS. THE CONTRACTOR SHALL BE RESPONSIBLE FOR THE ACQUISITION OF ANY ADDITIONAL TEMPORARY CONSTRUCTION EASEMENTS OR RIGHT-OF-WAY THAT HE DESIRES TO USE IN COMPLETING THE WORK.
7. POSITIVE DRAINAGE SHALL BE PROVIDED FOR ALL AREAS ON OR NEAR SPOIL AREAS. NATURAL DRAINAGE WAYS SHALL BE MAINTAINED.
8. ANY EXCESS EXCAVATION WHICH IS TO BE WASTED, SHALL BE DISPOSED OF ON SITES PROVIDED BY THE CONTRACTOR. THESE SITES SHALL BE APPROVED BY THE ENGINEER AS TO SUITABILITY, APPEARANCE, AND SITE LOCATION, AND SHALL BE DISPOSED OF IN ACCORDANCE WITH THE PROVISIONS OF THE KANSAS SOLID WASTE MANAGEMENT STATUTES AND REGULATIONS (KSA 65-3401, KAR 28-29-1 ET SEQ.)
9. THE CONTRACTOR WILL BE REQUIRED TO WORK AROUND EXISTING UTILITIES WITHIN THE RIGHT-OF-WAY WHICH DO NOT CONFLICT WITH THE PROPOSED CONSTRUCTION.
10. IF ALTERATIONS TO THE STORM SEWER LINES ARE REQUIRED BECAUSE OF UTILITY CONFLICTS, THE CONTRACTOR SHALL NOTIFY AND PROVIDE THE ENGINEER WITH THE EXACT LOCATION OF THE CONFLICT SO ANY PLAN MODIFICATIONS ARE MADE.
11. ALL AREAS DISTURBED BY CONSTRUCTION INCLUDING STAGING AREAS, SHALL BE REPLANTED WITH FESCUE, AT THE FOLLOWING RATES:

    SEED APPLICATION = 1 LB/1,000 SQ. FT.
    FERTILIZER APPLICATION (N-P-K) = 12-24-12
    MULCH = PRAIRIE HAY
    MULCH APPLICATION = 90 LBS/1,000 SQ. FT.

12. EXISTING UTILITIES AND THEIR LOCATION, AS SHOWN ON THE PLANS, PRESENT THE BEST AVAILABLE INFORMATION. IT SHOULD BE NOTED THAT OTHER BURIED LINES AND CABLE MAY EXIST WHICH ARE NOT SHOWN ON THESE PLANS. THE CONTRACTOR SHALL EXERCISE EXTREME CAUTION DURING TRENCHING OPERATIONS TO AVOID DAMAGING THESE LINES AND CABLES. ANY UTILITIES DAMAGED SHALL BE REPLACED OR REPAIRED IMMEDIATELY AS DIRECTED BY THE ENGINEER AT THE CONTRACTOR'S EXPENSE. THE CONTRACTOR SHALL PROTECT FROM DAMAGE AND SUPPORT EXISTING UTILITIES THROUGH CONSTRUCTION AS APPROVED BY THE UTILITY OWNER AND THE ENGINEER AT THE CONTRACTOR'S EXPENSE.
13. THE CONTRACTOR SHALL BE RESPONSIBLE FOR PRESERVING EXISTING PROPERTY IRONS AND RIGHT-OF-WAY MONUMENTS AS SHOWN ON THE PLANS. THE CONTRACTOR SHALL BE REQUIRED TO REESTABLISH ANY PROPERTY IRONS OR RIGHT-OF-WAY MONUMENTS WHICH ARE DAMAGED OR DESTROYED BY HIS CONSTRUCTION OPERATIONS. SUCH IRONS OR MONUMENTS SHALL BE REESTABLISHED BY A LICENSED LAND SURVEYOR IN ACCORDANCE WITH STATE LAWS.
14. THE CONTRACTOR SHALL VERIFY HORIZONTAL AND VERTICAL LOCATION, TYPE, SIZE, AND CLASS OF EXISTING STORM WATER PIPES PRIOR TO CONSTRUCTION. EXISTING STORM SEWER LINE LOCATIONS AS SHOWN ON THE PLANS ARE APPROXIMATE. THE CONTRACTOR SHALL MAKE ADJUSTMENTS AS REQUIRED AND APPROVED BY THE ENGINEER. PROVISIONS FOR AND INSTALLATION OF PIPE ADAPTERS, SHORT SECTIONS OF PIPE, AND COUPLERS SHALL BE SUBSIDIARY TO OTHER PAY ITEMS OF WORK.
15. THE CONTRACTOR SHALL NOT START WORK ON THE PROJECT UNTIL THE PROJECT INSPECTOR IS ASSIGNED TO THE PROJECT AND IS PRESENT ON THE SITE. ANY WORK PERFORMED WITHOUT INSPECTION IS SUBJECT TO BE UNCOVERED FOR INSPECTION.

HORIZONTAL CONTROL INFORMATION

MONUMENT	NORTHING	EASTING
#4 REBAR W/ BAUGHMAN CAP NW COR. PARCEL B	781.79	2068.29
#4 REBAR W/ BAUGHMAN CAP SW COR. PARCEL B	541.80	2069.39
#4 REBAR W/ BAUGHMAN CAP SE COR. PARCEL B	543.22	2189.45

AS-BUILT
Date: 1-25-00
Signed: [illegible]

YOUNG & ASSOCIATES, PA
Civil and Environmental Engineers
100 South Georgie
Derby, Kansas 67037
Tel: (316) 788-2552
Fax: (316) 788-4418

City of Wichita
Sedgwick County, Kansas

15" STORM SEWER PLAN AND PROFILE

Arb.'s-21st Street North and Ridge Road

City Proj. No.: 942 PPS (60786.)	Engr.: CRY	Tech.: DAS, DM
Y&A Proj. No.: 99-083	Scale: As Noted	
Date: November 1999	Sheet No. 4 of 5	

FILE: 083\SWS\SWSPP1.dwg PLOT: 11-29-99 SCALE: 1"=20' ACADWIN r.14

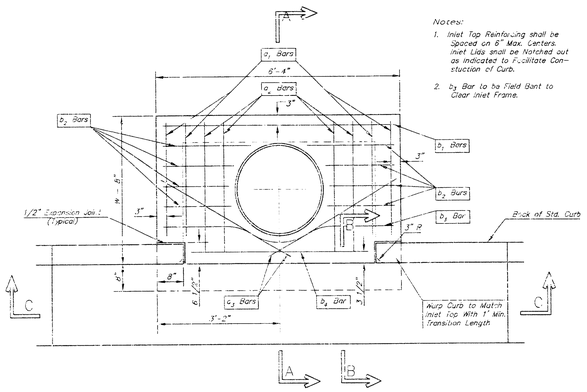

PLAN

Notes:

1. Inlet Top Reinforcing shall be Spaced on 6" Max. Centers. Inlet Lids shall be Notched out as Indicated to Facilitate Construction of Curb.
2. b_2 Bar to be Field Bent to Clear Inlet Frame.

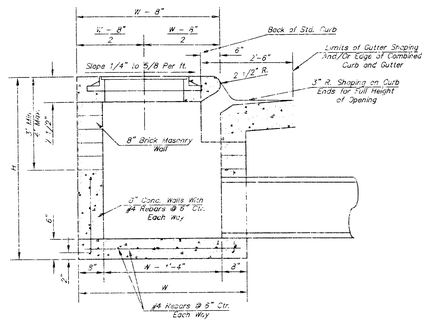

SECTION A-A

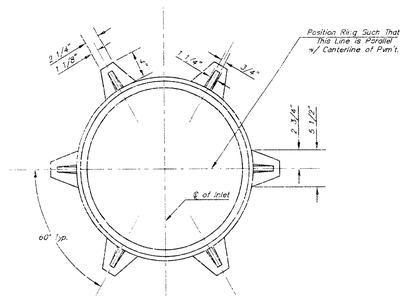

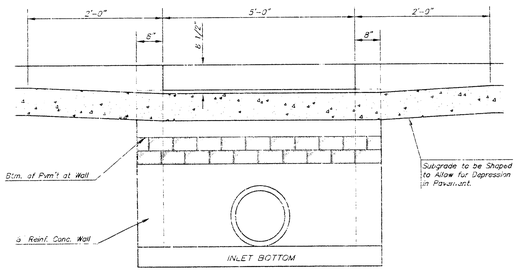

SECTION C-C

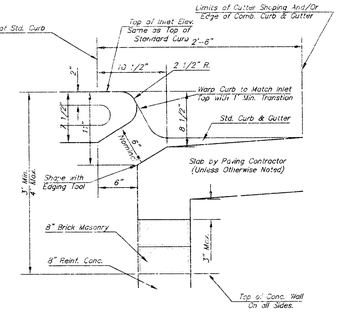

SECTION B-B

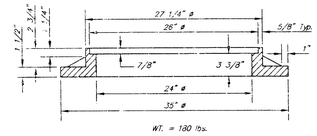

WT. = 180 lbs.

MANHOLE RING AND COVER

*See City of Wichita Standard Manhole Ring and Cover Detail Sheet for Cover Details to Be Used With Inlet Frame.

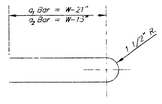

BENDING DIAGRAM

STEEL SCHEDULE

BAR		a_1	a_2	a_3	b_1					b_2	b_3	b_4	Wt. Lbs.
					W=4'-4"	W=5'-4"	W=6'-4"	W=7'-4"	W=8'-4"				
NUMBER		4	4	2	1	3	5	7	9	6	1	1	
SIZE		#4	#4	#4	#4	#4	#4	#4	#4	#4	#4	#6	
LENGTH	W=4'-4"	5'-7"	6'-7"	4'-0"	6'-1"	–	–	–	–	1'-9"	6'-2"	4'-8"	60±
	W=5'-4"	7'-7"	8'-7"	5'-0"	–	6'-1"	–	–	–	1'-9"	6'-2"	4'-8"	81±
	W=6'-4"	9'-7"	10'-7"	6'-0"	–	–	6'-1"	–	–	1'-9"	6'-2"	4'-8"	101±
	W=7'-4"	11'-7"	12'-7"	7'-0"	–	–	–	6'-1"	–	1'-9"	6'-2"	4'-8"	121±
	W=8'-4"	13'-7"	14'-7"	8'-0"	–	–	–	–	6'-1"	1'-9"	6'-2"	4'-8"	141±

Note: a_3 Bars to be Placed Approx. 2" Below Top of Inlet Cover.

STANDARD CURB INLET PRECAST TOPS

W	TYP. CAST TOP SIZE		PIPE SIZE	CU. YD. CONC.
4'-4"	5'-8"	6'-4" 7 1/2"	21" & SMALLER	0.38±
5'-4"	4'-8"	6'-4" 7 1/2"	24" & 30"	0.51±
6'-4"	5'-8"	6'-4" 7 1/2"	36" & 42"	0.64±
7'-4"	6'-8"	6'-4" 7 1/2"	48" & 54"	0.77±
8'-4"	7'-8"	6'-4" 7 1/2"	60" & 66"	0.90±

GENERAL NOTES

1. Concrete tops to be installed on thin mortar cushion to insure full support along brick walls. Concrete tops may be cast in place or precast. Concrete used for inlet construction shall be concrete pavement mix.
2. Contractor shall have the option of constructing 8" brick masonry walls between the concrete inlet base and top on this inlet when W=5'-4" and H=7'-0" or less.
3. Inlet invert shall be shaped with a sack sand mix concrete to create flow channels and to increase hydraulic efficiency such that the inlet will be self cleaning between all inlet and/or outlet pipes.
4. The ends of all pipes installed in inlets shall be cut off flush with the inside face of the inlet wall.

THE CITY OF WICHITA

CITY ENGINEER'S OFFICE
CITY HALL - SEVENTH FLOOR
455 NORTH MAIN STREET
WICHITA, KANSAS 67202
(316) 268-4501
(316) 268-4114 FAX

STANDARD TYPE I CURB INLET OPENING = 6" x 5' 0"

M. E. LINDEBAK P.E. - CITY ENGINEER

PROJECT NUMBER	INDEX CODE
942 PPS (607861)	XXXXXX
DATE: MAR 96	SHEET 5 OF 5

FILE: D83\SWS\STYPI-5.dwg PLOT: 11-29-99 SCALE: 1"=20' ACAD Wich. 14

18 03 01 18