STORM WATER SEWER TO SERVE

Builder's Third Addition

RESERVE J

Private Project Number

945 PPS (607861)

CITY OF WICHITA, KANSAS

Michael E. Lindebak, P.E. City Engineer

November 1999

Index

Title Sheet	1
Plan/Profile Sheet	2
Detail Sheet	3
Copy Of Plat	4

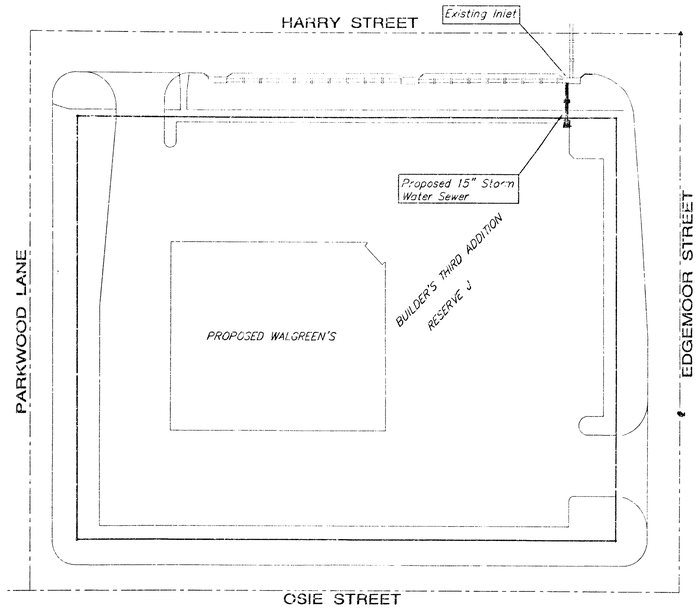

SCALE: 1" = 40'

Location Map

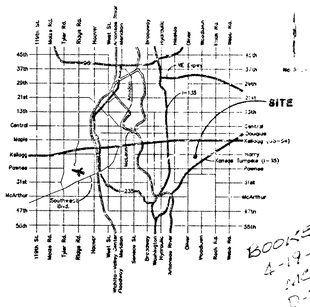

BOOKED 4-19-00 MCG D-368

General Notes

1. Contractor will be required to provide notice to utility companies a minimum of forty-eight (48) hours prior to any excavation, as follows:

   Kansas One-Call 687-2470

   The Contractor must notify the following in case of an emergency:

MultiMedia Cablevision	262-4270
Kansas Gas Service Company	383-8600
Kansas Gas & Electric Company	383-8650
Peoples Gas Company	942-7600
Southwestern Bell Telephone Company	1-571-2611
City of Wichita Water Department	268-4908
City of Wichita Sewer Department	268-4071

2. Utility service lines, poles, valve boxes, meters, et cetera are to be adjusted as necessary by others prior to construction unless the plans specifically call for their adjustment by the Contractor or unless the plans specifically identify a utility to be adjusted by its owner during construction. Existing utilities and their location, as shown on the plans represent the best information obtainable for design and shall be field verified. The contractor will be required to work around existing utilities within the right-of-way which do not conflict with proposed construction.

3. All disturbed areas not intended for pavement or sidewalk construction shall be seeded with Kansas Premium Fescue Blend at a rate of 8 lb./1000 Sq. Ft., fertilized with a 16-20-6 ratio at a rate of 4 lb./1000 Sq. Ft., and mulched with Prairie Hay at a rate of 92 lb./1000 Sq. Ft. Mulch shall be "potted" with forks or punched into soil to reduce loss due to wind.

4. Trees and shrubs in public right-of-way which are in **direct conflict with proposed new construction shall be** removed by the Contractor with the Engineer's approval. Trees and shrubs which are not in direct conflict with proposed new construction shall be saved and protected from damage.

5. Contractor shall not start work on the project until the project inspector is assigned to the project and is present on the site. Any work done without inspection will be required to be uncovered for inspection.

6. Rubble from the removal of miscellaneous structures and excess excavation which is to be wasted shall be disposed of on sites to be provided by the Contractor. These sites shall be approved by the Engineer as to suitability, appearance and site location. Locations that, in the opinion of the Engineer, will leave an unsightly appearance will not be approved. All disposal sites must be approved by the Kansas Department of Health and Environment. Material either stockpiled or disposed of in a flood plain would require a Kansas State Board of Agriculture permit. Any material dumped in waters of the United States or wetlands is subject to U.S. Corps. of Engineers permitting regulations. Any material buried or stockpiled beyond approved construction limits would require additional archaeological investigations unless buried in a previously approved borrow location.

7. Cuts made to paved surfaces on public property will be repaired by the City's contractor and charged against the owner/applicant. Unit repair prices are available from the City at 268-4418. A surcharge may be applicable: call 268-4418 for details. Repair costs to be paid prior to release of sewer service if sewer service is affected. Contractor shall obtain permit prior to construction.

APPROVED AS NOTED
BY CITY ENGINEER OF WICHITA

Storm Sewers VRH 11/15/99

NOTE TO CONTRACTORS

Installation, inspection and testing for the waterline is to be provided by a Licensed Consulting Engineering Firm under contract with the Owner/Developer. Said inspection to be in accordance with the City of Wichita standard construction engineering practices and certified by a Licensed Professional Engineer. No work shall be performed in dedicated easements or public right-of-way by the Contractor without such inspection nor shall any work be commenced without written authorization by the City Engineer. All Construction and Materials shall comply with the City of Wichita Specifications and Standards (on file and available in the City Engineer's Office).

Legal Description

Reserve J, in Replat of Reserve E, Builders Third Addition to Wichita, Kansas, Sedgwick County, Kansas.

Benchmark:

Railroad Spike Located in South side of Power Pole Located Northwest Corner of Site East of Existing Drive.

Elevation: 148.55 City Datum

LICENSED PROFESSIONAL ENGINEER KANSAS 11/11/99

PROJECT INSPECTED + ASBUILT BY BAUGHMAN COMPANY, P.A. 3/2000 JMN

BAUGHMAN COMPANY P.A.
ENGINEERING, SURVEYING, & PLANNING
316-262-7271 • 315 ELLIS • WICHITA, KANSAS 67211

10-4-1-14

LEGAL DESCRIPTION:

Reserve J, In Replat of Reserve E, Builders Third Addition to Wichita, Kansas, Sedgwick County, Kansas.

BENCHMARK:

Railroad Spike Located in South side of Power Pole Located Northwest Corner of Site Adjacent To Existing Drive.

Elevation: 148.55 City Datum

Sediment Barrier Detail

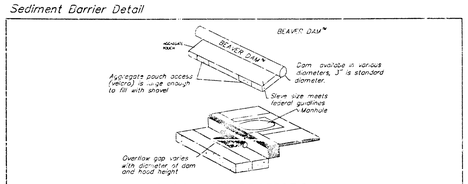

CURB INLET PROTECTION
DANDY PRODUCTS – BEAVER DAM

Note: A substitute to the "Dandy Bags" or the "Beaver Dam" must be comprobable and approved by the engineer in charge. For more information on the "Dandy Bag" and the "Beaver Dam" call Merideth Brothers, Inc., Suppliers of Dandy Products at 1-800-591-2284. Dandy Products or alternative to be paid per Each as Sediment Barriers.

No Scale

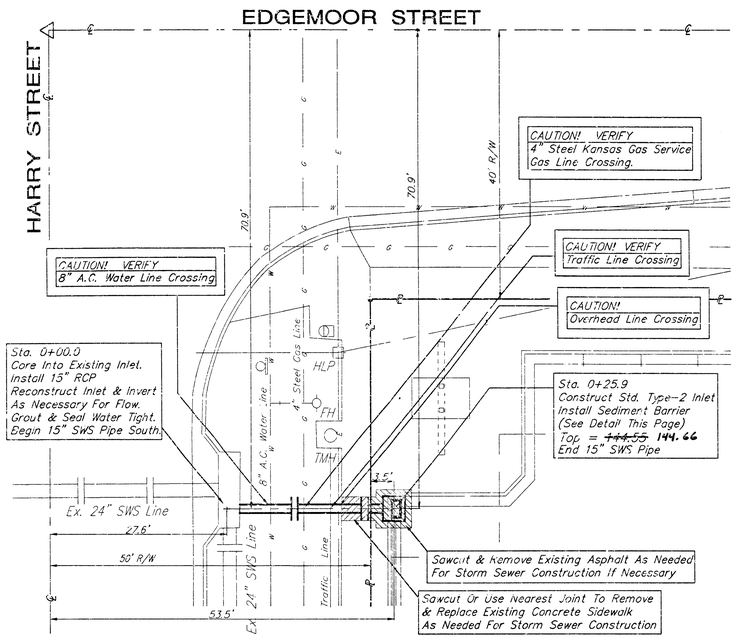

SCALE:
1" = 10' HORIZONTAL
1" = 5' VERTICAL

NOTE:
SWS Pipe Shall Be RCP

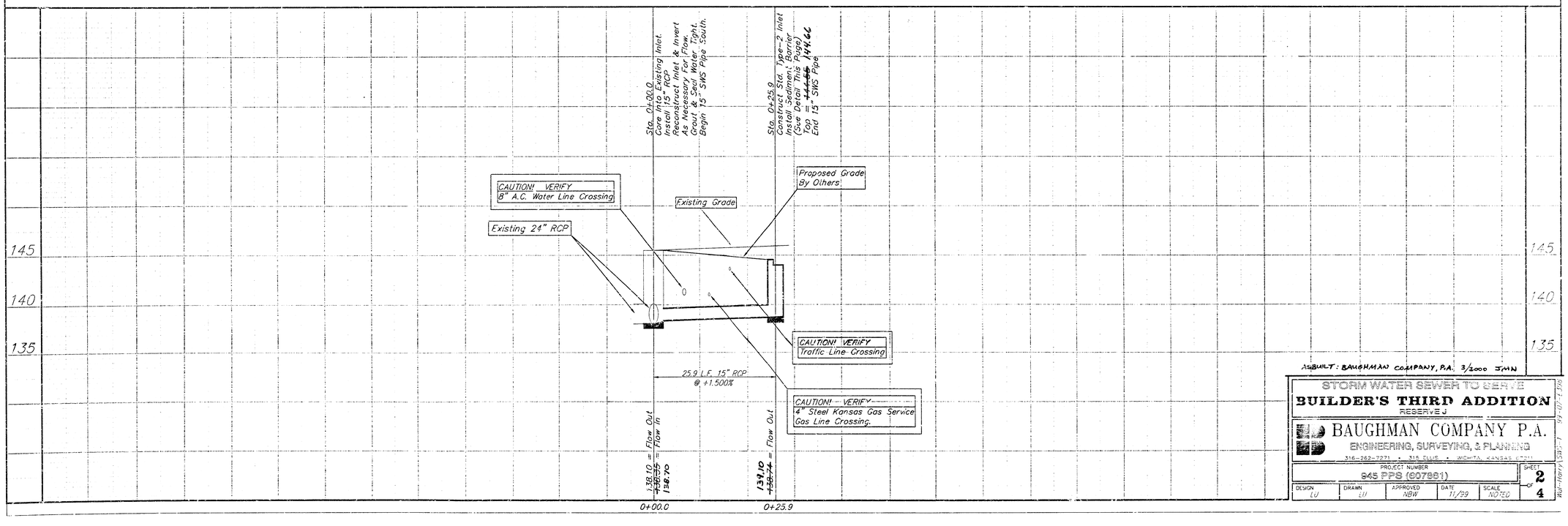

ASBUILT: BAUGHMAN COMPANY, P.A. 3/2000 JMN

STORM WATER SEWER TO SERVE
BUILDER'S THIRD ADDITION
RESERVE J

BAUGHMAN COMPANY P.A.
ENGINEERING, SURVEYING, & PLANNING
316-262-7271 • 315 ELLIS • WICHITA, KANSAS 67211

PROJECT NUMBER					SHEET
945 PPS (607861)					2 OF 4
DESIGN	DRAWN	APPROVED	DATE	SCALE	
LU	LU	NBW	11/99	NOTED	

Wal-Harry SWS-1 99-07-E396

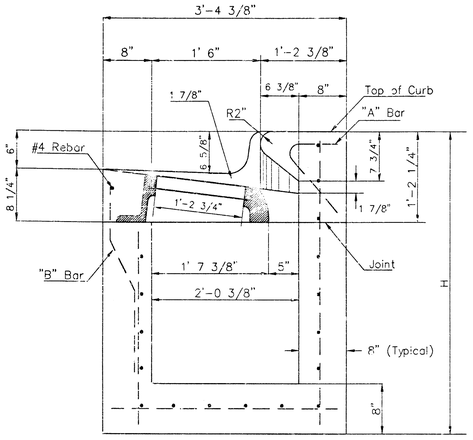

SECTION A-A

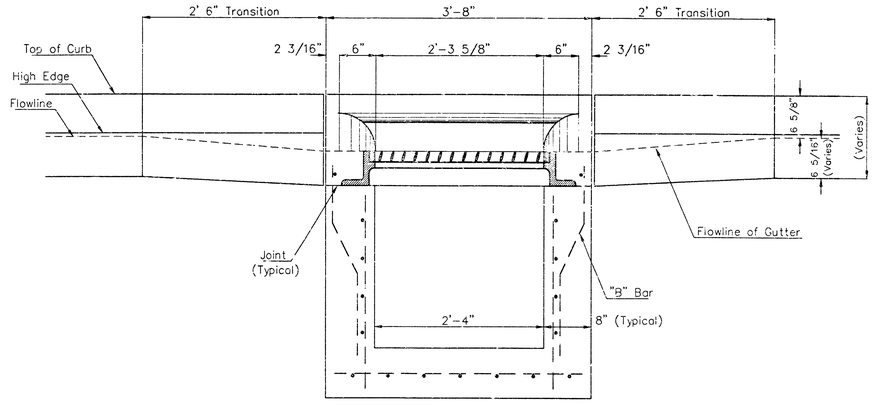

SECTION C-C

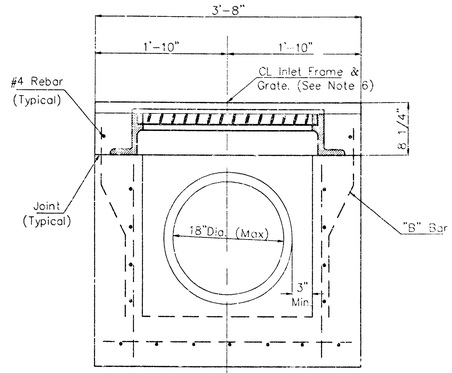

SECTION D-D

REAR WALL

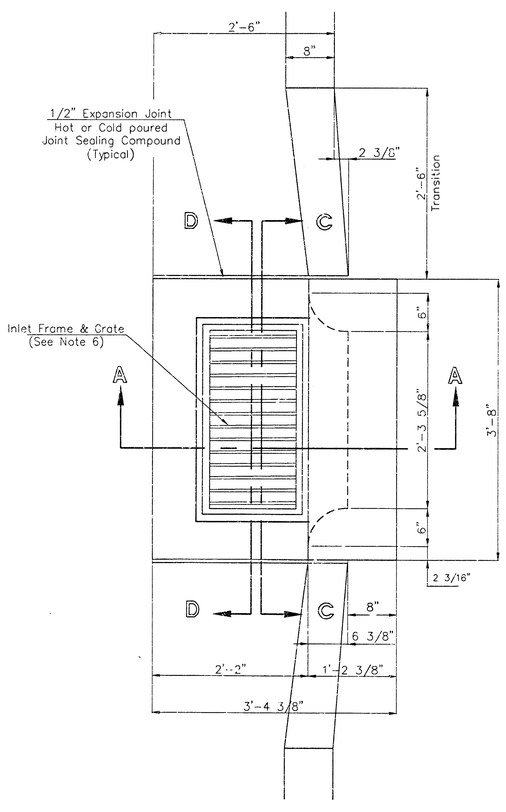

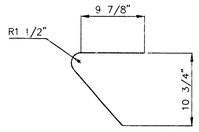

"A" Bar

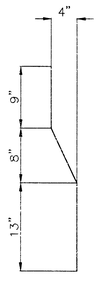

"B" Bar

General Notes

1. Use the concrete mix specified for the City of Wichita concrete pavement throughout. All exposed edges shall be finished with an edging tool. Reinforcing bars shall be bent around pipe.
2. Inlet invert shall be shaped with 8 sack mix concrete to create flow channels and to increase hydraulic efficiency such that the inlet will be self cleaning between all inlet and/or outlet pipes.
3. All bars are #4 with 6" spacing and shall have a minimum clearance of 1 1/2" inches unless otherwise noted on the plans.
4. When directed by the Engineer, a small opening may be required in the back of the inlet in order to drain a low area. Reinforcing bars will extend through the openings. No deductions in concrete quantities will be made for these openings.
5. No deductions will be made in pay length of curb, gutter, or curb and gutter through the inlet area.
6. Use Neenah R-3289 HV Single Inlet Frame and Grate or approved equal. Inlet frame to be proof load tested to 40,000 lbs. on unsupported side.
7. Reinforcing bars shall be cut or bent around pipes. No deduction in concrete quantities shall be made for pipe openings.
8. The vanes of the grate shall be oriented with respect to the flow arrows shown on the plans.

CITY OF WICHITA

STD. TYPE II CURB INLET

INLET OPENING = 8"X2'-3 5/8"

BAUGHMAN COMPANY P.A.

ENGINEERING, SURVEYING, & PLANNING

316-262-2771 • 315 ELLIS • WICHITA, KANSAS 67211

PROJECT NUMBER	SHEET
945 PPS (607881)	3 OF 4

DESIGN	DRAWN	APPROVED	DATE	SCALE
Staff	Staff		11/99	NONE

REPLAT OF RESERVE 'E'

BUILDER'S THIRD ADDITION

WICHITA, KANSAS.

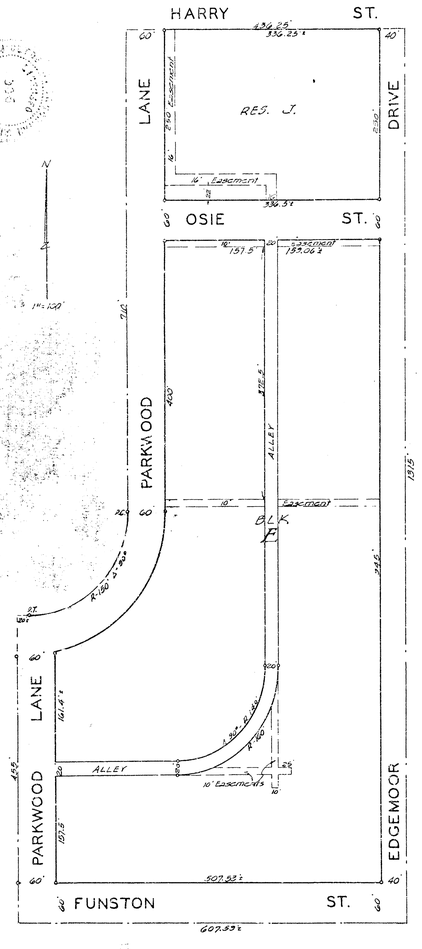

State of Kansas } S.S.
Sedgwick County }

I, Clyde M. Baughman, County Surveyor in and for said County and State do hereby certify that I have surveyed and platted "REPLAT OF RESERVE 'E', BUILDERS THIRD ADDITION" to Wichita, Kansas, and that the accompanying plat is a true and correct exhibit of said survey described as follows: Reserve 'E' as platted in said Builders Third Addition to Wichita, Kansas, and the west 40 feet of Edgemoor Drive adjoining said Reserve 'E' on the east, and all of Parkwood Lane adjoining said Reserve on the west, and all of Funston St. adjoining said Reserve 'E' on the south from the west line of said Parkwood Lane to the east line of that portion of Edgemoor Drive included in said plat.

Clyde M. Baughman Surveyor

Know all men by these presents that Builders Inc., a corporation by its Vice President W. W. Garvey and its Secretary R. E. Branson, have caused the land described in the surveyors certificate to be platted into a block, streets, alley and a reserve to be known as "REPLAT OF RESERVE 'E' BUILDERS THIRD ADDITION" to Wichita, Kansas. Easements are hereby granted as indicated on the plat for the construction and maintenance of public utilities. The streets and alley are hereby dedicated to and for the use of the public.

Builders Inc., a corporation by.

W. W. Garvey Vice President

R. E. Branson Secretary

State of Kansas } S.S.
Sedgwick County }

Be it remembered that on this 11th day of March 1950, before me a Notary Public in and for said County and State came Builders Inc., a corporation by its Vice President W. W. Garvey and its Secretary R. E. Branson, known to me to be the same persons who executed the foregoing instrument of writing and duly acknowledged the execution of the same as their voluntary act and deed and as the act and deed of said corporation. In testimony whereof I have hereunto set my hand and affixed my notarial seal the day and year above written.

Josephine Alexander Notary Public

My Commission Expires March 4, 1952

This plat of "REPLAT OF RESERVE 'E', BUILDERS THIRD ADDITION" to Wichita, Kansas, has been submitted to and considered by the City Planning Commission of Wichita, Kansas, and is hereby transmitted to the Board of City Commissioners with the recommendation that such plat be approved as proposed. Dated this 17th day of January 1950.

The City Planning Commission of the City of Wichita, Kansas.

John N. Free Chairman

Eugene N. Smith Secretary

Approved by the Board of City Commissioners this 31st day of January 1950.

Wm. C. Salome Mayor

C. C. Ellis City Clerk

Approved by the Board of County Commissioners this 11th day of MARCH 1950.

Otis Schweiter County Clerk

Entered on transfer record this 16th day of JULY 1951

Otis Schweiter County Clerk

State of Kansas } S.S.
Sedgwick County }

This is to certify that this instrument was filed for record in the office of the Register of Deeds, this 17th day of July 1950, at 4:00 o'clock P. M., and is duly recorded.

C. S. Ankerman Register of Deeds.
J. W. Clark Dep.

R1-2-26