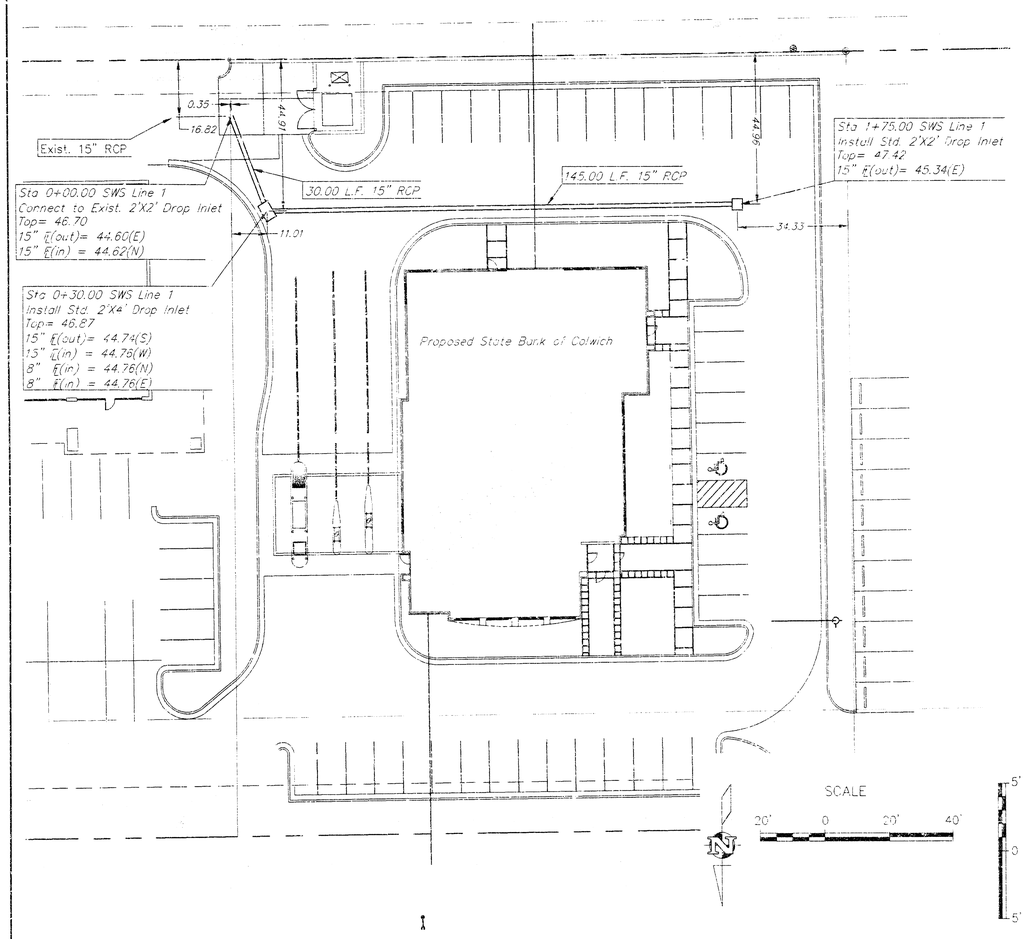

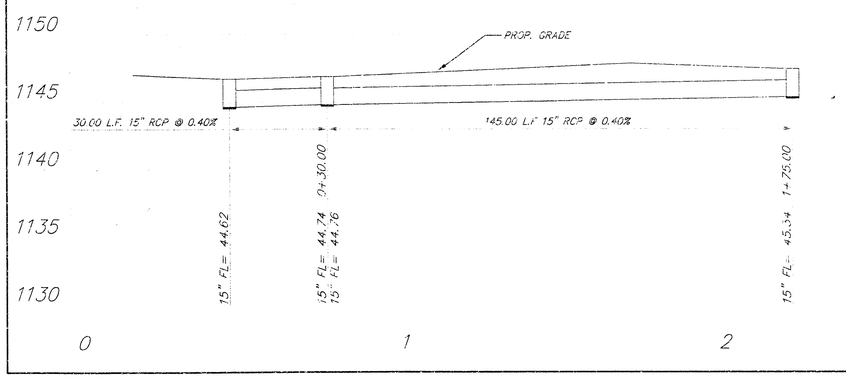

STORM WATER SEWER IMPROVEMENTS TO SERVE
Lot 2 of Block C, Barrington Corner 2nd Addition
STATE BANK OF COLWICH

Project Number
947 PPS (607861)

CITY OF WICHITA, KANSAS

Michael E. Lindebak, P. E., City Engineer

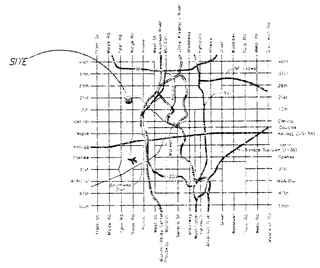

LOCATION MAP

Date: 2-19-00
AS-BUILT
Signed:

BENCHMARK:
Top SW LP Anchor Bolt
Near SW Corner McDonalds
Elev. = 146.64 (City Datum)

11/18/99

APPROVED AS NOTED BY CITY ENGINEER OF WICHITA

STORM SEWERS URH 11/18/99

Inspection and testing for this project are to be provided by a Licensed Consulting Engineering Firm under contract with the Owner/Developer. Said inspection is to be in accordance with the City of Wichita standard construction engineering practices and certified by a Licensed Prof. Engineer. No work shall be performed in dedicated easements or public right-of-way by the Contractor without such inspection nor shall work be commenced without written authorization by the City Engineer. All construction and materials shall comply with the City of Wichita Specifications and Standards (on file and available in the City Engineer's Office).

GENERAL NOTES

1. Contractor will be required to provide notice to utility companies a minimum of twenty-four (24) hours prior to any excavation, as follows:

Kansas One-Call	687-2470

The Contractor must notify the following in case of an emergency:

Cablevision	262-4270
or	263-2061
K.P.L. Gas Service Company	383-8650
Kansas Gas & Electric Company	383-8600
Peoples Natural Gas	942-8611
or	1-800-303-0357
Southwestern Bell Telephone Company	1-571-2611
City of Wichita Water Department	268-4908
City of Wichita Sewer Department	268-4071

2. Exist. utilities and their locations, as shown on the plans, represent the best information obtainable for design. Location information has been obtained from the various utility companies and is either from company record drawings or company-provided field locations. The Contractor will be required to work around existing utilities which do not conflict with proposed construction.

3. The Contractor to verify utility locations prior to construction of this project.

4. Utility service and installation shall be coordinated with the respective utility owners. Contacts are:

KG&E Gas	Steve Orth	261-6867
K.G. & E.	Miles Capps	261-6434
Wichita Water	Paul Bryant	268-4555
	Steve Palmer	268-4908
Southwestern Bell	Jim Tobin	268-2759

BOOKED 6-6-00 MCG D-462

5. All areas disturbed by construction shall be seeded with rye Rebel II Fescure grass at a rate of 350 lbs./acre immediately following construction in that area.

6. Traffic affected by the construction of this project shall be handled in accordance with the latest edition of the Manual on Uniform Traffic Control Devices.

7. All lawn/turf areas disturbed by construction of proposed improvements shall be restored with the same grass/ sod as existing. Restoration of disturbed areas shall include, but not be limited to, top soil preparation, seeding, mulch and/or reseeding. All seeding/sodding work shall be in accordance with the City of Wichita standard specifications and the City of Wichita administrative regulation No. AR78 which governs cleanup and replacement following construction. All costs for this work shall be subsidiary to the lump sum price bid for "Site Restoration."

316/262-1281	PROJECT NUMBER 947 PPS (607861)			AM NO. 99229	State Bank of Colwich **SWS & PROFILE** Wichita, Kansas	SHEET 1 OF 2	REVISED 11/17/99
	DESIGN DD	DRAWN DD	FILE SWSCD	DATE 10/99	SCALE 1"=20'		

18-3-2-7

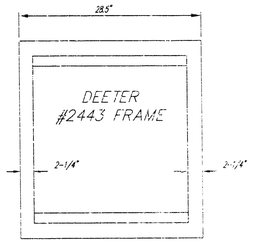

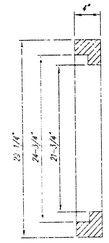

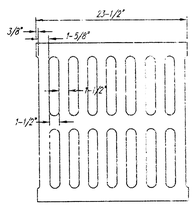

DEETER #2433 GRATE

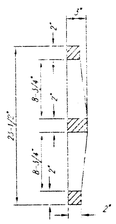

NOTE: Grates shall be imprinted on the top surface with "CITY OF WICHITA" using letters at least 1" in height. Other marking methods may be approved by the engineer.

24" x 24" Frame and Grate Detail

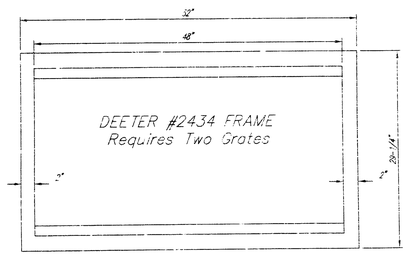

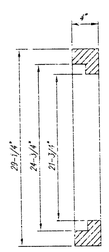

Double 24" x 24" Frame Detail

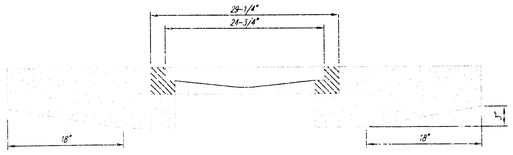

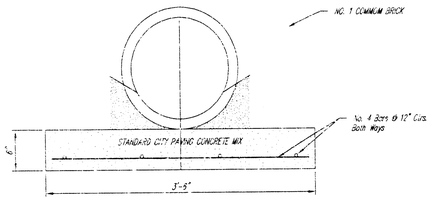

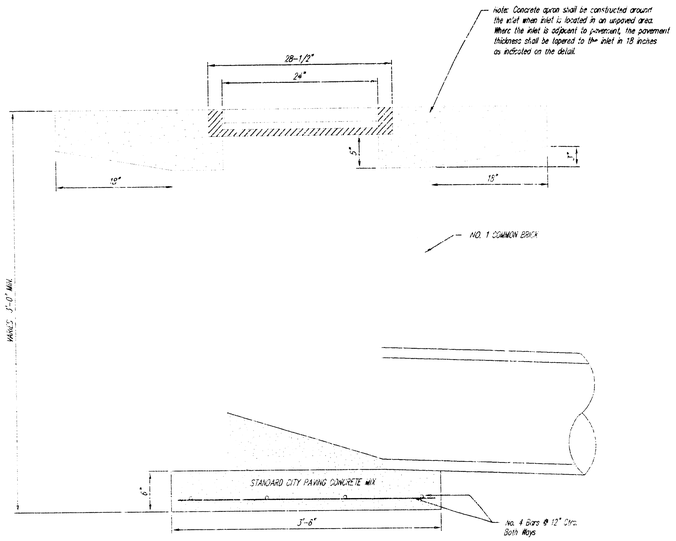

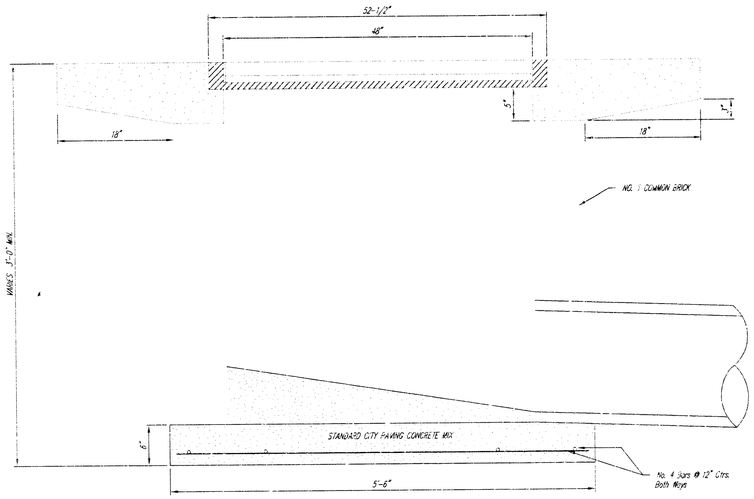

THE CITY OF WICHITA	DROP INLET 2' X 2'/2' X 4'
CITY ENGINEER'S OFFICE CITY HALL – SEVENTH FLOOR 455 NORTH MAIN STREET WICHITA, KANSAS 67202 (316) 268-4501 (316) 268-4114 FAX	M. E. LINDEBAK P.E. – CITY ENGINEER
	PROJECT NUMBER: 797 PPS 607861 / INDEX CODE:
	DATE: MAR 96 / SHEET 2 OF 2

DROPINLET.DWG

18 03 03 01