Bmp-ADD-SAS 97:12:40 6661/01/11

STORM WATER SEWER EXTENSION TO SERVE

RIVERSIDE HEALTH SYSTEM 3RD ADDITION

Private Project Number

953 PPS(607861)

CITY OF WICHITA, KANSAS

Michael E. Lindebak, P.E. City Engineer

NOVEMBER, 1999

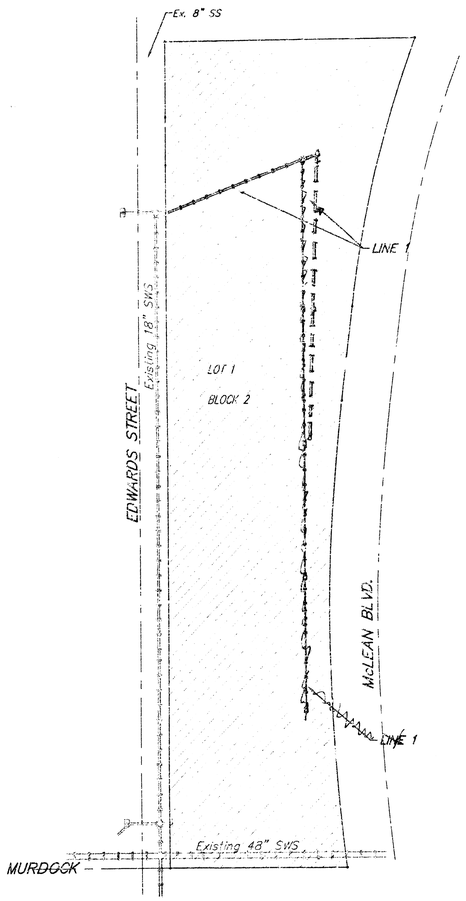

Scale: 1" = 50'

BENCHMARKS

1. "□" Located on top of curb on West side of Mclean Blvd. and South right-of-way line of vacated Murdock
   Elevation = 115.91 City Datum
2. City standard disc 42.5' South & 35.8' West of centerlines of Central & Meridian
   Elevation = 116. 1 City Datum

GENERAL NOTES:

1. Contractor will be required to provide notice to utility companies a minimum of twenty-four (24) hours prior to any excavation, as follows:

   Kansas One-Call 687-2470

   The Contractor must notify the following in case of an emergency:

Multimedia Cablevision	262-0651
K.G.E. Electric Service	383-8650
Kansas Gas Service	393-8600
Peoples Gas Company	942-8350
Southwestern Bell Telephone Company	1-571-2611
City of Wichita Water Dept.	268-4908
City of Wichita Traffic Engineering	269-4446

2. Underground utility service lines and overhead utility pole lines are to be adjusted as necessary by others prior to construction unless the plans specifically call for their adjustment by the Contractor or unless the plans specifically identify a utility to be adjusted by its owner during construction. Existing utilities and their location, as shown on the plans, represent the best information obtainable for design. The Contractor will be required to work around existing utilities within the right-of-way which do not conflict with proposed construction.
3. Trees and shrubs in public right-of-way which are in direct conflict with proposed new construction shall be removed by the Contractor with the Engineer's approval. Trees and shrubs which are not in direct conflict with proposed new construction shall be saved and protected from damage.
4. The Contractor shall give all property owners and/or tenants of developed property abutting the construction of this project a minimum of ten (10) days advance notice prior to start of construction.
5. The Contractor shall be responsible for preserving property irons. The Contractor will be required to re-establish any property irons which are damaged or destroyed by his construction operations. Such irons shall be re-established by a licensed land surveyor in accordance with state laws.
6. All areas disturbed by construction operations shall by seeded with rye grass at a rate of 300 lbs/acre immediately following construction in that area. Prior to seeding, area shall be prepared per City specs.

SHEET INDEX

Title Sheet	1
Line 1	2-3
Special Yard Inlet Detail	4
Copy of Plat	5

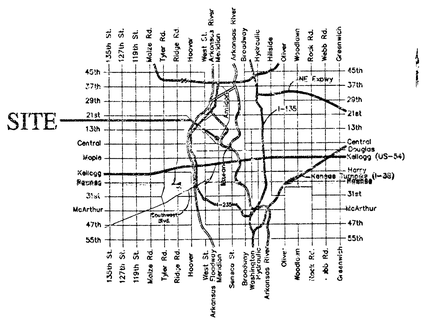

Vicinity Map

Benefit District

BOOKED 57-25-00 NKA D-AFF

As Built 8/00 KK

APPROVED AS NOTED
BY CITY ENGINEER OF WICHITA
Storm Water Sewers VRH 11/10/99

NOTE TO CONTRACTORS

Inspection and testing for this project is to be provided by a Licensed Consulting Engineering Firm under contract with the Owner/Developer. Said inspection is be in accordance with the City of Wichita standard construction engineering practices and certified by a Licensed Professional Engineer. No work shall be performed in dedicated easements or public right-of-way by the Contractor without such inspection nor shall any work be commenced without written authorization by the City Engineer. All Construction and Materials shall comply with the City of Wichita Specifications and Standards (on file and available in the City Engineer's Office).

14-7-4-11

Bench Marks

1. "□" Located on top of curb on West side of Mclean Blvd. and South right-of-way line of vacated Murdock.
   Elevation = 115.91 City Datum

2. City standard disc 42.3' South & 35.8' West of centerlines of Central & Meridian
   Elevation = 116.31 City Datum

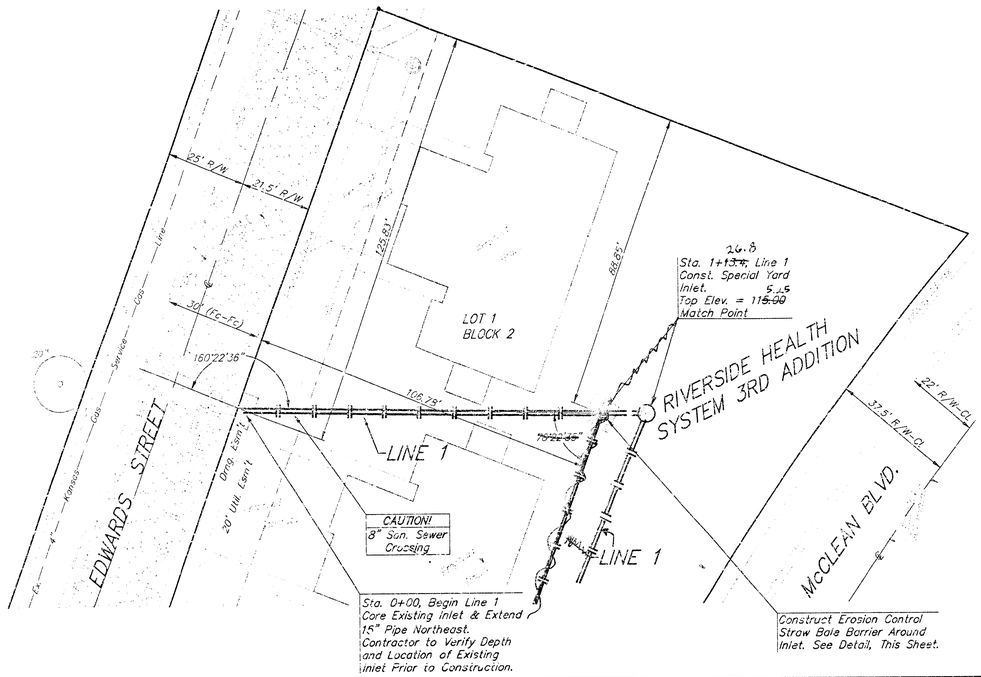

SCALE:
1" = 20' HORIZONTAL
1" = 5' VERTICAL
• = IRON

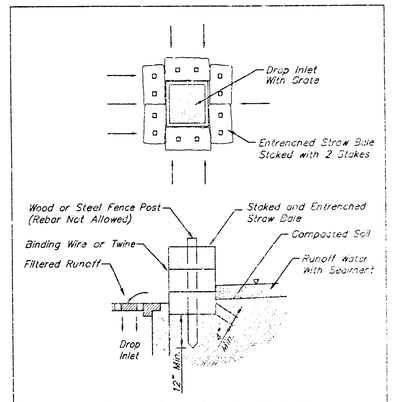

Straw Bale Barrier Detail

Note: Straw Bale Barriers to be Paid per Each as Inlet Sediment Barriers.

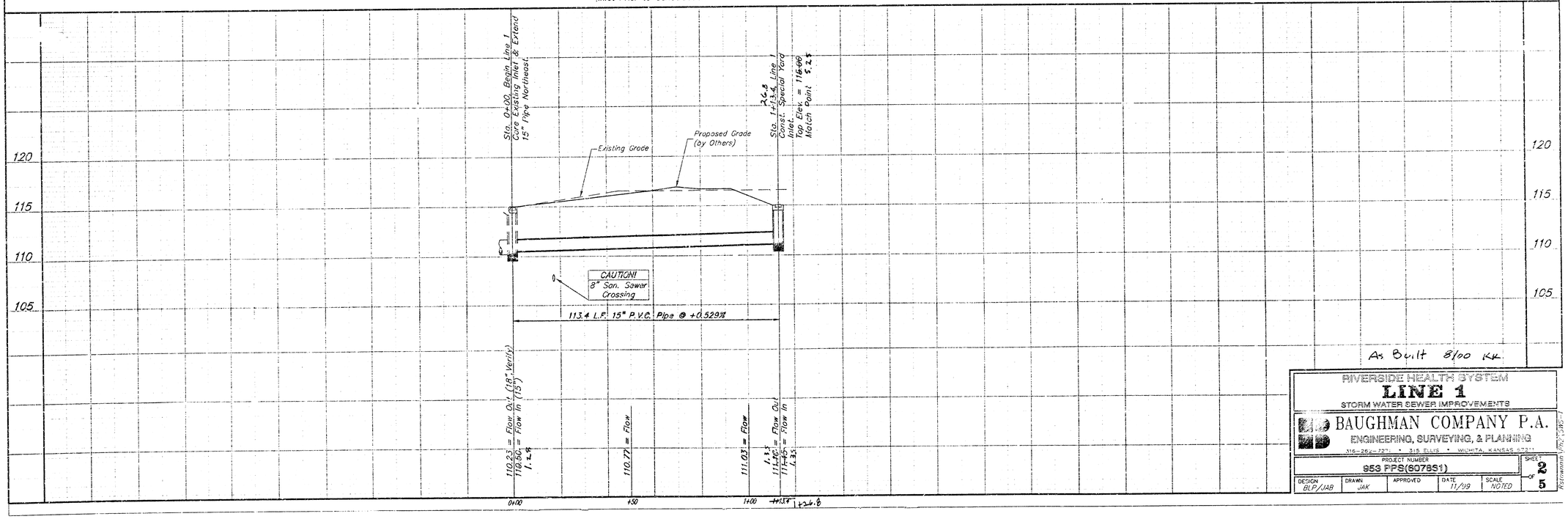

As Built 8/00 KK

RIVERSIDE HEALTH SYSTEM
LINE 1
STORM WATER SEWER IMPROVEMENTS

BAUGHMAN COMPANY P.A.
ENGINEERING, SURVEYING, & PLANNING
316-262-7271 • 315 ELLIS • WICHITA, KANSAS 67211

PROJECT NUMBER					SHEET
953 PPS(607851)					2 OF 5
DESIGN	DRAWN	APPROVED	DATE	SCALE	
BLP/JAB	JAK		11/99	NOTED	

Rstownmin PN2 SWS-1

11/10/1999 08:52:30 SAS BMP2-SAS

Bench Marks

1. " " Located on top of curb on West side of Mclean Blvd. and South right-of-way line of vacated Murdock.
   Elevation = 115.91 City Datum
2. City standard disc 42.3' South & 35.8' West of centerlines of Central & Meridian
   Elevation = 116.31 City Datum

SCALE:
1" = 20'
● = IRON

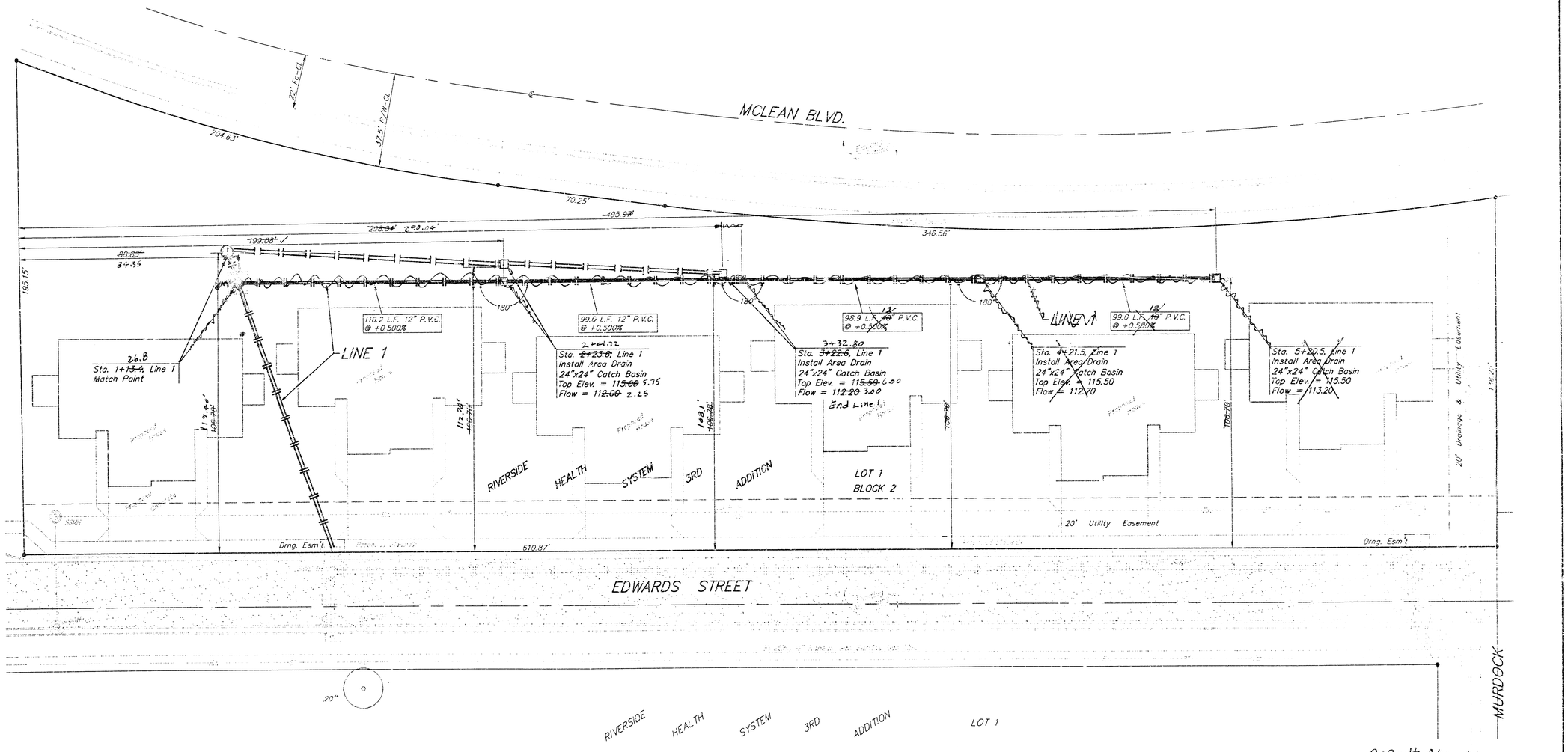

As-built 8/00 KK

RIVERSIDE HEALTH SYSTEM

LINE 1

STORM WATER SEWER IMPROVEMENTS

BAUGHMAN COMPANY P.A.
ENGINEERING, SURVEYING, & PLANNING
316-262-7271 • 315 ELLIS • WICHITA, KANSAS 67211

PROJECT NUMBER	SHEET
953 PPS(607861)	3 OF 5

DESIGN	DRAWN	APPROVED	DATE	SCALE
BLP/JAB	JAK		11/99	NOTED

K:\owlmm\dgn\1-30-2

11/10/1999 08:26:06 Yardinlet.dwg

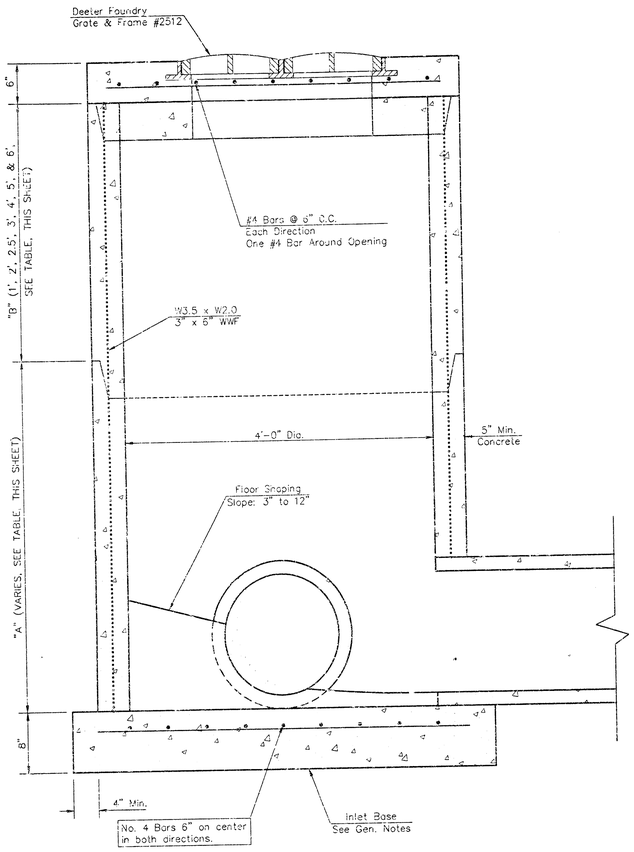

YARD INLET

LINE #	STA.	TOP OF INLET	INLET FLOW	"A"	"B"
1	1+13.4	115.00	111.10	2.40'	1'

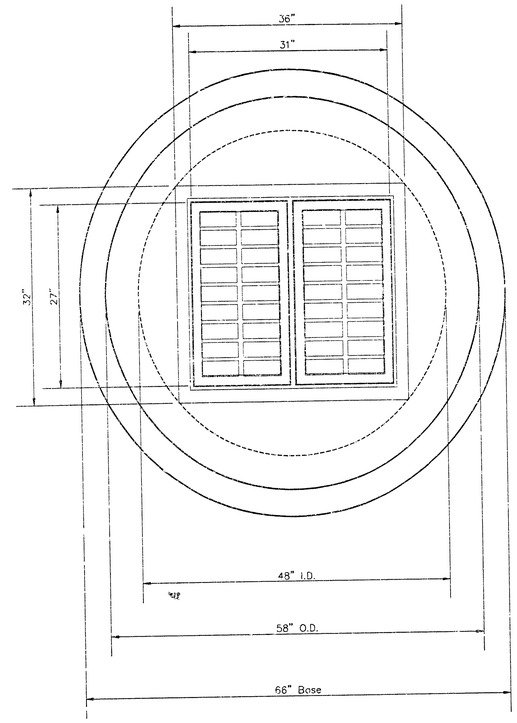

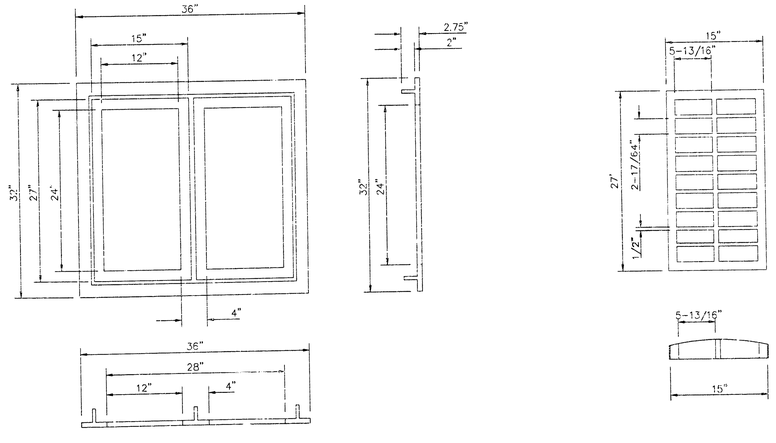

DEETER #2512 CATCH BASIN INLET GRATE & FRAME

GENERAL NOTES

1. Mortar used in masonry construction shall contain 8 sacks of cement per cubic yard. Concrete used in yard inlet bases shall conform to the requirements of concrete for concrete pavement construction as specified in the city standard paving specifications using city concrete cement mix without air entraining.

2. Reinforcing steel shall be installed in the yard inlet bases and shall consist of no. 4 bars placed on 6" centers in both directions. The yard inlet base reinforcement shall be placed 6" above the bottom of the yard inlet base. All costs for furnishing and installing reinforcing steel shall be included in the unit price bid for the yard inlet.

3. The floors of all yard inlet shall be shaped with flow channels such that the inlets will be self cleaning and free of areas where solids could be deposited. Flow channels shall be formed to match the bottom halves of the inflowing pipes and the outflowing pipe as shown by the drawings. Inlet floors shall have slopes of 3 inches per foot in the areas outside of the flow channels sloped toward the flow channels. Pipes laid through inlets shall have the top half removed to neat lines for the full inside diameter of the inlet. Inlet floors shall then be shaped around the bottom half of the pipe which forms the flow channel.

4. Pipes installed within the excavation made for the inlet shall be cradled with concrete to the limits of the inlet excavation. When clay pipe is used, the cradle shall extend to the first joint outside the inlet. The cradle shall be terminated at the clay pipe joint in a manner which will maintain the flexibility of the joint. Cost of cradle within inlet excavation or to clay pipe joints adjacent to inlet shall be included in the unit price bid for the inlet.

5. Inlet grate castings and inlet frame castings shall conform to the requirements as indicated in the standard specifications and as shown in the standard detail drawing.

6. The crowns of inflowing pipes shall never be set lower than the crown of the outflowing pipe.

7. Joints between inlet sections to be sealed with two two wraps of extruded butyl rubber joint mastic meeting City of Wichita Type "P" Manhole Specifications.

8. Special yard inlet shall be paid for at the unit price bid per each. All standard yard inlet diameters will be 4'.

SPECIAL YARD INLET

WICHITA, KANSAS

BAUGHMAN COMPANY P.A.
ENGINEERING, SURVEYING, & PLANNING
316-262-7271 • 315 ELLIS • WICHITA, KANSAS 67211

PROJECT NUMBER	SHEET
953 PPS(907851)	4 OF 5

DESIGN	DRAWN	APPROVED	DATE	SCALE
BLP/JAB	JAK		11/99	NONE

DETAILS YARDINLET

RIVERSIDE HEALTH SYSTEM 3RD ADDITION

WICHITA, SEDGWICK COUNTY, KANSAS

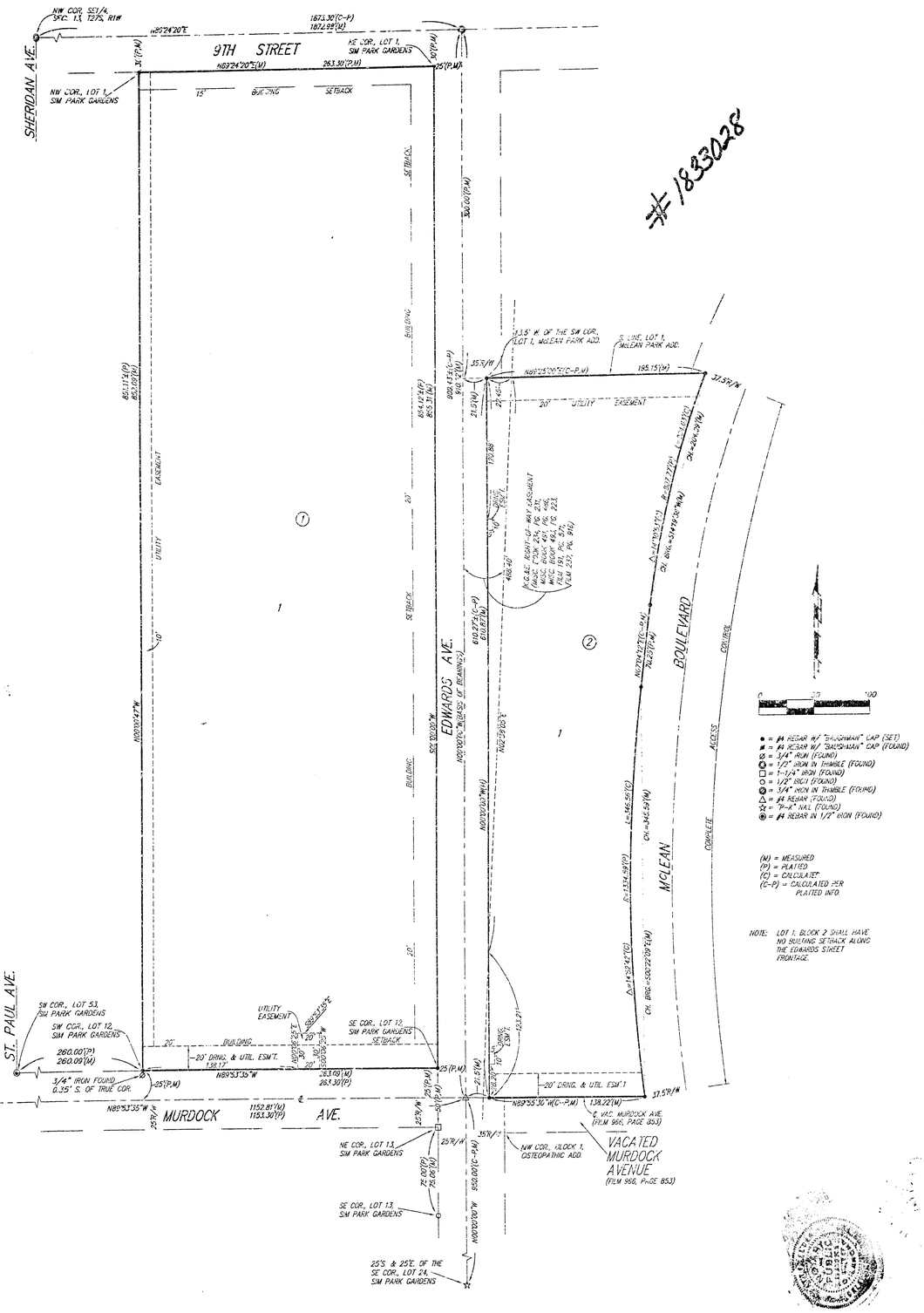

State of Kansas)
Sedgwick County) SS We, Baughman Company, P.A., Surveyors in aforesaid County and State do hereby certify that we have surveyed and platted "RIVERSIDE HEALTH SYSTEM 3RD ADDITION", Wichita, Sedgwick County, Kansas, and that the accompanying plat is a true and correct exhibit of the property surveyed, described as and being a replat of Lots 1, 2, 3, 4, 5, 6, 7, 8, 9, 10, 11, and 12, Sim Park Gardens, Wichita, Sedgwick County, Kansas together with Block 2, Osteopathic ~~Addition, Wichita, Sedgwick County, Kansas and together with the N1/2~~ of vacated Murdock Street lying south of and adjacent to said Block 2, and together with a tract of land in the SE1/4 of Sec. 13, Twp. 27-S, R-1-W lying between the north line of said Block 2 and the south line of McLean Park Addition, Wichita, Kansas, and west of the west line of McLean Blvd. and east of the line of Edwards Ave., and together with the east 13.50 feet of that part of Edwards Ave. lying south of the south line of said McLean Park Addition, as extended west, and lying north of the center of Murdock as dedicated in said Osteopathic Addition, as extended west.

All being situated in the SE1/4 of Sec. 13, Twp-27-S, R-1-W, of the 6th P.M., Sedgwick County, Kansas.

Existing public easements and dedications being vacated by virtue of K.S.A. 12-512(b).

Baughman Co., P.A.

Michael G. Conrey, Surveyor — 7-27-99
Michael G. Conrey

Know all men by these presents that we, the undersigned, have caused the land in the surveyors certificate to be platted into a Lots and Blocks to be known as "RIVERSIDE HEALTH SYSTEM 3RD ADDITION", Wichita, Sedgwick County, Kansas. The utility easements are hereby granted as indicated for the construction and maintenance of all public utilities. The drainage and utility easements are hereby granted as indicated for drainage purposes and for the construction and maintenance of all public utilities. The drainage easements are hereby granted as indicated for drainage purposes. All abutters rights of access to or from McLean Boulevard over and across the east line of lot 1, Block 2, are hereby granted to the City of Wichita, Kansas.

Riverside Health System, Inc.

Robert Dixon, President & C.E.O.

Edward M. Harrison
Edward M. Harrison

Evelyn A. Johaning
Paul Johaning

State of Kansas)
Sedgwick County) SS The foregoing instrument acknowledged before me, this 23 day of March, 1999, by Robert Dixon, President and C.E.O. of Riverside Health System, Inc., on behalf of the corporation.

Rebecca J. Topham, Notary Public

My App't. Exp. 9-13-2001

REBECCA J. TOPHAM
Notary Public - State of Kansas
My Appt. Expires 9-13-2001

State of Oklahoma)
Oklahoma County) SS The foregoing instrument acknowledged before me, this 18th day of March, 1999, by Edward M. Harrison, a single person.

Patty Elder, Notary Public
PATTY ELDER

My App't. Exp. 3-10-2001

State of Oklahoma)
Oklahoma County) SS The foregoing instrument acknowledged before me, this 18th day of March, 1999, by Evelyn A. Johaning and Paul Johaning, wife and husband.

Patty Elder, Notary Public
PATTY ELDER

My App't. Exp. 3-10-2001

This plat of "RIVERSIDE HEALTH SYSTEM 3RD ADDITION", Wichita, Sedgwick County, Kansas has been submitted to and approved by the Wichita-Sedgwick County Metropolitan Area Planning Commission, Wichita, Kansas.
Dated this 14 day of January, 1999.
Wichita-Sedgwick County Metropolitan Area Planning Commission

William W. Johnson, Chairman

Marvin S. Krout, Secretary

This plat approved and all dedications shown hereon accepted by the City Council of the City of Wichita, Kansas, this 11th day of May, 1999.

Bob Knight, Mayor

Pat Burnett, City Clerk

Reviewed in accordance with K.S.A. 58-2005 on this 29th day of September, 1999.

Tricia L. Rebella, L.S.#1248
Deputy County Surveyor
Sedgwick County, Kansas

Entered on transfer record this 29th day of September, 1999.

James Aylward, Deputy Clerk

State of Kansas)
Sedgwick County) SS This is to certify that this plat has been filed for record in the office of the Register of Deeds, this 30th day of September, 1999, at 8:40 o'clock A.M. and is duly recorded.

Bill Meer, Register of Deeds

Linda Kizzire, Deputy

5/5

BAUGHMAN COMPANY P.A.
ENGINEERING, SURVEYING, & PLANNING

E:\SHARE\1HS3FA.DWG Wed Feb 24 12:08:23 1999