CONSTRUCTION PLANS FOR STORM SEWER IMPROVEMENTS
ABERDEEN 2ND ADDITION-PHASE 2
TO
THE CITY OF WICHITA, KANSAS

MICHAEL E. LINDEBAK, P.E. – CITY ENGINEER

PROJECT NO. 962-PPS
OCA# 607861

INDEX

TITLE SHEET	SHEET 1
STORM SEWER	SHEET 2
DRIVEWAY GRATED INLET	SHEET 3
ABERDEEN 2ND ADDITION PLAT	SHEET 4

GENERAL NOTES:

1. Utility service lines, poles, valve boxes, meters and etc. are to be adjusted as necessary by others prior to construction unless the plans specifically call for their adjustment by the Contractor. Existing utilities and their location, as shown on the plans, represent the best information obtainable for design. The Contractor will be required to work around existing utilities within the right-of-way which do not conflict with proposed construction.

2. A saw cut of at least one-half the depth of existing surface courses or one-fourth the depth of the existing total pavement thickness shall be provided at locations where proposed construction abuts an existing surface course or pavement for which partial removal of that surface or pavement is required. Sawed joint to facilitate removal within three (3) feet of existing joints will not be permitted and for such instances the limits of removal shall extend to the existing joint. Such saw cuts will not be paid for directly and this cost shall be considered as subsidiary to the project costs.

3. Rubble from the removal of miscellaneous structures and excess excavation which is to be wasted shall be disposed of on sites to be provided by the Contractor. These sites shall be approved by the Engineer as to suitability, appearance and site location. Locations that, in the opinion of the Engineer, will leave an unsightly appearance will not be approved.

   All suitable excavation shall be wasted onsite unless otherwise directed on low lying lots within the addition before any material is placed offsite

   All disposal sites must be approved by the Kansas Department of Health and Environment. Material either stockpiled or disposed of in a flood plain would require a Kansas State Board of Agriculture permit. Any material dumped in waters of the United States or wetlands is subject to U.S. Corps of Engineers permitting regulations. Any material buried or stockpiled beyond approved construction limits would require additional archaeological investigations unless buried in a previously approved borrow location.

4. Trees and shrubs in public right-of-way which are in direct conflict with proposed new construction shall be removed by the Contractor with the Engineer's approval. Trees and shrubs which are not in direct conflict with proposed new construction shall be saved and protected from damage.

5. The Contractor shall be responsible for preserving property irons. The Contractor will be required to reestablish any property irons which are damaged or destroyed by his construction operations. Such irons shall be reestablished by a licensed land surveyor in accordance with state laws.

6. All disturbed areas within street right-of-ways shall be seeded with temporary rye grass within 14 days of disturbance at a rate of 200 lbs. per acre.

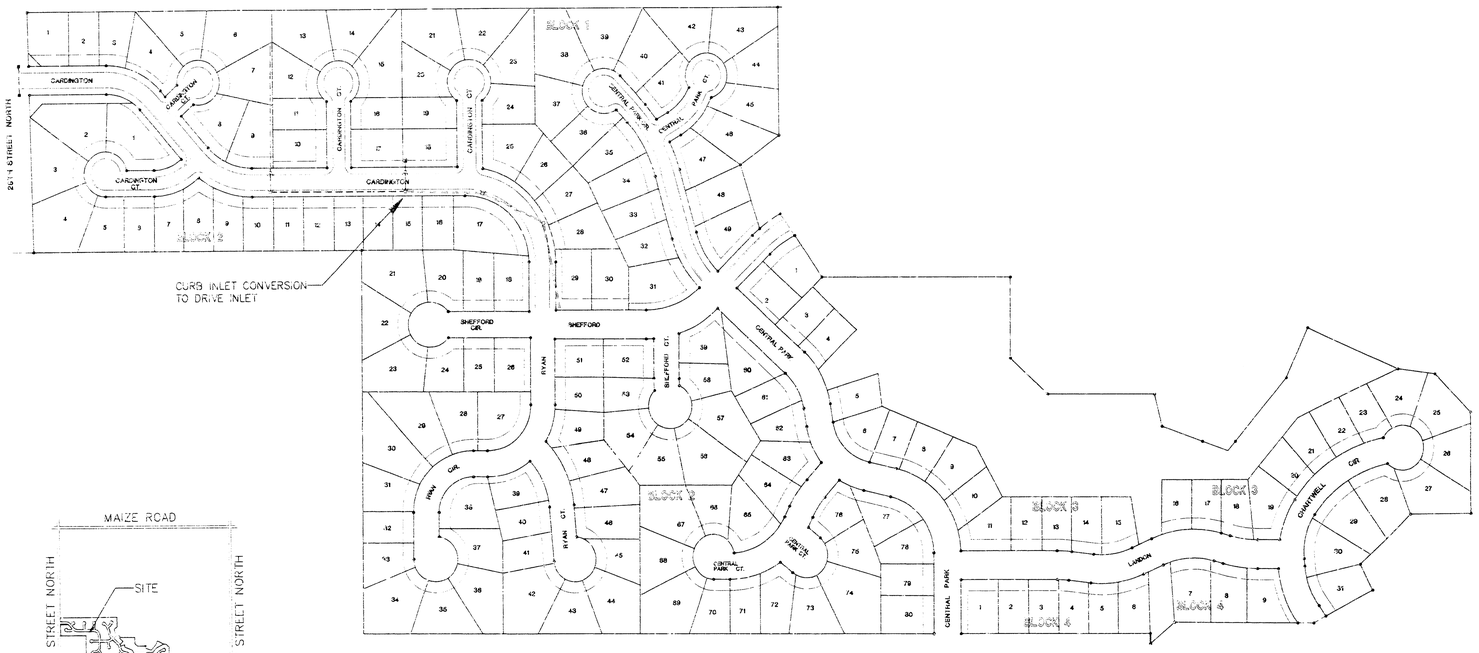

LOCATION MAP
No Scale

NOTE TO CONTRACTOR

Inspection and testing for this project is to be provided by a licensed consulting engineering firm under contract with the owner/developer. Said inspection is to be in accordance with the City of Wichita standard construction engineering practices and certified by a licensed professional engineer. No work shall be performed in dedicated easements or in public right-of-way by the contractor without such inspection. Nor shall any work be commenced in dedicated easements or public right-of-way without written authorization by the City Engineer.

APPROVED AS NOTED

BY THE CITY ENGINEER OF WICHITA

Sanitary Sewers _____

Storm Sewers VRH 12/3/99

Driveway Approaches _____

Water Mains _____

Paving _____

NOVEMBER 1999

POE & ASSOCIATES OF KANSAS, INC.
CONSULTING ENGINEERS
1640 E. Central, Suite 200 ■ Wichita KS 67208 ■ 316/685-4114 ■ Fax 316/685-4444

"RECORD DRAWINGS"
BY BK/JH 3/1/00

JAMES M. USRY
14598
KANSAS
PROFESSIONAL ENGINEER
12-2-99

Scale 1" = 150'

BENCH MARKS

1. City of Wichita Benchmark disc, 67' south of centerline 21st St. & 79' south of section line, and 46' east of centerline 119th St.
   Elev. 172.08

2. 80d nail in power pole, 30' east and 50' south of Northwest Corner of Government Lot 6 in SW Quarter of Section 6, T27S, R1W.
   Elev. 172.08

3. 80d nail in power pole 50' south of NE corner of Government Lot 3 in NW Quarter of Section 6, T27S, R1W.
   Elev. 179.96

4. 80d nail in power pole 40' west and 40' north of the NW Corner of the NW Corner of Sec. 6, T27S, R1W.
   Elev. 175.05

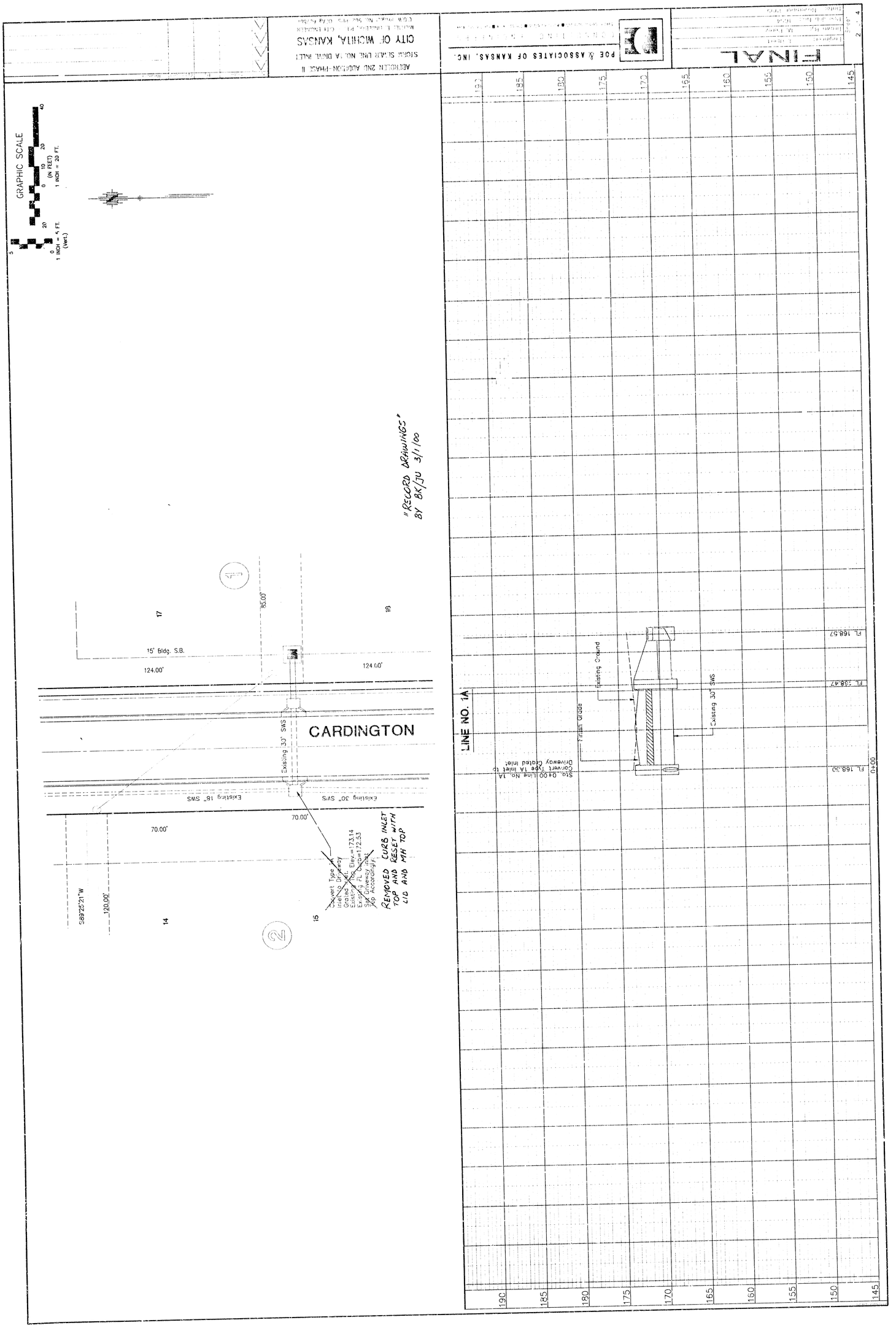

ADDITION 2ND ADDITION-PHASE II
STORM SEWER LINE NO. 1A DRAW. INLET
CITY OF WICHITA, KANSAS
POE & ASSOCIATES OF KANSAS, INC.
FINAL
GRAPHIC SCALE
1 INCH = 5 FT. (Vert.)
1 INCH = 20 FT. (IN FEET)
"RECORD DRAWINGS" BY BK/JU 3/1/00
CARDINGTON
15' Bldg. S.B.
124.00'
85.00'
70.00'
120.00'
S89°25'21"W
Existing 30" SWS
Existing 18" SWS
Existing 30" SWS
Convert Type 1A Inlet to Driveway Grated Inlet
Existing Top Elev.=173.14
Existing FL Curb=172.53
Sex Driveway Inlet Top Accordingly
REMOVED CURB INLET TOP AND RESET WITH LID AND MH TOP
LINE NO. 1A
Sta. 0+00 Line No. 1A
Convert Type 1A Inlet to Driveway Grated Inlet
Finish Grade
Existing Ground
Existing 30" SWS
FL 168.57
FL 158.47
FL 168.30
0+00
190
185
180
175
170
165
160
155
150
145

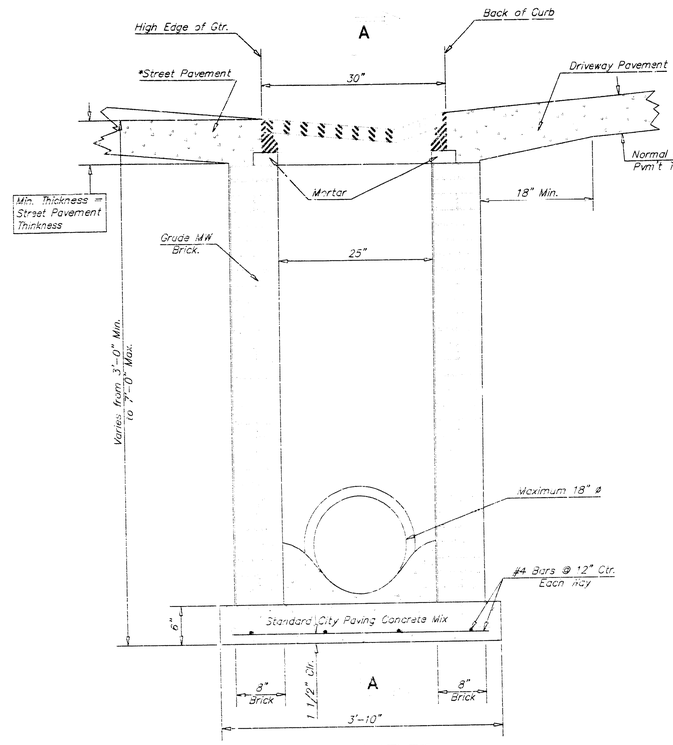

END OUTLET

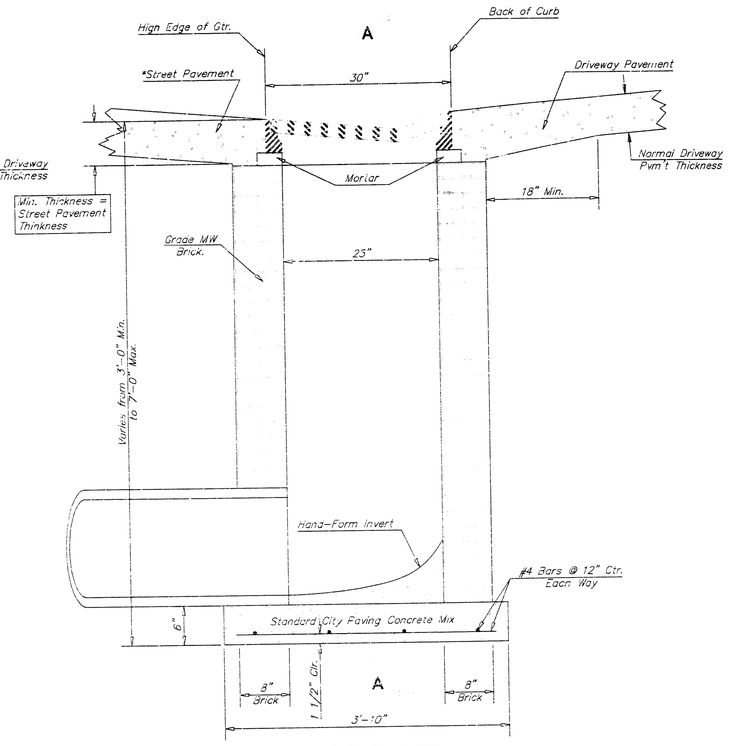

SIDE OUTLET

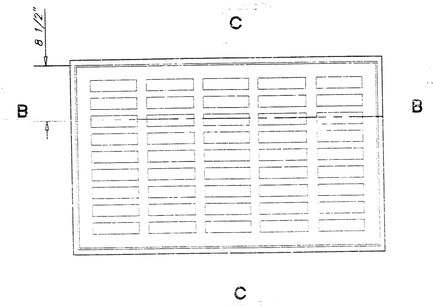

PLAN

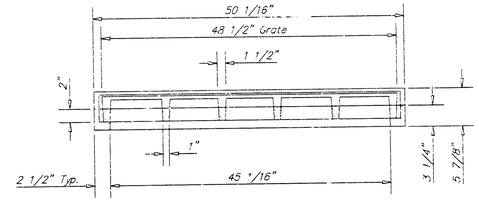

SECTION B-B

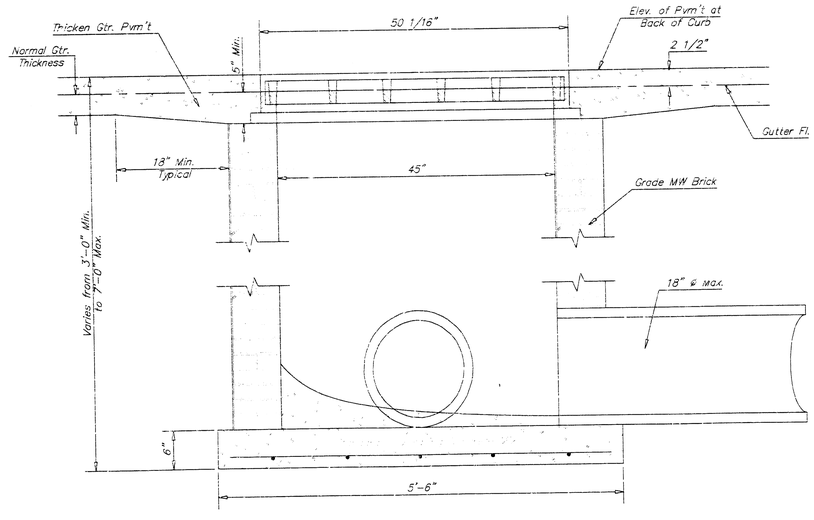

SECTION A-A

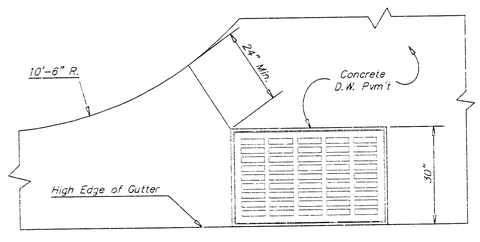

PLAN

Radius Ramp Drive to be Constructed On Lot 3, Block 2 per City Standard

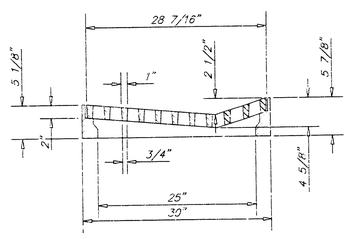

SECTION C-C

DEETER #2095 FRAME & GRATE

GENERAL NOTES

1. Grate frame to be installed on thin mortar cushion to insure full support along brick walls. Concrete used for inlet construction shall be concrete pavement mix.
2. Inlet invert shall be shaped with 8 sack sand mix concrete to create flow channels and to increase hydraulic efficiency such that the inlet will be self cleaning between all inlet and/or outlet pipes.
3. The ends of all pipes installed in inlets shall be cut off flush with the inside face of the inlet wall.
4. Inlet Frame and Grate to be Deeter #2095 of approved equal

"RECORD DRAWINGS" BY BK/JU 3/1/00

THE CITY OF WICHITA
CITY ENGINEER'S OFFICE
CITY HALL - SEVENTH FLOOR
455 NORTH MAIN STREET
WICHITA, KANSAS 67202
(316) 268-4501
(316) 268-4114 FAX

DRIVEWAY GRATED INLET SINGLE

M. E. LINDEBAK P.E. - CITY ENGINEER

PROJECT NUMBER	INDEX CODE
XXX-XXXXX	XXXXXX
DATE MAR 96	SHEET 3 OF 4

ABERDEEN 2ND ADDITION-PHASE II
DRIVEWAY GRATED INLET-SINGLE
CITY OF WICHITA, KANSAS

POE & ASSOCIATES OF KANSAS, INC.

FINAL

G:\APPS\DCA\P\654\Base.dwg Thu Dec 02 16:27:46 1999 Matt Perez

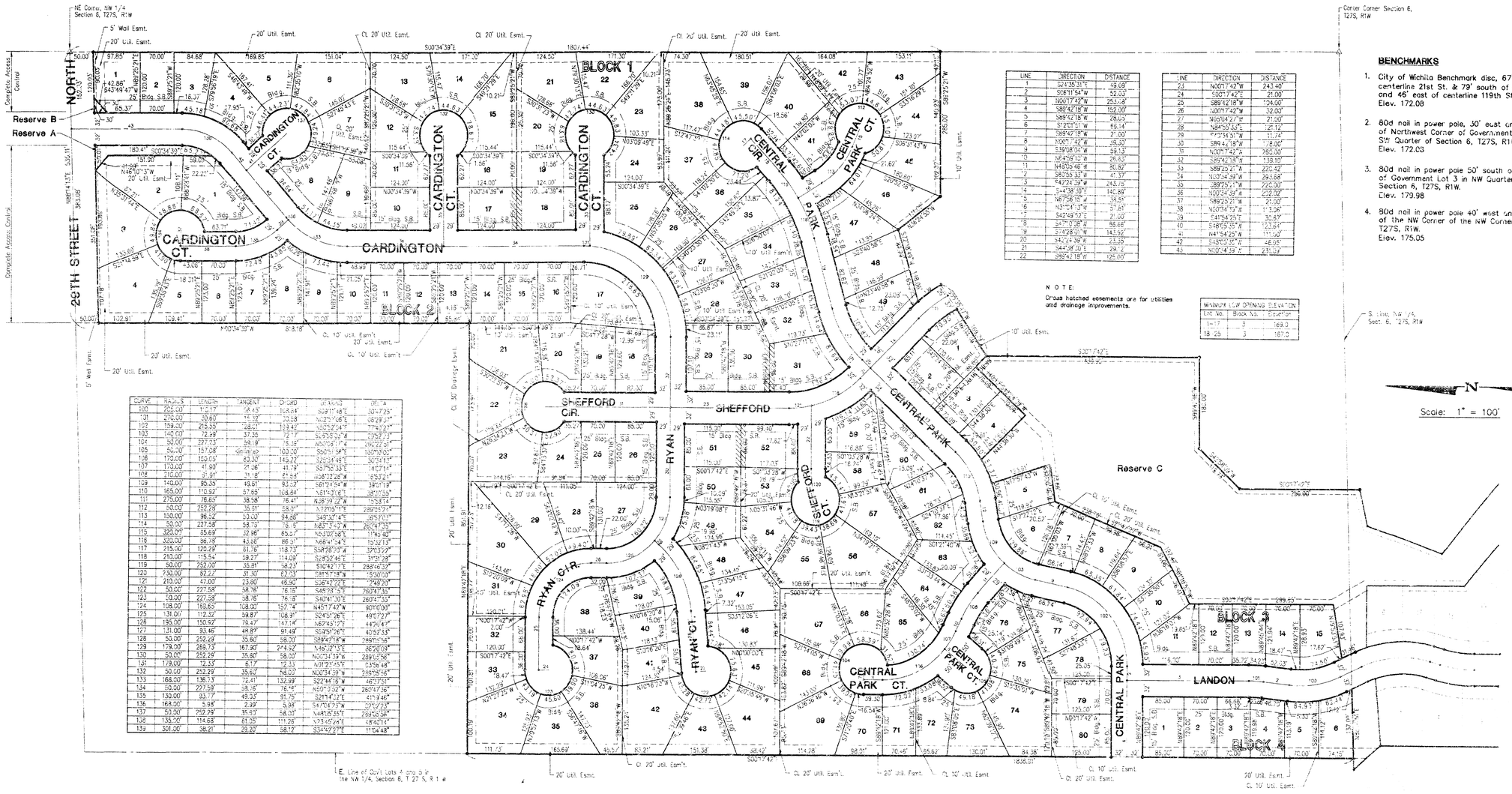

LINE	DIRECTION	DISTANCE
1	S21°35'31"E	48.08'
2	S08°11'54"W	52.00'
3	N00°17'42"W	253.68'
4	S89°42'18"W	152.00'
5	S89°42'18"W	28.05'
6	S72°03'21"W	65.14'
7	S89°42'18"W	21.00'
8	N00°17'42"W	39.30'
9	S89°08'04"W	58.13'
10	N54°59'12"W	26.63'
11	N48°29'46"W	30.92'
12	S80°55'33"W	41.37'
13	S42°24'39"W	243.75'
14	S44°38'30"E	140.89'
15	N87°56'15"W	58.51'
16	N31°54'13"W	57.81'
17	S42°49'57"E	21.00'
18	S47°10'03"W	88.66'
19	S14°28'01"W	143.92'
20	S42°24'39"W	23.25'
21	S44°38'30"E	29.12'
22	S89°42'18"W	125.00'

LINE	DIRECTION	DISTANCE
23	N00°17'42"W	243.40'
24	S00°17'42"E	21.00'
25	S89°42'18"W	124.00'
26	N00°17'42"W	32.00'
27	N05°04'27"W	21.00'
28	N84°55'33"E	21.12'
29	S79°34'51"W	11.74'
30	S89°42'18"W	178.00'
31	N00°17'42"W	260.00'
32	S89°42'18"W	138.10'
33	S89°25'21"W	220.42'
34	N00°34'39"W	293.66'
35	S89°25'21"W	220.00'
36	N00°34'39"W	252.02'
37	S89°25'21"W	21.00'
38	N00°34'39"W	113.06'
39	S41°54'25"E	30.87'
40	S48°05'35"W	123.64'
41	N41°54'25"W	111.00'
42	S48°05'35"W	46.06'
43	N00°34'39"W	231.09'

NOTE:
Cross hatched easements are for utilities and drainage improvements.

MINIMUM LOW OPENING ELEVATION		
Lot No.	Block No.	Elevation
1-17	3	169.0
18-25	3	167.0

CURVE	RADIUS	LENGTH	TANGENT	CHORD	CHORD BEARING	DELTA
100	250.00'	110.17'	56.13'	109.34'	S08°11'48"E	25°14'25"
101	270.00'	30.60'	15.32'	30.58'	N22°51'08"E	06°29'37"
102	159.00'	215.55'	128.01'	199.42'	N50°52'04"E	77°40'27"
103	140.00'	72.69'	37.35'	72.17'	S25°53'07"W	29°44'35"
104	50.00'	227.13'	58.19'	83.33'	N50°51'14"W	260°22'31"
105	50.00'	157.08'	Ginfinite	100.00'	S89°51'54"E	180°00'00"
106	170.00'	150.05'	80.30'	145.22'	S26°34'49"E	50°34'13"
107	170.00'	41.90'	21.06'	41.79'	S57°55'33"E	14°07'41"
108	210.00'	31.91'	31.18'	61.65'	N66°22'28"W	85°21'41"
109	140.00'	95.33'	49.61'	93.57'	S61°21'54"W	39°01'13"
110	165.00'	110.97'	57.65'	108.84'	N61°30'16"E	38°31'55"
111	275.00'	78.65'	39.58'	78.41'	N36°39'27"W	16°23'14"
112	50.00'	252.28'	35.51'	58.91'	N22°03'14"E	289°03'27"
113	150.00'	96.52'	50.00'	94.86'	S49°30'43"E	36°52'03"
114	320.00'	85.69'	32.96'	85.47'	N53°00'58"E	15°20'40"
115	320.00'	86.78'	43.66'	86.51'	N68°41'54"E	15°32'13"
116	215.00'	120.29'	61.76'	118.73'	S84°28'09"W	32°03'22"
117	210.00'	115.54'	59.27'	114.09'	S28°57'46"E	31°31'28"
118	50.00'	252.00'	35.81'	58.23'	S10°42'17"E	288°46'34"
119	230.00'	82.27'	41.50'	82.03'	S81°57'18"W	20°30'00"
120	210.00'	47.00'	23.60'	46.90'	S06°42'22"E	12°49'20"
121	50.00'	227.58'	58.76'	76.18'	S48°58'45"E	260°47'36"
122	50.00'	227.58'	58.76'	76.18'	S40°41'50"E	260°47'36"
123	108.00'	169.65'	108.00'	152.74'	N45°17'42"W	90°00'00"
124	131.00'	112.32'	59.87'	108.91'	S24°51'26"E	49°07'27"
125	195.00'	150.92'	79.47'	147.14'	N67°43'12"E	44°20'43"
126	131.00'	93.46'	44.89'	91.49'	S09°57'06"E	40°52'33"
127	50.00'	252.28'	35.80'	58.20'	S89°42'18"W	290°05'54"
128	179.00'	269.73'	167.90'	244.92'	N46°32'13"E	86°19'09"
129	50.00'	252.29'	35.80'	58.00'	N00°34'39"W	289°05'58"
130	179.00'	12.33'	6.17'	12.33'	N01°23'45"E	3°56'48"
131	50.00'	252.29'	35.80'	58.00'	N00°34'39"W	289°05'58"
132	166.00'	136.13'	72.41'	132.99'	S22°44'16"W	46°57'51"
133	50.00'	227.59'	58.16'	76.16'	N50°10'02"W	260°47'36"
134	130.00'	93.77'	49.03'	91.75'	S21°14'22"E	41°19'46"
135	168.00'	5.98'	2.99'	5.98'	S47°04'35"W	2°02'23"
136	50.00'	252.79'	35.93'	58.00'	N48°58'15"E	289°35'58"
137	135.00'	114.68'	61.25'	111.28'	N73°45'24"E	48°40'14"
138	301.00'	38.21'	19.20'	58.12'	S34°42'27"E	11°04'48"

BENCHMARKS

1. City of Wichita Benchmark disc, 67' south of centerline 21st St. & 79' south of section line, and 46' east of centerline 119th St. Elev. 172.08
2. 80d nail in power pole, 30' east and 50' south of Northwest Corner of Government Lot 6 in SW Quarter of Section 6, T27S, R1W. Elev. 172.03
3. 80d nail in power pole 50' south of NE corner of Government Lot 3 in NW Quarter of Section 6, T27S, R1W. Elev. 179.98
4. 80d nail in power pole 40' west and 40' north of the NW Corner of the NW Corner of Sec. 6, T27S, R1W. Elev. 175.05

ABERDEEN SECOND ADDITION

TO WICHITA, SEDGWICK COUNTY, KANSAS

"RECORD DRAWINGS"
BY BK/JU 3/1/00

KENNETH C. SIMS LICENSED LS-684 KANSAS LAND SURVEYOR

9-3-96

Sheet No. 1 of 2

G:\APPS\CAD\Projects\aberdeen2.dwg - Fri, Dec 03 14:36:46 1999 - Matt Perez

PC71-5B