STORM WATER SEWER TO SERVE

BENCOR ADDITION

Private Project Number

979 PPS (607861)

CITY OF WICHITA, KANSAS

Michael E. Lindebak, P.E. City Engineer

April 2000

LEGAL DESCRIPTION:

Bencor Addition, Wichita, Sedgwick County, Kansas

BENCHMARK:

1. *City of Wichita Disc 43.5 feet East, and 51 feet North of the centerline of 13th Street North & Woodlawn Blvd. Elevation = 200.58(City Datum).*
2. *"□" in the south drive of subject property, on the back of walk, elevation = 199.28(City Datum)*

General Notes:

1. *Contractor will be required to provide notice to utility companies a minimum of forty-eight (48) hours prior to any excavation, as follows:*

Kansas One-Call	*687-2470*

   The Contractor must notify the following in case of an emergency:

Cox Communication	*262-0661*
or	*263-2051*
Kansas Gas Service	*383-8600*
KGE	*383-8650*
Peoples Gas Company	*942-8811*
Southwestern Bell Telephone Company	*800-344-7233*
City of Wichita Water Department	*268-4908*
City of Wichita Sewer Maintenance	*268-4071*

2. *Underground utility service lines and overhead utility pole lines are to be adjusted as necessary by others prior to construction unless the plans specifically call for their adjustment by the Contractor or unless the plans specifically identify a utility to be adjusted by its owner during construction. Existing utilities and their location, as shown on the plans, represent the best information obtainable for design. The Contractor will be required to work around existing utilities within the right-of-way which do not conflict with proposed construction.*
3. *Contractor shall not start work on the project until the Project Inspector is assigned to the project and is present on the site. Any work done without inspection will be required to be uncovered for inspection.*
4. *Trees and shrubs in public right-of-way which are in direct conflict with proposed new construction shall be removed by the Contractor with the Engineer's approval. Trees and shrubs which are not in direct conflict with proposed new construction shall be saved and protected from damage.*
5. *Rubble from the removal of miscellaneous structures and excess excavation which is to be wasted shall be disposed of on sites to be provided by the Contractor. These sites shall be approved by the Engineer as to suitability, appearance and site location. Locations that, in the opinion of the Engineer, will leave an unsightly appearance will not be approved. All disposal sites must be approved by the Kansas Department of Health and Environment. Material either stockpiled or disposed of in a flood plain would require a Kansas State Board of Agriculture permit. Any material dumped in waters of the United States or wetlands is subject to U.S. Corps. of Engineers permitting regulations. Any material buried or stockpiled beyond approved construction limits would require additional archaeological investigations unless buried in a previously approved borrow location.*
6. *Cuts made to paved surfaces on public property will be repaired by the City's contractor and charged against the owner/applicant. Unit repair prices are available from the City at 268-4418. A surcharge may be applicable; call 268-4418 for details. Repair costs to be paid prior to release of sewer service if sewer service is affected. Contractor shall obtain permit prior to construction.*
7. *All disturbed areas not intended for pavement or sidewalk construction shall be seeded with Kansas Premium Fescue Blend at a rate of 8 lb./1000 Sq. Ft.*

Index

Title Sheet	1
Plan/Profile	2
Curb Inlet Detail	3
Drop Inlet Detail	4
Manhole Detail	5
Manhole Ring Detail	6
Copy of the Plat	7

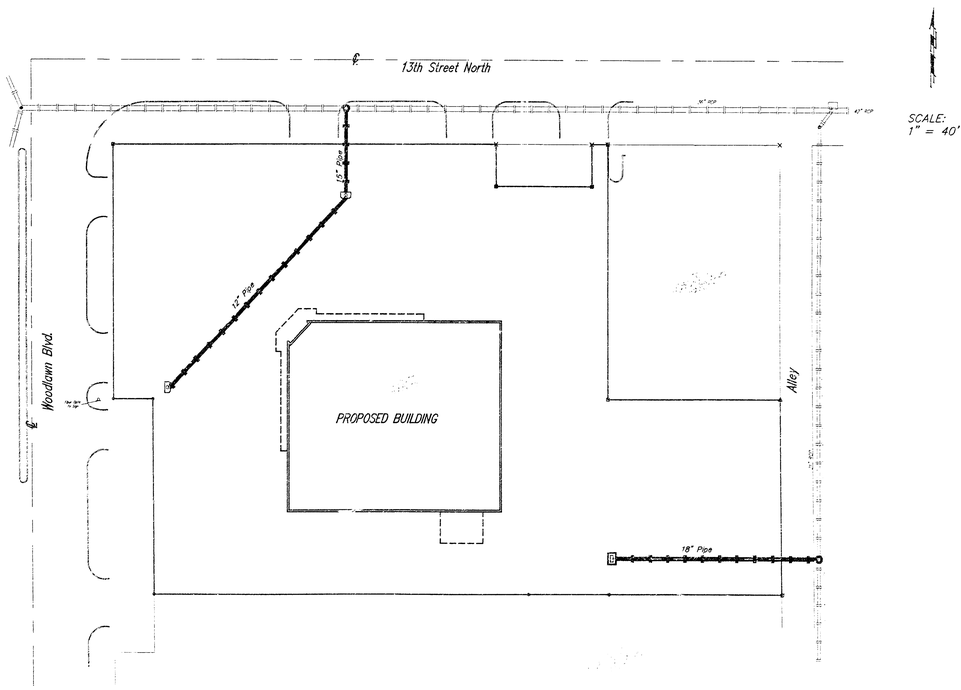

SCALE: 1" = 40'

Location Map

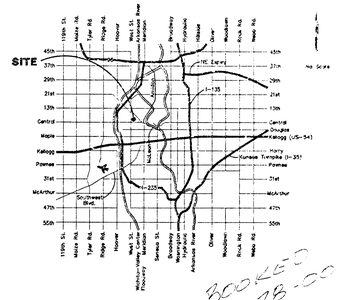

BOOKED 11-28-00 MC D-481

APPROVED AS NOTED
BY CITY ENGINEER OF WICHITA

Storm Sewers V R H 4/7/00

NOTE TO CONTRACTORS

Installation, inspection and testing for this project is to be provided by a Licensed Consulting Engineering Firm under contract with the Owner/Developer. Said inspection to be in accordance with the City of Wichita standard construction engineering practices and certified by a Licensed Professional Engineer. No work shall be performed in dedicated easements or public right-of-way by the Contractor without such inspection nor shall any work be commenced without written authorization by the City Engineer. All Construction and Materials shall comply with the City of Wichita Specifications and Standards (on file and available in the City Engineer's Office).

As Built 9/00 KK

BAUGHMAN COMPANY P. A.
ENGINEERING, SURVEYING, & PLANNING

E 5-2-6

BENCHMARK:

"□" in the south drive of subject property, on the back of walk, elevation = 199.25(City Datum)

Sta. 0+00.0, Begin Line 1. Construct 5' Dia. Standard Manhole Over 36" RCP. Top = 198.39 ~~8.14~~

CAUTION! Southwestern Bell Fiber Optic Line Crossing! Verify Depth!

CAUTION! City of Wichita 16" Water Line Crossing! Verify Depth!

Remove & Repalce Existing Sidewalk Per City of Wichita Specs. (See General Note 6.)

Sta. 0+51.8 Construct Type-1 Inlet (4'-4" X 6'-4") Install Sediment Barrier Per Detail, This Sht. Top = 198.29 ~~7.62~~

Sta. 2+08.8, End of Line 1. Construct Type-1 inlet (4'-4" x 6'-4") Install Sediment Barrier Per Detail, This Sht. Top = 198.25 ~~7.68~~

13TH STREET NORTH

WOODLAWN

Pro. Building F.F.E. 199.80

Pro. Parking Lot

11' Concrete Sidewalk

Ex. Southwestern Bell Fiber Optic

Ex. Building

Building Overhang

Existing Sidewalk To Remain

143.16'

144.74'

144.93'

34.72'

CAUTION! KGS 6" Steel Gas Line Crossing, Probe Depth= 34", Verify Depth!

CAUTION! City of Wichita 8" SS Line Crossing! Verify Depth!

Sta. 0+00.0, Begin Line 1. Construct 4' Dia. Standard Manhole Over 21" RCP. Top = 194.75 ~~4.39~~

Sta. 1+28.4, End Line 2. Construct 2'x4' Drop Inlet w/9" Apron. Install Sediment Barrier Per Detail, This Sht. Top = 195.00 ~~4.90~~

ALLEY

10' Utility Easement (or mutually Agr.)

30' Drive & Utility Easement

10" K.G.S.E. 34" Depth

23.03'

21.49'

21.51'

1.71'

1" = 20' HORIZONTAL
1" = 5' VERTICAL

- ● = P.K. Nail Set
- ○ = #4 Baughman Rebar Found
- □ = #4 Rebar Found
- △ = Chiseled V-Notch Found
- Ø = 1/2" Iron Pipe Found
- ■ = #4 Baughman Rebar Set

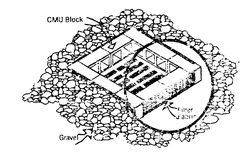

NOTES:
Frequent maintenance is required to maintain depth, circulating and to remove sediment deposits and debris.

Wrap filter fabric around all CMU block and backfill with 2"-3" gravel rock to allow sediment passage.

DO NOT cover inlet or grate with filter fabric.

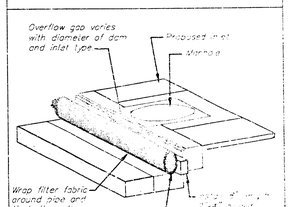

INLET PROTECTION

200
195
190
185

CAUTION! Southwestern Bell Fiber Optic Line Crossing! Verify Depth!

CAUTION! City of Wichita 15" Water Line Crossing! Probe Depth per City = 56", Verify Depth!

Sta. 0+00.0, Begin Line 1. Construct 5' Dia. Standard Manhole Over 36" RCP. Top = 198.39 ~~8.14~~ (Revised to 7.62)

Sta. 0+51.8 Construct Type-1 inlet (4'-4" X 6'-4") Install Sediment Barrier Per Detail, This Sht. Top = 198.20

Sta. 2+08.8 End of Line 1 Construct Type-1 inlet (4'-4" x 6'-4") Install Sediment Barrier Per Detail, This Sht. Top = 198.25 ~~7.68~~ (Revised to 7.68)

51.8 L.F. 15" RCP @ +3.958%

157.0 L.F. 12" PVC @ +1.500%

LINE 1

E Out = 85.16
E IN = 89.99 ~~8.67~~

E Out = 91.68 (Rev. 90.25)
E In = 94.36 (Rev. 90.74) ~~9.37~~

E = 92.02

E = 92.77

E In = 93.32
E In = 93.65 (Rev. 92.50) ~~9.12~~

0+00.0
0+51.8
1+00
1+50
2+00.2+08.8

CAUTION! City of Wichita 8" SS Line Crossing! Verify Depth!

CAUTION! KGS 8" Steel Gas Line Crossing, Probe Depth= 34", Verify Depth!

Sta. 0+00.0, Begin Line 1. Construct 4' Dia. Standard Manhole Over 21" RCP. Top = 194.75 ~~4.39~~

Sta. 1+29.4, End Line 2. Construct 2'x4' Drop Inlet w/9" Apron. Install Sediment Barrier Per Detail, This Sht. Top = 195.00 ~~4.90~~

129.4 L.F. 18" PVC @ +1.000%

LINE 2

E Out = 85.32
E In = 88.20 ~~8.17~~

E = 88.70

E = 89.20

E Out = 180.49 ~~9.85~~

0+00.0
0+50
1+00
1+29.4

As Built 9/20 KK

BENCOR ADDITION

BAUGHMAN COMPANY P.A.
ENGINEERING SURVEYING PLANNING
214 S. MAIN • P.O. BOX 315 • HALSTEAD, KANSAS 67056 • (316) 835-2362

PROJECT NUMBER	SHEET
979 PPS (907881)	2 of 7

DESIGN	DRAWN	APPROVED	DATE	SCALE
NDH	SLC	NDH	2-07	

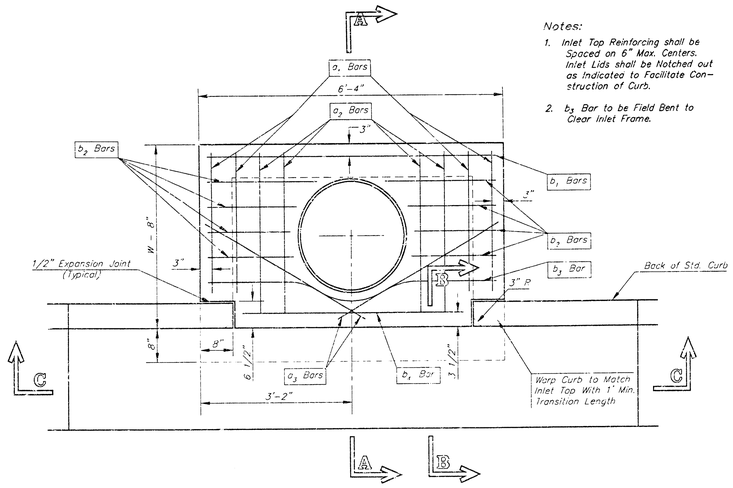

PLAN

Notes:

1. Inlet Top Reinforcing shall be Spaced on 6" Max. Centers. Inlet Lids shall be Notched out as Indicated to Facilitate Construction of Curb.
2. b_3 Bar to be Field Bent to Clear Inlet Frame.

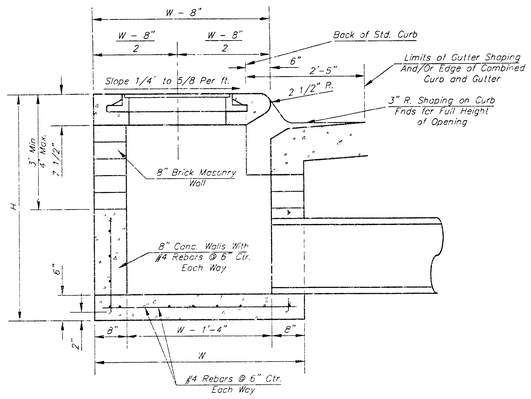

SECTION A–A

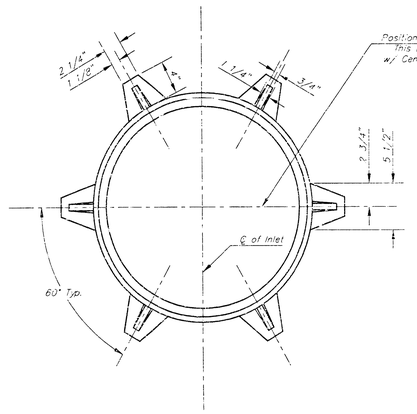

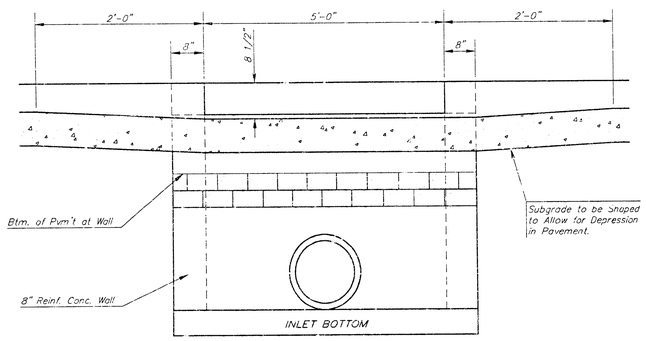

SECTION C–C

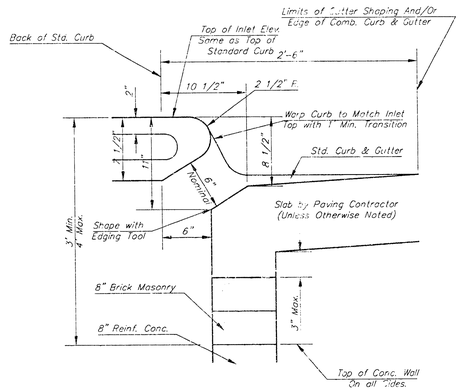

SECTION B–B

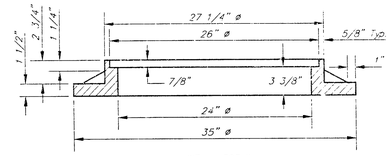

WT. = 325 lbs.

MANHOLE RING AND COVER

*See City of Wichita Standard Manhole Ring and Cover Detail Sheet for Cover Details to Be Used With Inlet Frame.

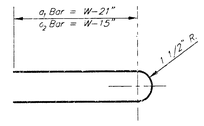

BENDING DIAGRAM

STEEL SCHEDULE

BAR		a_1	a_2	a_3	b_1 W=4'-4"	b_1 W=5'-4"	b_1 W=6'-4"	b_1 W=7'-4"	b_1 W=8'-4"	b_2	b_3	b_4	Wt. Lbs.
NUMBER		4	4	2	1	3	5	7	9	6	1	1	
SIZE		#4	#4	#4	#4	#4	#4	#4	#4	#4	#4	#6	
LENGTH	W=4'-4"	5'-7"	6'-7"	4'-0"	6'-1"	–	–	–	–	1'-9"	6'-2"	4'-8"	60±
	W=5'-4"	7'-7"	8'-7"	5'-0"	–	5'-1"	–	–	–	1'-9"	6'-2"	4'-8"	81±
	W=6'-4"	9'-7"	10'-7"	6'-0"	–	–	6'-1"	–	–	1'-9"	6'-2"	4'-8"	101±
	W=7'-4"	11'-7"	12'-7"	7'-0"	–	–	–	6'-1"	–	1'-9"	6'-2"	4'-8"	121±
	W=8'-4"	13'-7"	14'-7"	8'-0"	–	–	–	–	6'-1"	1'-9"	5'-2"	4'-8"	141±

Note: a_3 Bars to be Placed Approx. 2" Below Top of Inlet Cover.

STANDARD CURB INLET PRECAST TOPS

W	PRE-CAST TOP SIZE	PIPE SIZE	C.Y. YD. CONC
4'-4"	3'-8" 6'-4" 7 1/2"	21" & SMALLER	0.38±
5'-4"	4'-8" 6'-4" 7 1/2"	24" & 30"	0.51±
6'-4"	5'-8" 6'-4" 7 1/2"	36" & 42"	0.64±
7'-4"	6'-8" 6'-4" 7 1/2"	48" & 54"	0.77±
8'-4"	7'-8" 6'-4" 7 1/2"	60" & 66"	0.90±

GENERAL NOTES

1. Concrete tops to be installed on thin mortar cushion to insure full support along brick walls. Concrete tops may be cast in place or precast. Concrete used for inlet construction shall be concrete pavement mix.
2. Contractor shall have the option of constructing 8" brick masonry walls between the concrete inlet base and top on this inlet when W=6'-4" and H=7'-0" or less.
3. Inlet invert shall be shaped with 8 sack sand mix concrete to create flow channels and to increase hydraulic efficiency such that the inlet will be self cleaning between all inlet and/or outlet pipes.
4. The ends of all pipes installed in inlets shall be cut off flush with the inside face of the inlet wall.

Revised – Dec. 21, 1984

TYPE 1 CURB INLET

BAUGHMAN COMPANY P.A.
ENGINEERING, SURVEYING & PLANNING
316-262-7291 • 545 N. MAIN • WICHITA, KANSAS 67203

PROJECT NUMBER	SHEET
979 PPS (907661)	3
	OF 7

DESIGN	DRAWN	APPROVED	DATE	SCALE
D.G.W.	STAFF	DGW	10/15/79	NONE

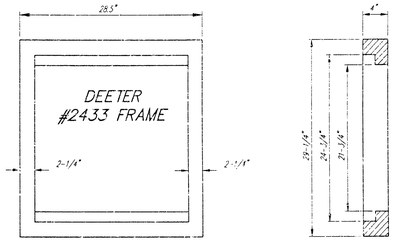

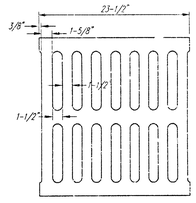

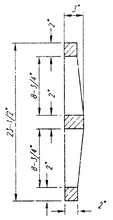

DEETER #2433 GRATE

24" x 24" Frame and Grate Detail

NOTE: Grates shall be imprinted on the top surface with "CITY OF WICHITA" using letters at least 1" in height. Other marking methods may be approved by the engineer.

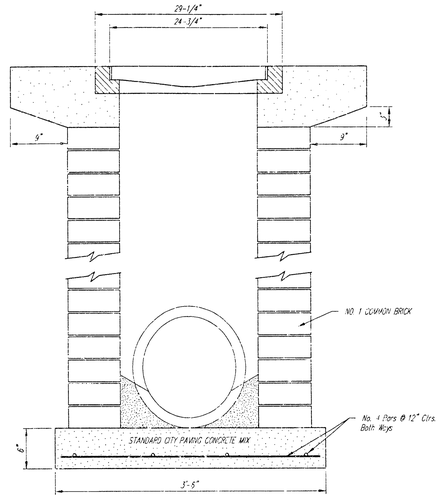

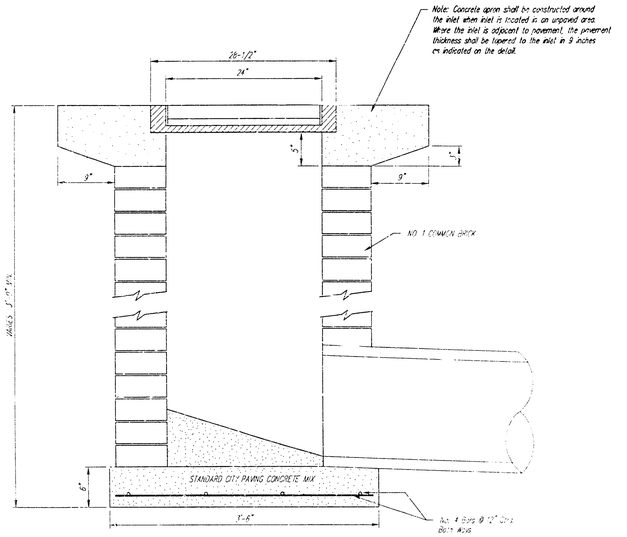

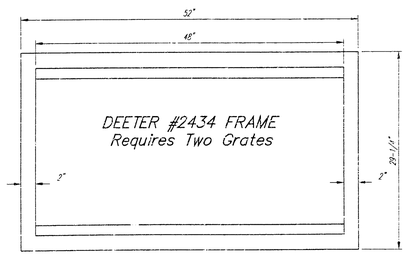



Double 24" x 24" Frame Detail

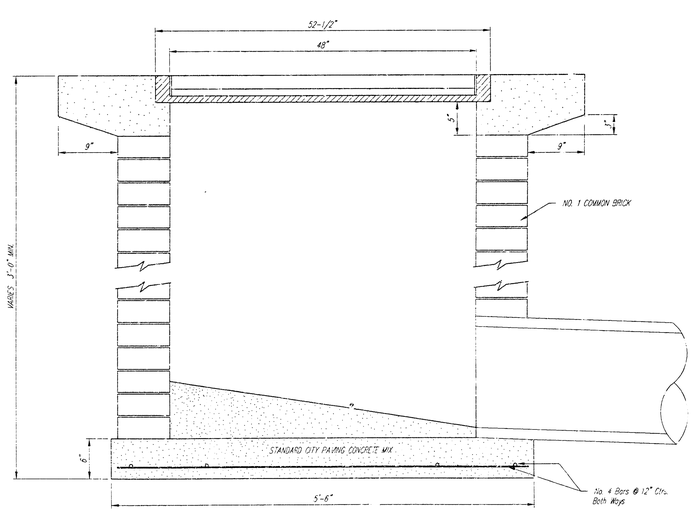

Drop Inlet

BAUGHMAN COMPANY P.A.

PROJECT NUMBER
378 PPS (107691)

SHEET 4 OF 7

DESIGN	DRAWN	APPROVED	DATE	SCALE
C.O.W.	Staff	NEW	5/00	NONE

SEWER APPURTENANCES DETAILS

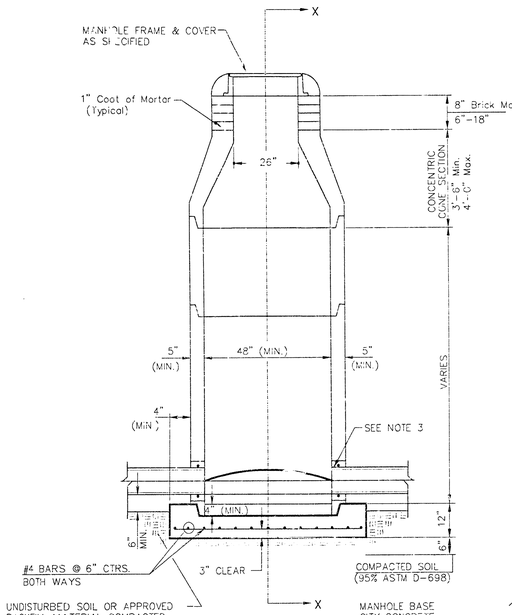

TYPE P
STANDARD MANHOLE

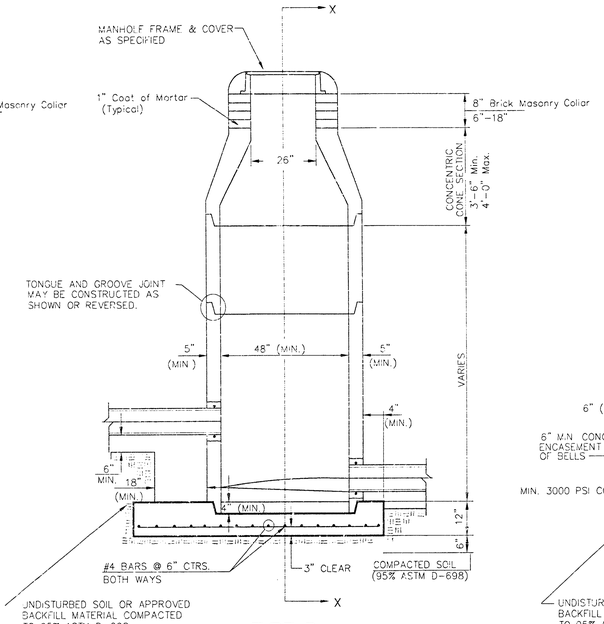

TYPE P
INSIDE DROP MANHOLE

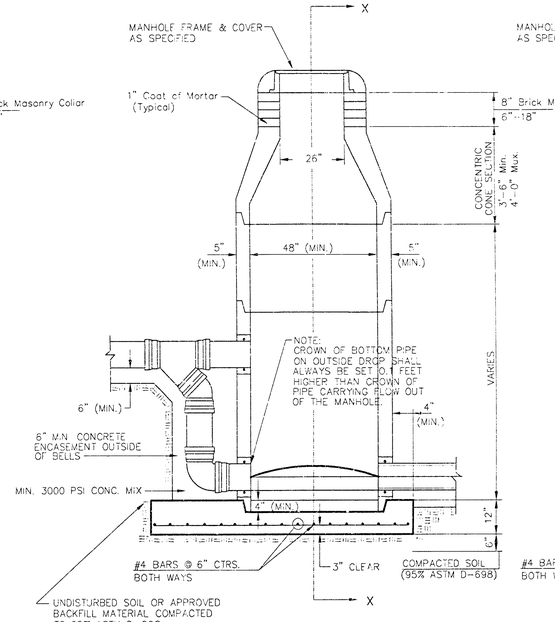

TYPE P
OUTSIDE DROP MANHOLE

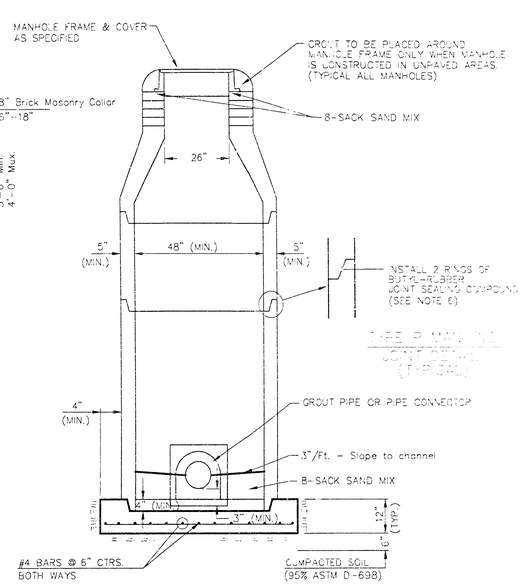

SECTION X
(TYPICAL)

GENERAL NOTES

PRECAST MANHOLE NOTES

1. ALL PRECAST CONCRETE MANHOLE SECTIONS SHALL CONFORM TO THE LATEST REVISIONS OF A.S.T.M. C478 AS MODIFIED BY THE SPECIFICATIONS.
2. NON-SHRINK GROUT SHALL BE NON-METALLIC TYPE.
3. APPROVED FLEXIBLE WATERSTOP GASKETS SHALL BE INSTALLED TO JOIN THE SEWER TO THE MANHOLE WALL WHEN A.B.S. COMPOSITE PIPE OR P.V.C. PIPE IS USED. FOR OTHER TYPES OF PIPE THE SEWER SHALL BE GROUTED IN PLACE WITH NON-SHRINK GROUT. THE SEWER PIPE SHALL BE SUPPORTED WITH CONCRETE ENCASEMENT A MINIMUM OF 3 FEET FROM THE MANHOLE WALL AND TO THE FIRST JOINT FOR V.C.P. SUCH THAT THE JOINT REMAINS FLEXIBLE.
4. ALL INSIDE SURFACES OF THE CONCRETE MANHOLE WHICH WOULD BE EXPOSED TO SEWER GAS SHALL BE COATED WITH 2 COATS TNEMEC SERIES 66 HI-BUILD EPOXOLINE, DRY THICKNESS OF 8 MILS (MIN.)
5. EXTERIOR MANHOLE WALLS SHALL BE COATED WITH 1 COAT MOBILARMA 633 BITUMINOUS COATING.
6. JOINT SEALING COMPOUND SHALL BE KENT SEAL NO. 2 OR APPROVED EQUAL.
7. PRECAST MANHOLES SHALL BE SET AT LEAST 4 INCHES INTO THE MANHOLE BASE.
8. TOP OF MANHOLE FLOOR SLAB SHALL BE AT LEAST 3 INCHES BELOW THE FLOW LINE OF THE OUTLET PIPE TO INSURE SUFFICIENT MINIMUM THICKNESS OF SHAPED INVERT.
9. LIFTING HOLES SHALL BE FILLED WITH NON-SHRINK GROUT AND THE INTERIOR SURFACE COATED AS SPECIFIED.
10. MORTAR USED IN MASONRY CONSTRUCTION SHALL CONTAIN 8 SACKS OF CEMENT PER CUBIC YARD. CONCRETE USED IN MANHOLE BASES SHALL CONFORM TO THE REQUIREMENTS OF CONCRETE FOR CONCRETE PAVEMENT CONSTRUCTION AS SPECIFIED IN THE CITY STANDARD PAVING SPECIFICATIONS USING CITY CONCRETE PAVEMENT MIX WITHOUT AIR ENTRAINING ADMIXTURE. MORTAR SHALL BE PLACED AROUND THE MANHOLE RING AS SHOWN ON THE DRAWINGS WHEN MANHOLES ARE CONSTRUCTED IN UNPAVED AREAS. MANHOLES CONSTRUCTED WHERE PIPE SIZES ARE SMALLER THAN 24" SHALL HAVE AN INSIDE DIAMETER OF 4'. MANHOLES CONSTRUCTED WHERE PIPE SIZES ARE 24" OR LARGER SHALL HAVE AN INSIDE DIAMETER OF 5'. COMPLETED MANHOLE SHALL BE WITHOUT LEAKS AND WATER TIGHT.
11. REINFORCING STEEL SHALL BE INSTALLED IN THE MANHOLE BASES AND SHALL CONSIST OF NO. 4 BARS PLACED ON 6" CENTERS IN BOTH DIRECTIONS. THE MANHOLE BASE REINFORCEMENT SHALL BE PLACED AT LEAST 3" ABOVE THE BOTTOM OF THE MANHOLE BASE. ALL COSTS FOR FURNISHING AND INSTALLING REINFORCING STEEL SHALL BE INCLUDED IN THE UNIT PRICE BID FOR THE MANHOLE.
12. OPENINGS SHALL BE CUT INTO THE MANHOLE WALL WHEN OUTSIDE DROPS ARE CONSTRUCTED ON EXISTING MANHOLES. SUCH OPENINGS CUT INTO EXISTING MANHOLES SHALL BE AS SMALL AS PRACTICAL TO FACILITATE INSTALLING AND GROUTING THE NEW PIPE IN PLACE. WATERSTOP GASKETS SHALL BE USED WITH P.V.C. AND A.B.S. COMPOSITE PIPE. THE NEW PIPE SHALL BE GROUTED INTO THE OPENING USING AN APPROVED NON-SHRINK GROUT FOR THE FULL MANHOLE WALL THICKNESS. THE EXTERIOR OF THE COMPLETED CONNECTION SHALL BE SEALED WITH AN APPROVED BITUMINOUS COATING SUCH THAT THE CONNECTION WILL BE WATER TIGHT. FLOOR OF MANHOLE SHALL BE MODIFIED TO FORM NEW FLOW CHANNEL FOR THE NEW CONNECTION AS INDICATED BY THE DRAWING. THIS WORK, INCLUDING MODIFICATION OF MANHOLE FLOOR, SHALL BE PAID FOR AT THE UNIT PRICE BID FOR OUTSIDE DROP STACK CONSTRUCTED ON EXISTING MANHOLE.
13. THE FLOORS OF ALL MANHOLES SHALL BE SHAPED WITH FLOW CHANNELS SUCH THAT THE MANHOLES WILL BE SELF CLEANING AND FREE OF AREAS WHERE SOLIDS COULD BE DEPOSITED AS SEWAGE FLOWS THROUGH THE MANHOLE FROM ALL INLET PIPES TO THE OUTLET PIPE. FLOW CHANNELS SHALL BE FORMED TO MATCH THE BOTTOM HALVES OF THE INFLOWING PIPES AND THE OUTFLOWING PIPE AS SHOWN BY THE DRAWINGS EXCEPT FOR INSIDE DROP MANHOLES. FLOW CHANNELS FOR INSIDE DROP MANHOLES SHALL BE CONSTRUCTED AS INDICATED BY THE DRAWING. MANHOLE FLOORS SHALL HAVE SLOPES OF 3 INCHES PER FOOT IN THE AREAS OUTSIDE OF THE FLOW CHANNELS SLOPED TOWARD THE FLOW CHANNELS. PIPES LAID THROUGH MANHOLES SHALL HAVE THE TOP HALF REMOVED TO NEAT LINES FOR THE FULL INSIDE DIAMETER OF THE MANHOLE. MANHOLE FLOORS SHALL THEN BE SHAPED AROUND THE BOTTOM HALF OF THE PIPE WHICH FORMS THE FLOW CHANNEL.
14. PIPES INSTALLED WITHIN THE EXCAVATION MADE FOR THE MANHOLE SHALL BE CRADLED WITH CONCRETE TO THE LIMITS OF THE MANHOLE EXCAVATION. WHEN CLAY PIPE IS USED, THE CRADLE SHALL EXTEND TO THE FIRST JOINT OUTSIDE THE MANHOLE. THE CRADLE SHALL BE TERMINATED AT THE CLAY PIPE JOINT IN A MANNER WHICH WILL MAINTAIN THE FLEXIBILITY OF THE JOINT. COST OF CRADLE WITHIN MANHOLE EXCAVATION OR TO CLAY PIPE JOINTS ADJACENT TO MANHOLE SHALL BE INCLUDED IN THE UNIT PRICE BID FOR THE MANHOLE.
15. MANHOLE COVER CASTINGS AND MANHOLE FRAME CASTINGS SHALL CONFORM TO THE REQUIREMENTS AS INDICATED IN THE STANDARD SPECIFICATIONS AND AS SHOWN IN THE STANDARD DETAIL DRAWING.
16. THE VERTICAL DROP IN INSIDE DROP MANHOLES SHALL NOT EXCEED 2' FOR INFLOWING PIPES SIZED 12" OR SMALLER AND 2' FOR INFLOWING PIPES LARGER THAN 12". THE CROWNS OF INFLOWING PIPES SHALL NEVER BE SET LOWER THAN THE CROWN OF THE OUTFLOWING PIPE.
17. STANDARD MANHOLES AND STANDARD INSIDE DROP MANHOLES SHALL BE BID AS STANDARD MANHOLES FOR THE TYPE AND DIAMETER INDICATED. OUTSIDE DROP MANHOLES SHALL BE BID AS STANDARD OUTSIDE DROP MANHOLES FOR THE TYPE AND DIAMETER INDICATED. ALL MANHOLE DIAMETERS WILL BE 4' UNLESS INDICATED OTHERWISE.
18. A BRICK MASONRY COLLAR SHALL BE INSTALLED BETWEEN THE CAST IRON FRAME AND THE CONCENTRIC CONE. THE COLLAR WILL HAVE 8" WALLS AND A VERTICAL HEIGHT OF 6" MINIMUM AND 18" MAXIMUM. A 1" COAT OF MORTAR WILL BE PLASTERED ON THE OUTSIDE OF THE COLLAR. THE USE OF PRE-CAST CONCRETE SPACERS FOR MANHOLE TOP ADJUSTMENT IS ALSO ALLOWED.

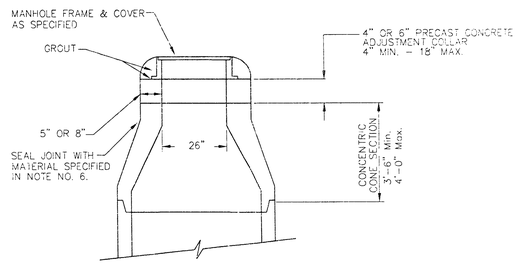

ALTERNATE CONSTRUCTION
IN UNPAVED AREAS

STD. MANHOLE DETAILS

BAUGHMAN COMPANY P.A.
ENGINEERING, SURVEYING, PLANNING
316-267-7271 • 316 ELLIS • WICHITA, KANSAS 67211

PROJECT NUMBER 979 PPS (807981)

SHEET 5 OF 7

DESIGN	DRAWN	APPROVED	DATE	SCALE
STAFF	STAFF	MBW	4/00	NONE

MANHOLE FRAME AND COVER DETAIL

ADOPTED AS STANDARD DESIGN BY
CITY OF WICHITA, KANSAS

MANHOLE COVER
Weight = 180 Lbs.

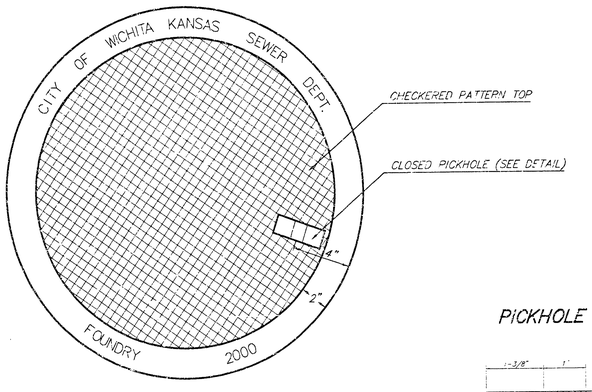

TOP VIEW

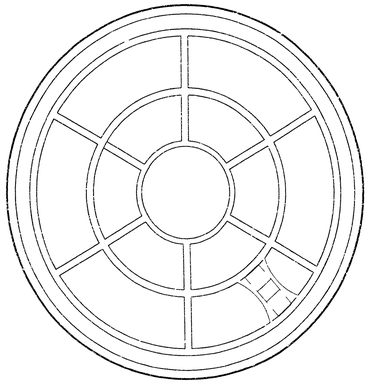

BOTTOM VIEW

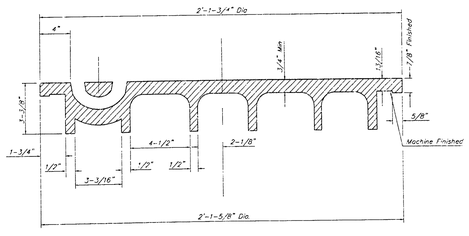

SECTION VIEW

PICKHOLE DETAIL

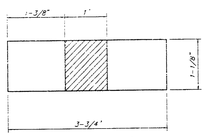

TOP VIEW

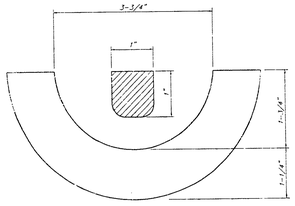

SECTION VIEW

MANHOLE FRAME
Weight = 145 Lbs.

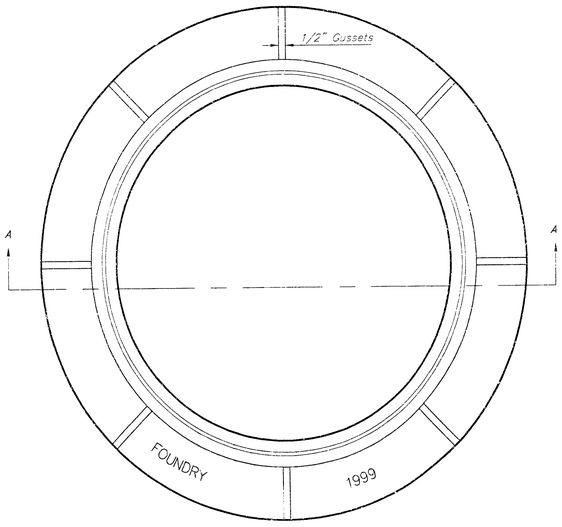

TOP VIEW

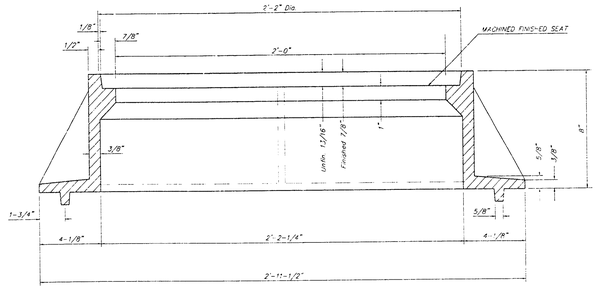

SECTION A–A

GENERAL NOTES

MANHOLE CASTINGS SHALL BE MANUFACTURED USING GOOD QUALITY GRAY IRON CONFORMING TO CLASS 30 OF A.S.T.M. DESIGNATION A-48. DIMENSIONS AND WEIGHTS SHOWN ON THE DETAILED DRAWINGS SHALL BE CONSIDERED AS MINIMUM REQUIREMENTS AND ANY DEVIATIONS FROM THE DIMENSIONS SHOWN MUST BE SPECIFICALLY APPROVED. THE FINISHED CASTINGS SHALL BE OF UNIFORM QUALITY, FREE FROM BLOWHOLES, POROSITY, HARD SPOTS, SHRINKAGE DISTORTIONS OR OTHER DEFECTS.

MANHOLE CASTINGS SHALL BE COATED WITH AN ASPHALT PAINT RESULTING IN A SMOOTH, TOUGH AND TENACIOUS COATING WHICH IS NOT BRITTILE OR TACKY.

MANHOLE CASTINGS SHALL BE MANUFACTURED SUCH THAT A COVER MANUFACTURED BY ANY ONE FOUNDRY WILL FIT INTERCHANGEABLY INTO A FRAME MANUFACTURED BY ANOTHER FOUNDRY AND STILL MEET ALLOWABLE CLEARANCES AND NON-ROCKING REQUIREMENTS. THIS WILL REQUIRE MANUFACTURING OF THE MATCHING FACES ON THE COVER AND THE FRAME TO CLOSE TOLERANCES.

THE OUTSIDE CIRCUMFERENCE OF THE VERTICAL FACE OF THE COVER AND THE INSIDE CIRCUMFERENCE OF THE VERTICAL FACE IN THE FRAME RECESS SHALL BE MANUFACTURED TO TOLERANCES SUCH THAT THE CLEARANCE BETWEEN THE COVER AND FRAME WILL NOT EXCEED 1/8" AT ANY POINT AROUND THE CIRCUMFERENCE OF THE COVER. THE SEATING SURFACES BETWEEN THE COVER AND FRAME SHALL BE MACHINED SUCH AS THESE SURFACES SHALL MAKE FULL CONTACT FOR THEIR FULL CIRCUMFERENCE TO PRECLUDE THE COVER FROM ROCKING IN THE FRAME.

THE MANHOLE FRAME AND COVER SHALL BE MARKED WITH LETTERING INDICATING THE NAME OF THE MANUFACTURER AND THE YEAR WHEN THE COVER OR FRAME WAS CAST. THE COVER SHALL BE FURTHER IDENTIFIED WITH REGARDS TO OWNERSHIP USING LETTERS AT LEAST 1 INCH IN HEIGHT. THIS IDENTIFICATION SHALL BE "CITY OF WICHITA SEWER DEPARTMENT". THE WORD DEPARTMENT MAY BE ABBREVIATED. THE TEXTURE OF THE TOP SURFACE OF THE COVER SHALL BE MANUFACTURED IN A CHECKERED PATTERN DESIGN AS INDICATED ON THE DRAWINGS. SMOOTH BLOCKOUTS SHALL BE UTILIZED TO HIGHLIGHT THE LETTERING ON THE COVER SURFACE. THE TOTAL AREA OF SMOOTH SURFACE BLOCKOUT SHALL NOT EXCEED THE AREA AS INDICATED ON THE DRAWING. POSITIONING OF SMOOTH BLOCKOUTS AND LETTERING MAY VARY FROM THAT SHOWN ON THE DETAILED DRAWING.

ADOPTED AS STANDARD DESIGN BY

BAUGHMAN COMPANY P.A.
ENGINEERING, SURVEYING, ARCHITECTURE

PROJECT NUMBER	SHEET
978 PPS (607881)	6 OF 7

DESIGN	DRAWN	APPROVED	DATE	SCALE
STAFF	STAFF		04/99	

BENCOR ADDITION
WICHITA, SEDGWICK COUNTY, KANSAS

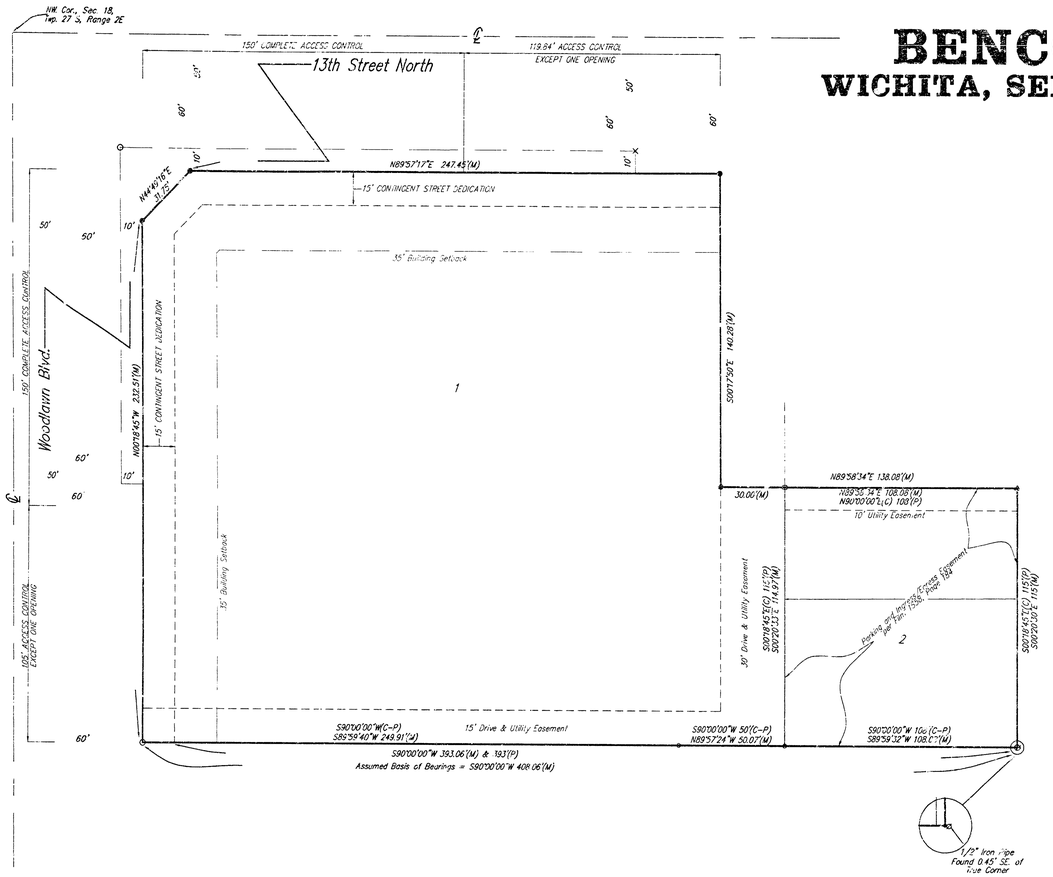

0 30 60

- ● = #4 Baughman Rebar Set
- ○ = #4 Baughman Rebar Found
- □ = #4 Rebar Found
- △ = Chiseled V-Notch Found
- X = Chiseled Cross Found
- Ø = 1/2" Iron Pipe Found
- ⊠ = Chiseled Cross Set

SITE BENCHMARK: "□" in the south drive of subject property, on the back of walk, elevation = 199.28'(City Datum)

NOTE:
A DRAINAGE PLAN HAS BEEN DEVELOPED FOR THIS SUBDIVISION AND IS ON FILE WITH THE CITY OF WICHITA, KANSAS. DRAINAGE INTENT SHALL REMAIN AS DEPICTED OR AS MODIFIED WITH THE APPROVAL OF THE CITY ENGINEER OF THE CITY OF WICHITA, KANSAS. NO OBSTRUCTIONS WHICH IMPEDE THE FLOW OF THIS DRAINAGE PLAN SHALL BE ALLOWED.

State of Kansas) SS
Sedgwick County)

We, Baughman Company, P.A., Surveyors in aforesaid county and state do hereby certify that we have surveyed and platted "BENCOR ADDITION", Wichita, Sedgwick County, Kansas and that the accompaning plat is a true and correct exhibit of the property surveyed, described as all of Lots 3 and 4, Highland Square Addition, Wichita, Kansas, Sedgwick County, Kansas; together with Lot 2 EXCEPT the east 30 feet thereof, in said Highland Square Addition; together with the north 150 feet of the west 150 feet of Lot 10, Block 3, Fourth Addition to Pine Valley Estates, Sedgwick County, Kansas, together with the south 15 feet of 13th Street right-of-way adjacent to the north line of Lot 2, EXCEPT the east 30 feet thereof, in said Highland Square Addition; and together with the east 15 feet of Woodlawn Blvd. right-of-way adjacent to the west line of Lot 4 in said Highland Square Addition.

Existing easements and dedications being vacated by virtue of K.S.A. 12-512(b).

Baughman Company, P.A.

_____ Surveyor
Michael G. Conrey

Know all men by these presents that we, the undersigned, have caused the land in the surveyors certificate to be platted into Lots, and Streets, to be known as "BENCOR ADDITION", Wichita, Sedgwick County, Kansas. The utility easements are hereby granted as indicated for the construction and maintenance of all public utilities. The drive and utility easements as indicated is hereby granted for the private use and benefit of the owners and leasees of the lots in the addition and their suppliers, customers, and other invitees and such private easements shall be improved and maintained by the owners of the Lots in the addition and such cost shared according to the number of square feet in each lot in relation to the total square feet in the addition. The streets are hereby dedicated to and for the use of the public. All abutters rights of access to or from 13th Street North over and across the north line of Lot 1, are hereby granted to the City of Wichita, Kansas provided, however, that said Lot 1 shall have access to 13th Street North over the east 119.84' of the north line of said Lot 1. All abutters rights of access to or from Woodlawn Blvd. over and across the west line of Lot 1, are hereby granted to the City of Wichita, Kansas, provided, however, that said Lot 1 shall have access to Woodlawn Blvd. over the south 105' of the west line of said Lot 1. The 15' contingent street dedication along 13th Street North and along Woodlawn Blvd. shall become effective in the event that the City of Wichita determines a need for the right-of-way for any street related purposes. This contingent dedication shall be a covenant running with the land and shall be binding on all heirs and subsequent owners of all parts of said property covered by said dedication.

Bencor/Woodlawn13, L.L.C.

_____, Member
Benjamin T. Horton

State of Kansas) SS
Sedgwick County)

The foregoing instrument acknowledged before me, this ____ day of _____, 2000, by Benjamin T. Horton, Member of Bencor/Woodlawn13, L.L.C., on behalf of the limited liability company.

_____ Notary Public

My App't. Exp. _____

We the undersigned holders of a mortgage on the above described property, do hereby consent to this plat of "BENCOR ADDITION", Wichita, Sedgwick County, Kansas.

Fidelity Bank

_____, _____

State of Kansas) SS
Sedgwick County)

The foregoing instrument acknowledged before me, this ____ day of _____, 2000, by _____, _____ of Fidelity Bank, on behalf of the bank.

_____, Notary Public

My App't. Exp. _____

This plat of "BENCOR ADDITION", to Wichita, Sedgwick County, Kansas has been submitted to and approved by the Wichita-Sedgwick County Metropolitan Area Planning Commission, Wichita, Kansas.

Dated this ____ day of _____, 2000.
Wichita-Sedgwick County Metropolitan Area Planning Commission

_____ Chairman
Francis S. Garofalo

_____ Secretary
Marvin S. Krout

This plat approved and all dedications shown hereon accepted by the City Council of the City of Wichita, Kansas, this ____ day of _____, 2000.

_____ Mayor
Bob Knight

_____ City Clerk
Pat Burnett

Reviewed in accordance with K.S.A. 58-2005 on this ____ day of _____, 2000.

_____
Tricia L. Robello, L.S. #1246
Deputy County Surveyor
Sedgwick County, Kansas

Entered on transfer record this ____ day of _____, 2000.

_____ County Clerk
James Alford

State of Kansas) SS
Sedgwick County)

This is to certify that this plat has been filed for record in the office of the Register of Deeds, this ____ day of _____, 2000 at ____ o'clock __M; and is duly recorded.

_____ Register of Deeds
Bill Meek

_____ Deputy
Linda Kizzire

6 MARCH 1953

BAUGHMAN COMPANY P.A.
ENGINEERS, SURVEYORS, & PLANNERS
316-262-7271 • 315 E. 2nd • WICHITA, KANSAS 67202

00 80 50 81

DATED - 15 AUGUST 2000