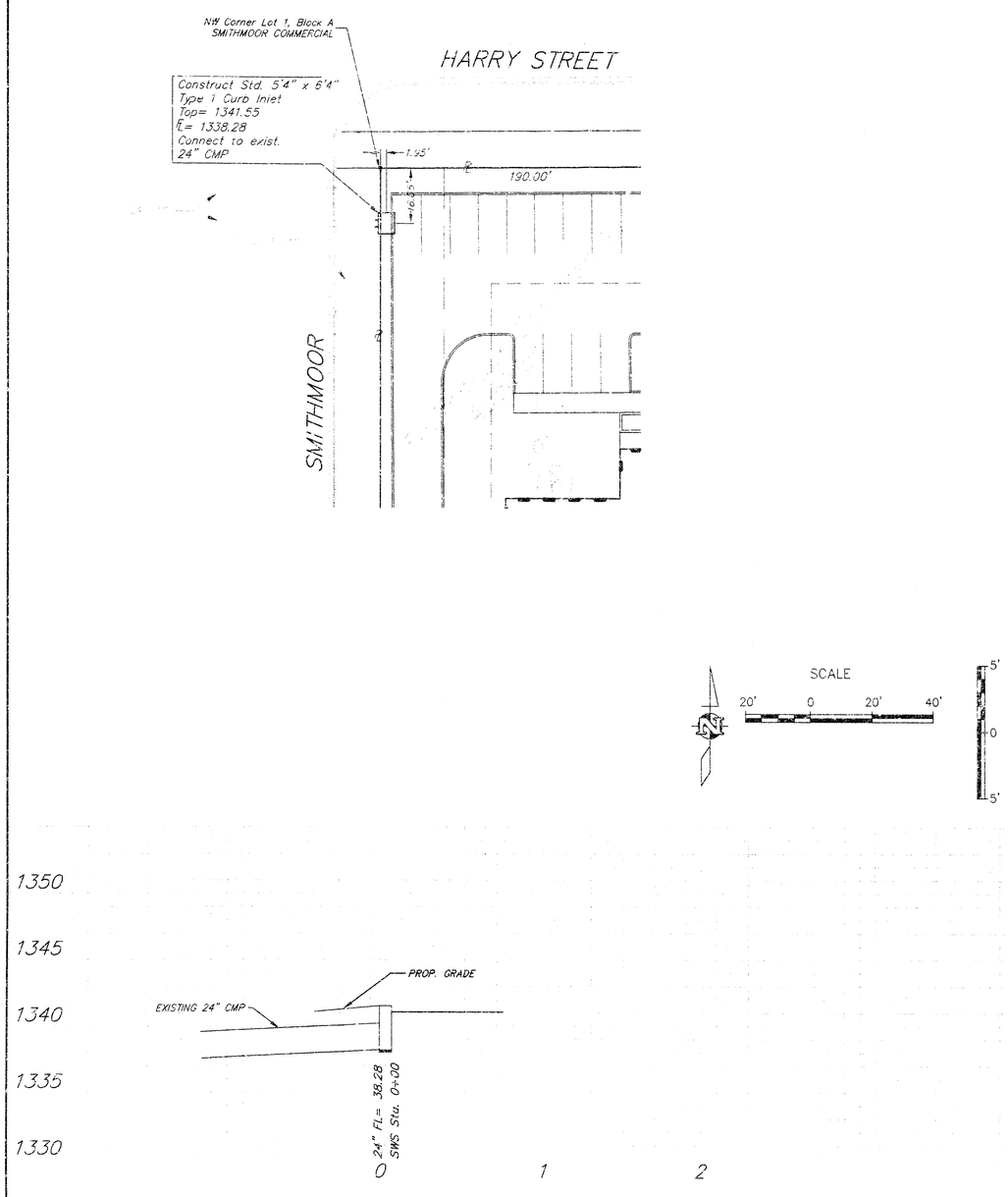

STORMWATER SEWER IMPROVEMENTS TO SERVE
Lot 1 of Block A, Smithmoor Commercial Addition
WEIGAND OFFICE

Project Number
983 PPS (607861)

CITY OF WICHITA, KANSAS

Michael E. Lindebak, P. E., City Engineer

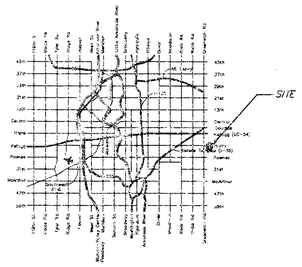

LOCATION MAP

BENCHMARK:

City of Wichita Disk on SW Corner of Base of Traffic Signal at NE Corner of Intersection of Harry Street and Greenwich Road
Elev.= 1343.83

APPROVED AS NOTED BY CITY ENGINEER OF WICHITA

STORM SEWERS VRH 2/29/00

Inspection and testing for this project are to be provided by a Licensed Consulting Engineering Firm under contract with the Owner/Developer. Said inspection is to be in accordance with the City of Wichita standard construction engineering practices and certified by a Licensed Prof Engineer. No work shall be performed in dedicated easements or public right-of-way by the Contractor without such inspection nor shall work be commenced without written authorization by the City Engineer. All construction and materials shall comply with the City of Wichita Specifications and Standards (on file and available in the City Engineer's Office).

GENERAL NOTES

1. Contractor will be required to provide notice to utility companies a minimum of twenty-four (24) hours prior to any excavation, as follows:

Kansas One-Call	687-2470

The Contractor must notify the following in case of an emergency:

Cablevision	262-4270
or	263-2061
K.P.L. Gas Service Company	383-8650
Kansas Gas & Electric Company	383-8600
Peoples Natural Gas	942-8811
or	1-800-303-0357
Southwestern Bell Telephone Company	1-571-2611
City of Wichita Water Department	268-4908
City of Wichita Sewer Department	268-4071

2. Exist. utilities and their locations, as shown on the plans, represent the best information obtainable for design. Location information has been obtained from the various utility companies and is either from company record drawings or company-provided field locations. The Contractor will be required to work around existing utilities which do not conflict with proposed construction.

3. The Contractor to verify utility locations prior to construction of this project.

4. Utility service and installation shall be coordinated with the respective utility owners. Contacts are:

KG&E Gas	Steve Orth	261-6867
K.G. & E.	Miles Capps	261-6434
Wichita Water	Paul Bryant	268-4555
	Steve Palmer	268-4908
Southwestern Bell	Jim Tobin	268-2759

5. All areas disturbed by construction shall be seeded with rye Rebel II Fescure grass at a rate of 350 lbs./acre immediately following construction in that area.

6. Traffic affected by the construction of this project shall be handled in accordance with the latest edition of the Manual on Uniform Traffic Control Devices.

7. All lawn/turf areas disturbed by construction of proposed improvements shall be restored with the same grass/ sod as existing. Restoration of disturbed areas shall include, but not be limited to, top soil preparation, seeding, mulch and/or reseeding. All seeding/sodding work shall be in accordance with the City of Wichita standard specifications and the City of Wichita administrative regulation No. AR78 which governs cleanup and replacement following construction. All costs for this work shall be subsidiary to the lump sum price bid for "Site Restoration."

KIRK E. MILLER LICENSED PROFESSIONAL ENGINEER 2/25/00 KANSAS

316/262-1281	PROJECT NUMBER 983 PPS (607861)				AM. NO. 99322	WEIGAND OFFICE SWS & PROFILE Wichita, Kansas	SHEET 1 OF 2
	DESIGN DK	DRAWN RY	FILE swspp1	DATE 02/00	SCALE 1"=20"		REVISED

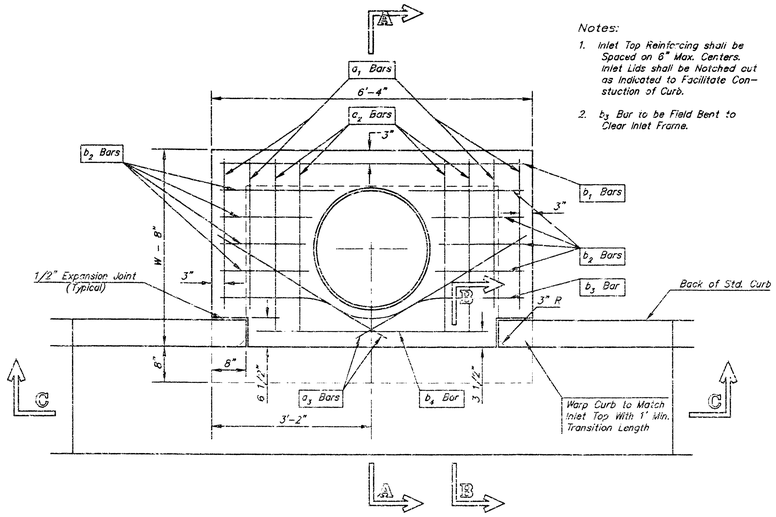

PLAN

Notes:

1. Inlet Top Reinforcing shall be Spaced on 6" Max. Centers. Inlet Lids shall be Notched out as Indicated to Facilitate Construction of Curb.
2. b_3 Bar to be Field Bent to Clear Inlet Frame.

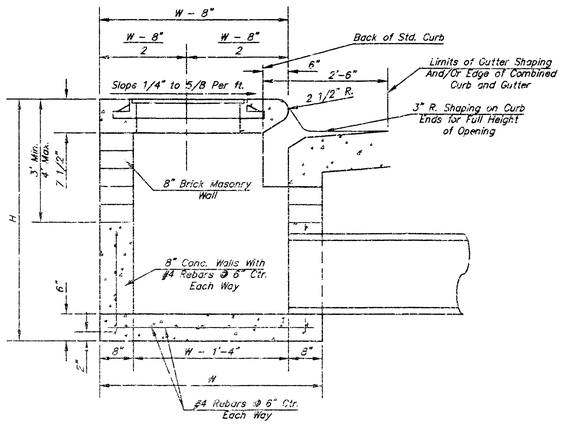

SECTION A-A

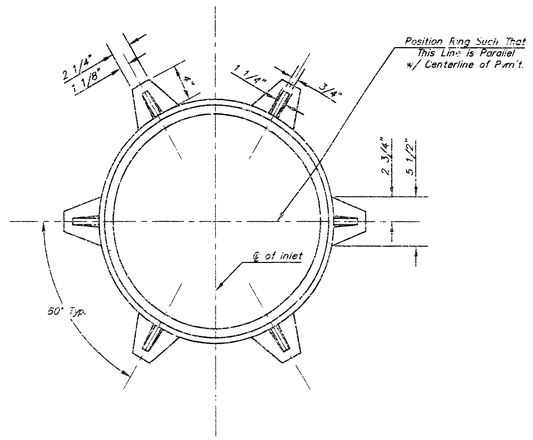

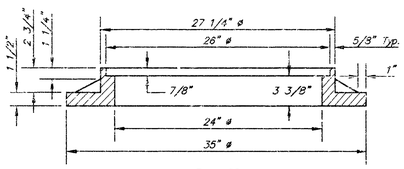

WT. = 180 lbs.

MANHOLE RING AND COVER

*See City of Wichita Standard Manhole Ring and Cover Detail Sheet for Cover Details to Be Used With Inlet Frame.

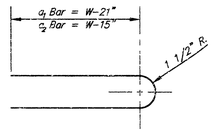

BENDING DIAGRAM

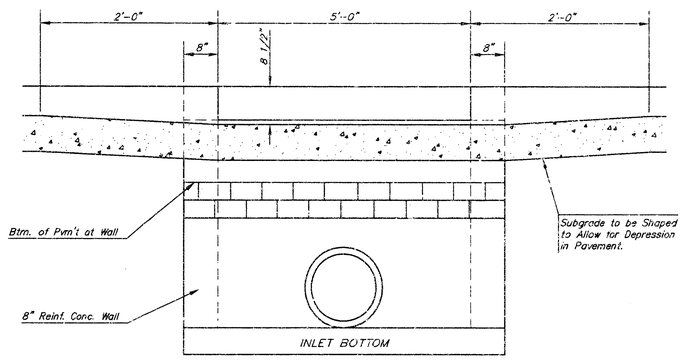

SECTION C-C

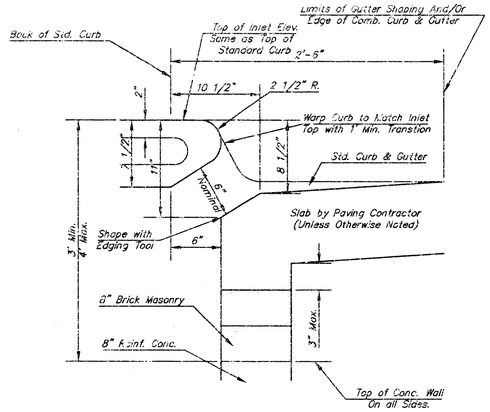

SECTION B--B

STEEL SCHEDULE

BAR		a_1	a_2	a_3	b_1					b_2	b_3	b_4	Wt. Lbs.
					#=4'-4"	#=5'-4"	#=6'-4"	#=7'-4"	#=8'-4"				
NUMBER		4	4	2	1	3	5	7	9	6	1	1	
SIZE		#4	#4	#4	#4	#4	#4	#4	#4	#4	#4	#6	
LENGTH	W=4'-4"	5'-7"	6'-7"	4'-0"	6'-1"	–	–	–	–	1'-9"	6'-2"	4'-8"	60±
	W=5'-4"	7'-7"	8'-7"	5'-0"	–	6'-1"	–	–	–	1'-9"	6'-2"	4'-8"	81±
	W=6'-4"	9'-7"	10'-7"	6'-0"	–	–	6'-1"	–	–	1'-9"	6'-2"	4'-8"	101±
	W=7'-4"	11'-7"	12'-7"	7'-0"	–	–	–	6'-1"	–	1'-9"	5'-2"	4'-8"	121±
	W=8'-4"	13'-7"	14'-7"	8'-0"	–	–	–	–	6'-1"	1'-9"	6'-2"	4'-8"	141±

Note: a_3 Bars to be Placed Approx. 2" Below Top of Inlet Cover.

STANDARD CURB INLET PRECAST TOPS			
W	PRE-CAST TOP SIZE	PIPE SIZE	CU. YD. CONC.
4'-4"	3'-8" 6'-4" 7 1/2"	21" & SMALLER	0.38±
5'-4"	4'-8" 6'-4" 7 1/2"	24" & 30"	0.51±
6'-4"	5'-8" 6'-4" 7 1/2"	36" & 42"	0.64±
7'-4"	6'-8" 6'-4" 7 1/2"	48" & 54"	0.77±
8'-4"	7'-8" 6'-4" 7 1/2"	60" & 66"	0.90±

GENERAL NOTES

1. Concrete tops to be installed on thin mortar cushion to insure full support along brick walls. Concrete tops may be cast in place or precast. Concrete used for inlet construction shall be concrete pavement mix.
2. Contractor shall have the option of constructing 8" brick masonry walls between the concrete inlet base and top on this inlet when W=6'-4" and H=7'-0" or less.
3. Inlet invert shall be shaped with 8 sack sand mix concrete to create flow channels and to increase hydraulic efficiency such that the inlet will be self cleaning between all inlet and/or outlet pipes.
4. The ends of all pipes installed in inlets shall be cut off flush with the inside face of the inlet wall.

THE CITY OF WICHITA

CITY ENGINEER'S OFFICE
CITY HALL - SEVENTH FLOOR
455 NORTH MAIN STREET
WICHITA, KANSAS 67202
(316) 268-4501
(316) 268-4114 FAX

STANDARD TYPE 1 CURB INLET

OPENING = 6" x 5'-0"

M. E. LINDEBAK P.E. - CITY ENGINEER

PROJECT NUMBER	INDEX CODE
983 PPS (607861)	XXXXXX
DATE	SHEET 2 OF 2
MAR 96	

STYP1-S.DWG

10 10 10 AP