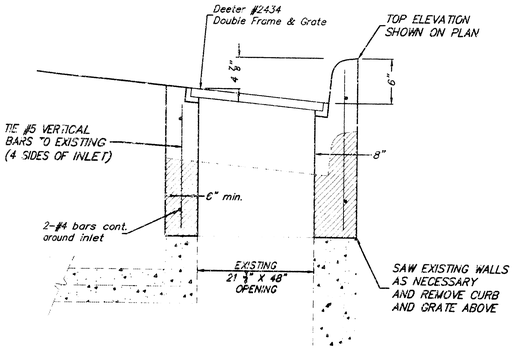

CURB INLET ADJUSTMENT DETAIL

BENCHMARK:
"□" CUT ON THE S. SIDE OF
CONCRETE LIGHT POLE BASE.
B.L. STA. 13+33.70, 178.82' LT.

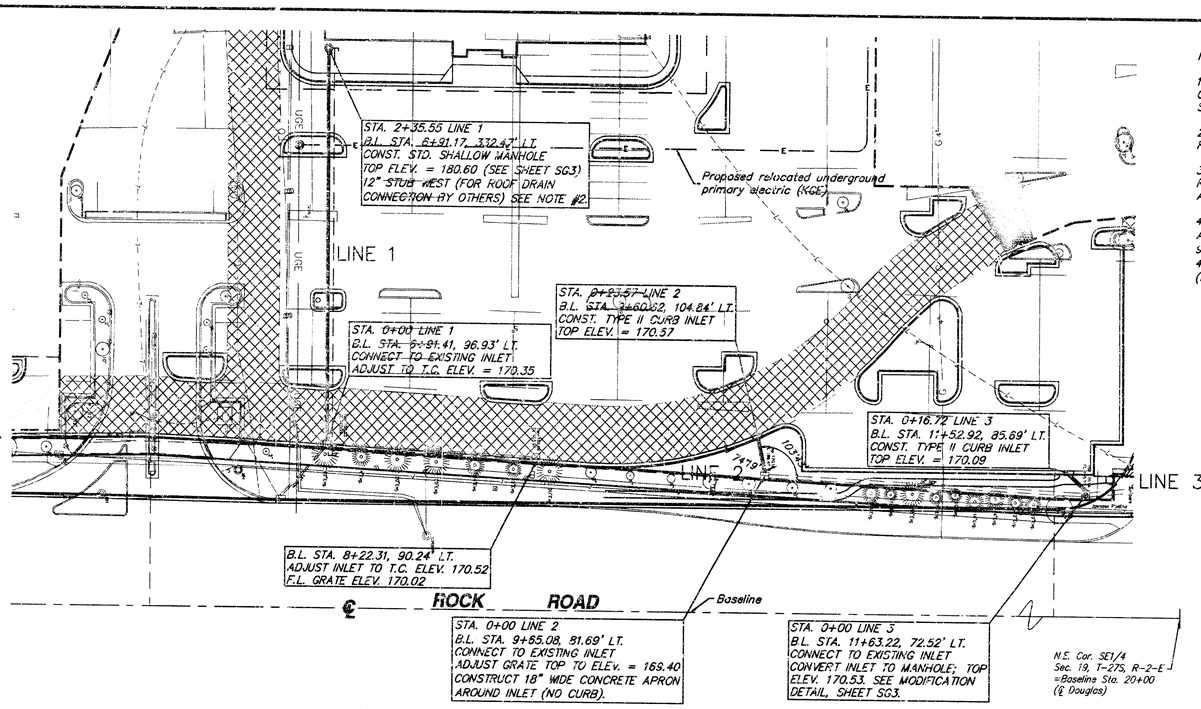

NOTES:

1. ALL STORM SEWER MATERIALS AND CONSTRUCTION TO COMPLY WITH CITY OF WICHITA STANDARD SPECIFICATIONS.

2. CONNECTION OF ROOF DRAIN TO STORM SEWER REQUIRES A PERMIT FROM CITY OF WICHITA.

3. INLET FRAMES AND GRATES MAY BE SALVAGED AND RE-USED IF, IN THE OPINION OF THE ENGINEER, THEY ARE IN GOOD CONDITION.

4. THIS PROJECT INCLUDES MODIFICATION OF MANHOLES AT B.L. STA. 6+58.25, 531.68' LT. AND B.L. STA. 9+17.45, 314.51' LT. AND CURB INLETS AT B.L. STA. 4+43.84, 101.20' LT. AND B.L. STA. 3+12.92, 99.17' LT. (NOT SHOWN ON THIS SHEET, SEE SITE GRADING PLAN).

SRB

SCALE
1" = 40' Horiz. (Plan)
1" = 5' Vert. (Profile)

APPROVED AS NOTED
BY CITY ENGINEER OF WICHITA

Sanitary Sewers _____
Storm Sewers VRH 6/13/00
Driveway Approaches _____
Water Mains _____
Paving _____

NOTE TO CONTRACTORS

Inspection and testing for this project are to be provided by a Licensed Consulting Engineering Firm under contract with the Owner/Developer. Said inspection to be in accordance with the City of Wichita standard construction engineering practices and certified by a Licensed Professional Engineer. No work shall be performed in dedicated easements or public right-of-way by the Contractor without such inspection, nor shall any work be commenced without written authorization by the City Engineer.

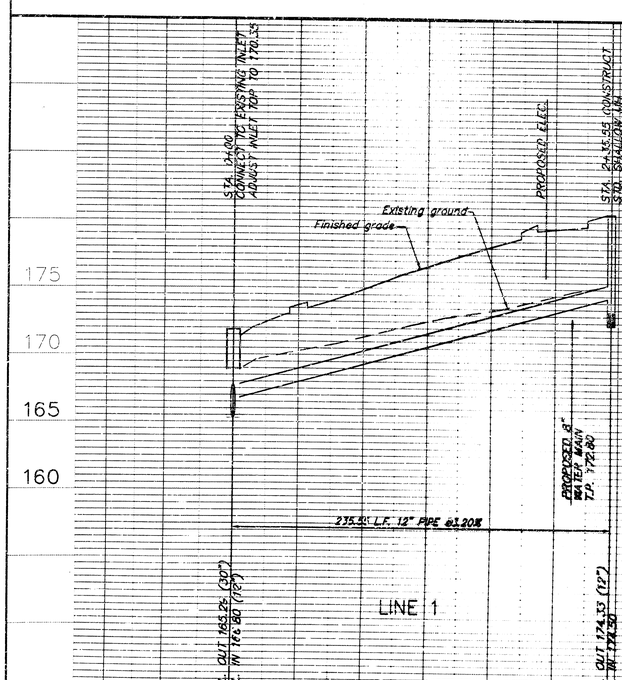

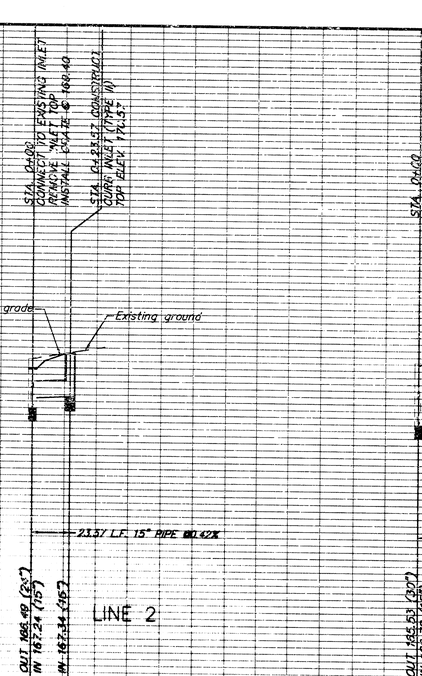

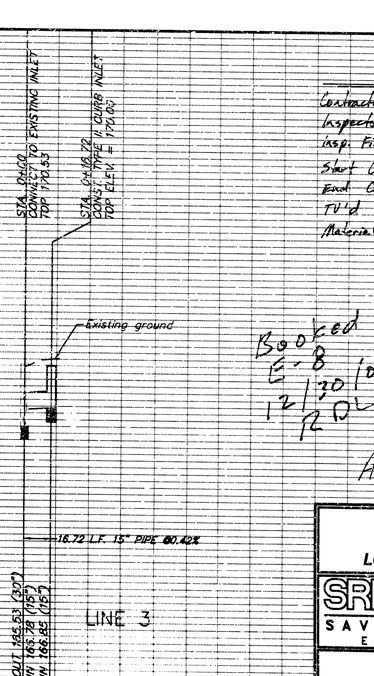

As-Built Information
Contractor: W.B. Carter (Gary Ladd)
Inspector: Tim Kelly (After 2nd mtg.)
Insp. Firm: Savoy, Ruggles & Bohm
Start Const: 06/15/2000
End Const: 07/10/2001
TV'd: 07/19/2001 (Passed)
Material: 236 L.F. 12" RCP
40.5 L.F. 15" RCP
2 - Type II Curb Inlets
1 - Manhole

Booked
E-8
12/20/07
R

As-Builts (Built per plan)
08/14/2001

TOWNE EAST SQUARE
PRIVATE STORM SEWER
LOT 1, KELLOGG MALL ADDITION, WICHITA, KS.

SRB
924 NORTH MAIN
WICHITA, KANSAS 67203
http://www.feist.com/~srb
316-264-6008
FAX 264-4621
E-Mail: srb@feist.com
SAVOY, RUGGLES & BOHM, P.A.
ENGINEERING & SURVEYING

PROJECT NUMBER
1014 PPS (607861)

DESIGN	DRAWN	UTILITY	REVIEW	DATE	REVISED
TCR	JTS	SRB	AMD	Nov. 24, 2000	Nov. 13, 2000

SHEET SG2

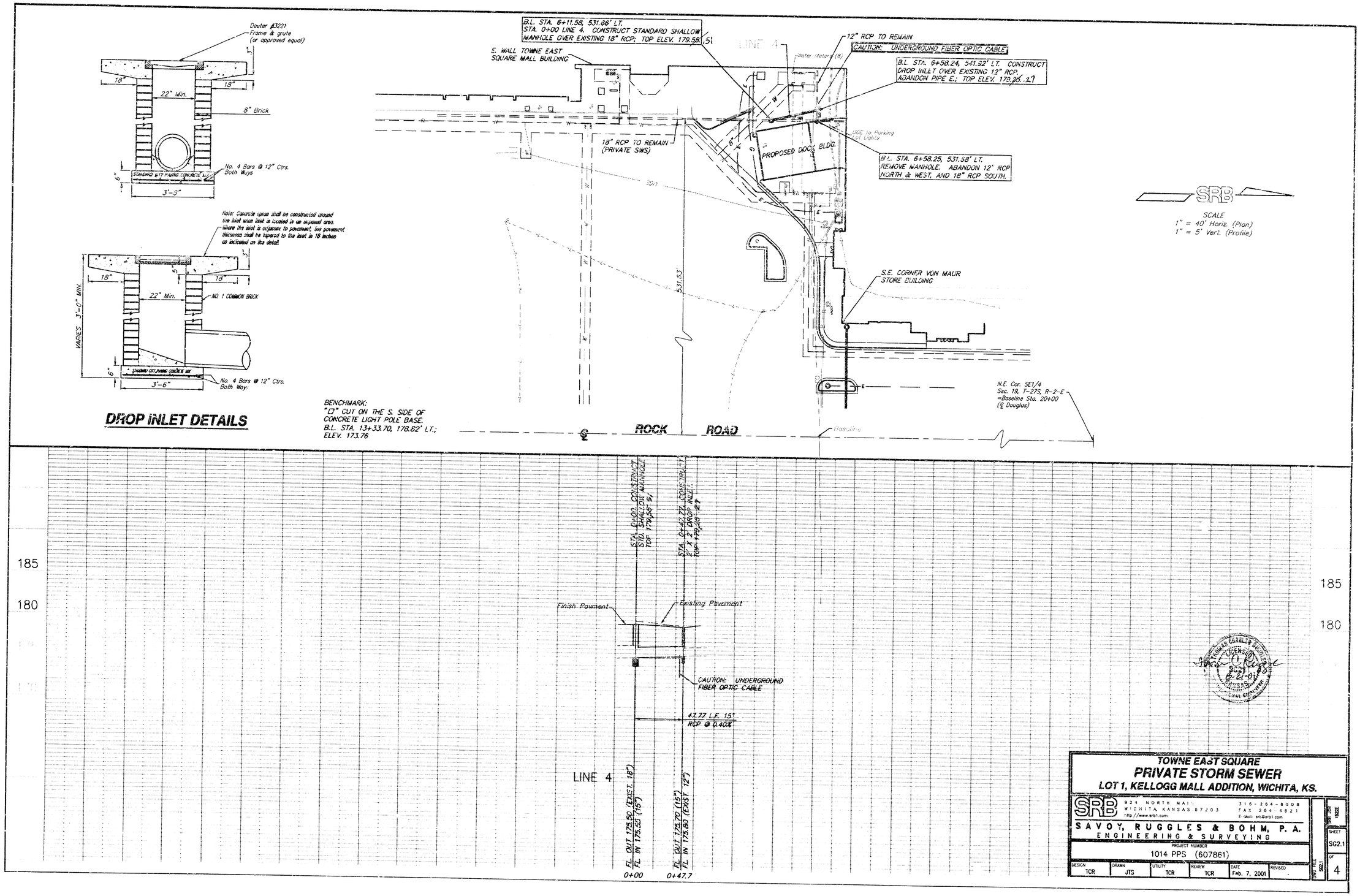

TOWNE EAST SQUARE
PRIVATE STORM SEWER
LOT 1, KELLOGG MALL ADDITION, WICHITA, KS.

SRB 924 NORTH MAIN WICHITA, KANSAS 67203 http://www.srb1.com 316-264-8008 FAX 264-4621 E-Mail: srb@srb1.com

SAVOY, RUGGLES & BOHM, P.A.
ENGINEERING & SURVEYING

PROJECT NUMBER 1014 PPS (607861)

DESIGN	DRAWN	UTILITY	REVIEW	DATE	REVISED
TCR	JTS	TCR	TCR	Feb. 7, 2001	

DWG. FILE SG2.1 SHEET SG2.1 OF 4

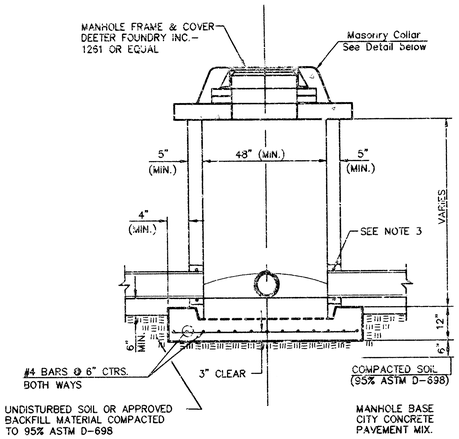

SHALLOW TYPE "P" MANHOLE

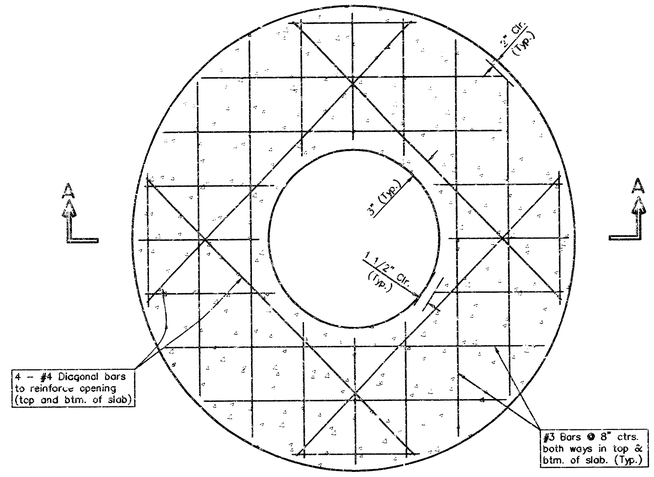

PLAN

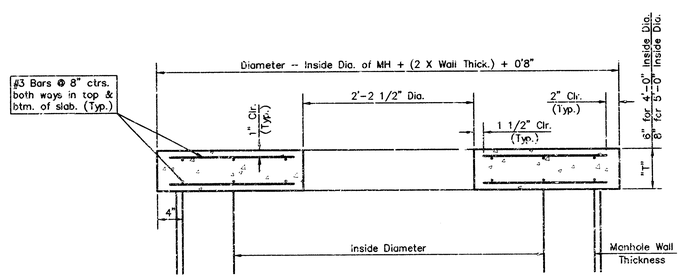

SECTION A-A

CONCRETE SLAB DETAILS

GENERAL NOTES

1. ALL PRECAST CONCRETE MANHOLE SECTIONS SHALL CONFORM TO THE LATEST REVISIONS OF A.S.T.M. C478 AS MODIFIED BY THE SPECIFICATIONS.
2. NON-SHRINK GROUT SHALL BE NON-METALLIC TYPE.
3. APPROVED FLEXIBLE WATERSTOP GASKETS SHALL BE INSTALLED TO JOIN THE SEWER TO THE MANHOLE WALL. WHEN A.B.S. COMPOSITE PIPE OR P.V.C. PIPE IS USED. FOR OTHER TYPES OF PIPE THE SEWER SHALL BE GROUTED IN PLACE WITH NON-SHRINK GROUT. THE SEWER PIPE SHALL BE SUPPORTED WITH CONCRETE ENCASEMENT A MINIMUM OF 3 FEET FROM THE MANHOLE WALL AND TO THE FIRST JOINT FOR V.C.P. SUCH THAT THE JOINT REMAINS FLEXIBLE.
4. ALL INSIDE SURFACES OF THE CONCRETE MANHOLE WHICH WOULD BE EXPOSED TO SEWER GAS SHALL BE COATED WITH 2 COATS THEMEC SERIES 66 HI-BUILD EPOXOLINE, DRY THICKNESS OF 8 MILS (MIN.)
5. EXTERIOR MANHOLE WALLS SHALL BE COATED WITH 1 COAT MOBILARMA 633 BITUMINOUS COATING.
6. JOINT SEALING COMPOUND SHALL BE KENT SEAL NO. 2 OR APPROVED EQUAL.
7. PRECAST MANHOLES SHALL BE SET AT LEAST 4 INCHES INTO THE MANHOLE BASE.
8. TOP OF MANHOLE FLOOR SLAB SHALL BE AT LEAST 3 INCHES BELOW THE FLOW LINE OF THE OUTLET PIPE TO INSURE SUFFICIENT MINIMUM THICKNESS OF SHAPED INVERT.
9. LIFTING HOLES SHALL BE FILLED WITH NON-SHRINK GROUT AND THE INTERIOR SURFACE COATED AS SPECIFIED.
10. MORTAR USED IN MASONRY CONSTRUCTION SHALL CONTAIN 8 SACKS OF CEMENT PER CUBIC YARD. CONCRETE USED IN MANHOLE BASES SHALL CONFORM TO THE REQUIREMENTS OF CONCRETE FOR CONCRETE PAVEMENT CONSTRUCTION AS SPECIFIED IN THE CITY ST NDARD PAVING SPECIFICATIONS USING CITY CONCRETE PAVEMENT MIX WITHOUT AIR ENTRAINING ADMIXTURE. MORTAR SHALL BE PLACED AROUND THE MANHOLE RING AS SHOWN ON THE DRAWINGS WHEN MANHOLES ARE CONSTRUCTED IN UNPAVED AREAS. MANHOLES CONSTRUCTED WHERE PIPE SIZES ARE SMALLER THAN 24" SHALL HAVE AN INSIDE DIAMETER OF 4'. MANHOLES CONSTRUCTED WHERE PIPE SIZES ARE 24" OR LARGER SHALL HAVE AN INSIDE DIAMETER OF 5'. COMPLETED MANHOLE SHALL BE WITHOUT LEAKS AND WATER TIGHT.
11. REINFORCING STEEL SHALL BE INSTALLED IN THE MANHOLE BASES AND SHALL CONSIST OF NO. 4 BARS PLACED ON 6" CENTERS IN BOTH DIRECTIONS. THE MANHOLE BASE REINFORCEMENT SHALL BE PLACED AT LEAST 3" ABOVE THE BOTTOM OF THE MANHOLE BASE. ALL COSTS FOR FURNISHING AND INSTALLING REINFORCING STEEL SHALL BE INCLUDED IN THE UNIT PRICE BID FOR THE MANHOLE.
12. THE FLOORS OF ALL MANHOLES SHALL BE SHAPED WITH FLOW CHANNELS SUCH THAT THE MANHOLES WILL BE SELF CLEANING AND FREE OF AREAS WHERE SOLIDS COULD BE DEPOSITED AS SEWAGE FLOWS THROUGH THE MANHOLE FROM ALL INLET PIPES TO THE OUTLET PIPE. FLOW CHANNELS SHALL BE FORMED TO MATCH THE BOTTOM HALVES OF THE INFLOWING PIPES AND THE OUTFLOWING PIPE AS SHOWN BY THE DRAWINGS EXCEPT FOR INSIDE DROP MANHOLES. FLOW CHANNELS FOR INSIDE DROP MANHOLES SHALL BE CONSTRUCTED AS INDICATED BY THE DRAWING. MANHOLE FLOORS SHALL HAVE SLOPES OF 3 INCHES PER FOOT IN THE AREAS OUTSIDE OF THE FLOW CHANNELS SLOPED TOWARD THE FLOW CHANNELS. PIPES LAID THROUGH MANHOLES SHALL HAVE THE TOP HALF REMOVED TO NEAT LINES FOR THE FULL INSIDE DIAMETER OF THE MANHOLE. MANHOLE FLOORS SHALL THEN BE SHAPED AROUND THE BOTTOM HALF OF THE PIPE WHICH FORMS THE FLOW CHANNEL.
13. PIPES INSTALLED WITHIN THE EXCAVATION MADE FOR THE MANHOLE SHALL BE CRADLED WITH CONCRETE TO THE LIMITS OF THE MANHOLE EXCAVATION. WHEN CLAY PIPE IS USED, THE CRADLE SHALL EXTEND TO THE FIRST JOINT OUTSIDE THE MANHOLE. THE CRADLE SHALL BE TERMINATED AT THE CLAY PIPE JOINT IN A MANNER WHICH WILL MAINTAIN THE FLEXIBILITY OF THE JOINT. COST OF CRADLE WITHIN MANHOLE EXCAVATION OR TO CLAY PIPE JOINTS ADJACENT TO MANHOLE SHALL BE INCLUDED IN THE UNIT PRICE BID FOR THE MANHOLE.
14. MANHOLE COVER CASTINGS AND MANHOLE FRAME CASTINGS SHALL CONFORM TO THE REQUIREMENTS AS INDICATED IN THE STANDARD SPECIFICATIONS AND AS SHOWN IN THE STANDARD DETAIL DRAWING.
15. ALL BRICK USED IN MANHOLE CONSTRUCTION SHALL MEET GRADE SW OF ASTM C652 OR C62-87.

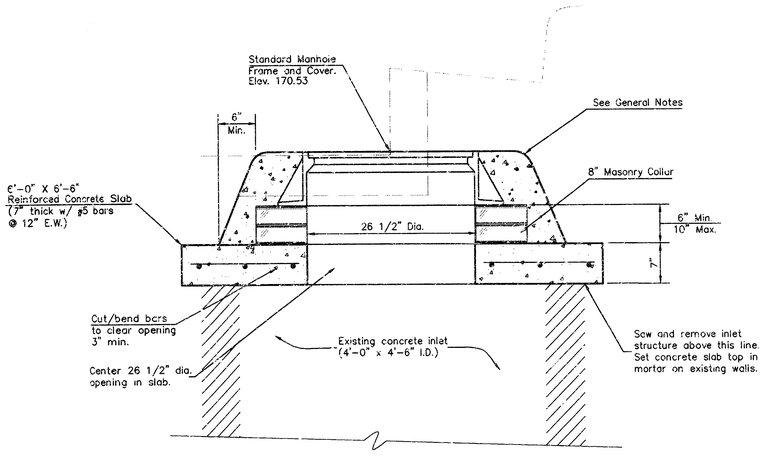

INLET TO MANHOLE CONVERSION DETAIL

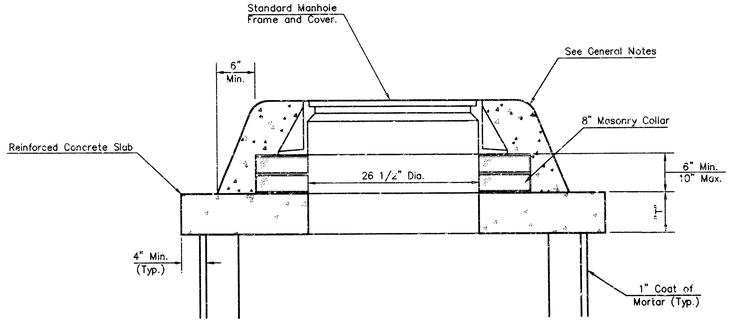

MASONRY COLLAR DETAIL

As-Builts (Built per plan) 08/14/2014

INLET TO MANHOLE CONVERSION AND SHALLOW TYPE 'P' MANHOLE DETAILS

WICHITA, KANSAS

SRB
924 NORTH MAIN
WICHITA, KANSAS 67203
http://www.srb1.com
315-264-8008
FAX 264-4621
E-mail: srb@srb1.com
SAVOY, RUGGLES & BOHM, P.A.
ENGINEERING & SURVEYING

PROJECT NUMBER
1014 PPS (607861)

DESIGN	DRAWN	UTILITY	REVIEW	DATE	REVISED

DWG. FILE Standard

SHEET SG3 OF 3

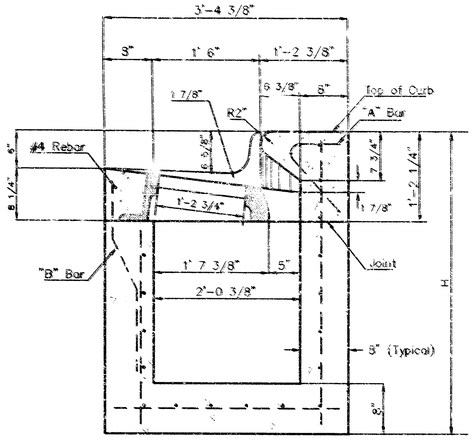

SECTION A–A

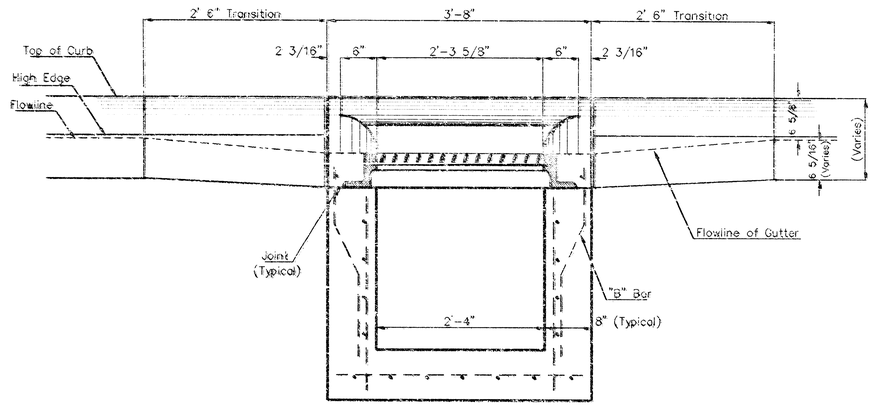

SECTION C–C

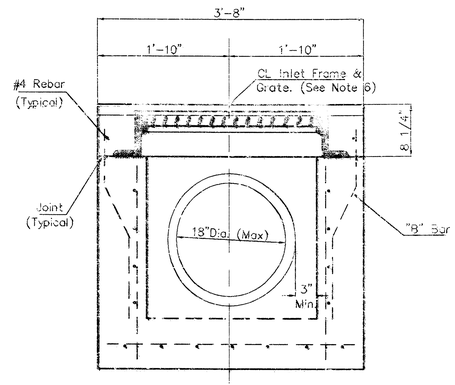

SECTION D–D

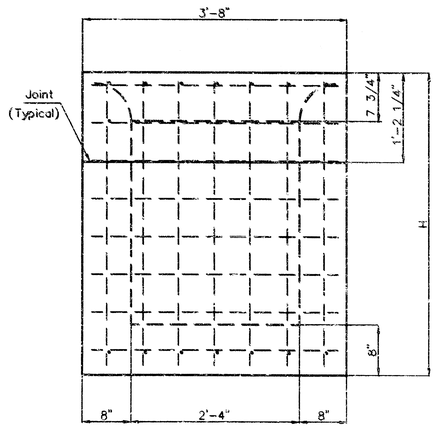

REAR WALL

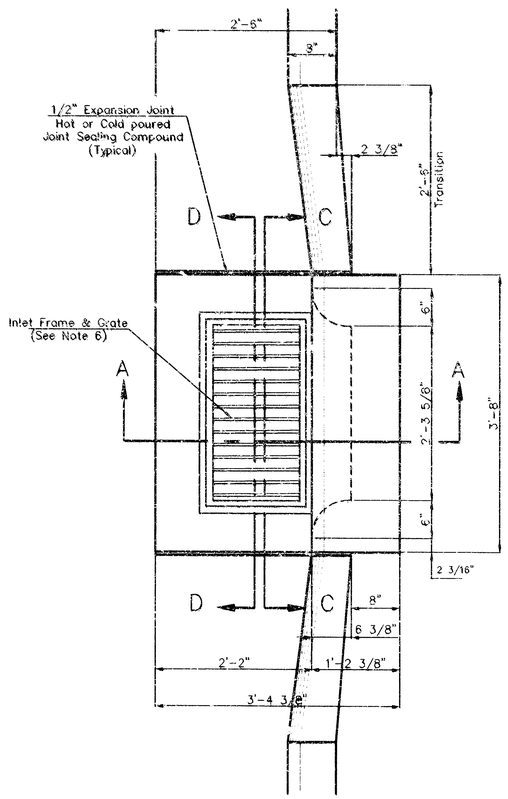

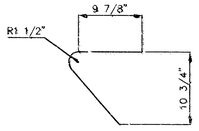

"A" Bar

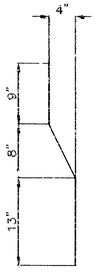

"B" Bar

General Notes

1. Use the concrete mix specified for the City of Wichita concrete pavement throughout. All exposed edges shall be finished with an edging tool. Reinforcing bars shall be bent around pipe.
2. Inlet invert shall be shaped with 8 sack mix concrete to create flow channels and to increase hydraulic efficiency such that the inlet will be self cleaning between all inlet and/or outlet pipes.
3. All bars are #4 with 6" spacing and shall have a minimum clearance of 1 1/2" inches unless otherwise noted on the plans.
4. When directed by the Engineer, a small opening may be required in the back of the inlet in order to drain a low area. Reinforcing bars will extend through the openings. No deductions in concrete quantities will be made for these openings.
5. No deductions will be made in pay length of curb, gutter, or curb and gutter through the inlet area.
6. Use Neenah R-3289 HV Single Inlet Frame and Grate or approved equal. Inlet frame to be proof load tested to 40,000 lbs. on unsupported side.
7. Reinforcing bars shall be cut or bent around pipes. No deduction in concrete quantities shall be made for pipe openings.
8. The vanes of the grate shall be oriented with respect to the flow arrows shown on the plans.

As-Builts (Built per plan) 08/14/2001

THE CITY OF WICHITA

CITY ENGINEER'S OFFICE
CITY HALL - SEVENTH FLOOR
455 NORTH MAIN STREET
WICHITA, KANSAS 67202
(316) 268-4351
(316) 268-4119 FAX

STANDARD TYPE II CURB INLET INLET OPENING = 6"x2'-3 3/8"

M. E. LINDEBAK P.E. – CITY ENGINEER

PROJECT NUMBER	OCA #
1014 PPS	607861
DATE MAR 98	SHEET SG4 OF 3